Equipment Diagrams

CONTROL DATA 8092
TELEPROGRAMMER

Equipment Diagrams

CONTROL DATA 8092
TELEPROGRAMMER

© 1968, CONTROL DATA CORPORATION
Printed in the United States of America

Pub. No. 368 109 00b

RECORD OF REVISIONS

REVISION NUMBER	NOTES
368 109 01 (Rev A)	(4-15-65) Includes ECO's 1163, 1198, 1268, 1334, 1354, 1402, 1403, 1411, 1431, 1470, 1505, and 1585.
368 109 00b (Rev B)	(8-18-66) Includes ECO numbers 2041 and 2085 (Reprinting with revision).
Revision C	(3-10-67) Includes ECO's DP2329 and DP2383.
Revision D	(8-29-67) Includes ECO's DP2055, 2249, 2279, 2500, 2590, 2356, 2329, 2328, 2370, 2365, 2512, 2450, and 2383 (Reprinting with revision).
Revision E	(11-8-67) Incorporated FCO's DP 2329, 2450
Revision F	(1-25-68) Revised to incorporate FCO DP2870. Pages revised: Pages 2, 5, 18.
Revision G	(4-23-68) Reprint with revision. Includes ECO DP2886. Addition of list of terms.
Revision H	(8-15-68) Revised to incorporate FCO DP03130. Page revised: Page 2 of 36042600.
Revision J	(1-30-69) Revised to incorporate ECO DP03333 and to add a schematic for the display panel. New product designations: 8092-A22/-B23/-D08/-E03. Revised Table of Contents, Pages vii, 16, and added pages 28, 29, 30 and 31.

Publication Number
368 109 00

TABLE OF CONTENTS

Page	Title	Drawing Number
1	Block Diagram	364038
2	Main Control	360426
3	Main Timing	364156
4	Registers, F & F' & Translators	360449
5	Function Translators	360427
6	R & Q Inverters	360428
7	Register - A'	364157
8	Registers - A & O	360429
9	Registers - Z	364158
10	Registers - P & P'	360430
11	Register - PSR	364159
12	Register - S & S'	364160
13	Storage Translators	360431
14	Typical Storage Circuits	360442
15	Register - Tag 1, 2, and 3	360433
16	Input/Output Control	360425
17	Interrupt	360434
18	Buffer Controls	360447
19	Registers - BFR,BXR,BER	360432
20	Control Console	360437
21	Power Supply - 8606A	364071
22	Cabling & AC-DC Dist.	360441
23	8092 Display Schematic Note: For units having display panel (part number 47000000), use this schematic.	47032300
27	8092 Display Schematic Note: For units having display panel (part number 47091200), use this schematic.	47094800
31	Power Supply Schematic (8092-D/-E)	47046500

8092 TERM LIST

Logic Symbol	Function	Page
A000, A010, A070	A Register	8
A100, A110, A170	A' Register	7
C000- C007	Clocks	13
E000, E010-,E070	Stage Enable (SE) F/F's	6
E001, E011-,E071	No Stage Enable (SE) F/F's	6
E200, E201, E202	Group Enable (GI) A' Register	7
E300, E301, E302	Group Borrow Generators (GBG) A' Register	7
E400, E401, E402	Group Borrow Input (GBI) A' Register	7
E500, E501-, E507	Stage Probe Input (SPI) A' Register	7
F002	XXX XX0	4
003	XXX XX1	4
012	XXX X0X	4
013	XXX X1X	4
014	XXX X0X	4
015	XXX X1X	4
022	XXX 0XX	4
023	XXX 1XX	4
025	XXX 1XX	4
031	XX0 XXX	4
041	X0X XXX	4
042	X0X XXX	4
050	1XX XXX	4
052	0XX XXX	4
053	1XX XXX	4
054	XXX 100	4
056	XXX 000	4
057	XXX X11	4
059	XXX 1XX, $\overline{\text{XXX 111}}$	4
060	XXX X10	4
061	XXX 001	4
062	XXX 010	4
063	XXX 011	4
064	XXX 100	4
065	XXX 110	4
066	XXX 111	4
067	XXX X01	4
068	XXX X00	4
069	XXX X10	4
070	XXX 00X	4
071	XXX 001	4
072	XXX 010	4
073	XXX 011	4
074	XXX 100	4
075	XXX 110	4
076	XXX 111	4
077	XXX X01	4
078	XXX 00X	4
079	XXX 1X1	4
080	000 XXX	4

Logic Symbol	Function	Page
F081	001 XXX	4
082	01X XXX	4
083	01X XXX	4
084	100 XXX	4
085	101 XXX	4
086	110 XXX	4
087	111 XXX	4
088	000 XXX	4
089	000 XXX	4
090	001 XXX	4
091	100 XXX	4
092	101 XXX	4
093	101 XXX	4
094	110 XXX	4
095	110 XXX	4
096	111 XXX	4
097	111 XXX	4
098	111 XXX	4
099	111 XXX	4
101	X1X XXX XX	4
112	000 XXX	4
114	111 XXX	4
115	111 1XX, $\overline{\text{111 111}}$	4
120	111 01X	4
121	111 01X	4
122	111 01X	4
123	111 01X	4
124	111 101	4
125	111 101	4
127	111 01X	4
130	000 101	4
131	XXX 1X1	4
132	0X1 XXX	4
133	0X1 XXX	4
134	011 XXX	4
F200	$\overline{G \rightarrow [(\text{Ent.} + \text{Swp.})\ (\text{SSI})]}[(4X + SX.C^{\prime})$	5
F206	$\overline{(\text{SSI})\ (\text{OBA}) + C\ [(\text{Ent.} + \text{Swp.})\ (\text{SSI})]}$ $\overline{(4X + 5X.C^{\prime} + 76) + 72.C^{\prime}B\ [(\text{Ent.} + \text{Swp.})}$ $\overline{(\text{SSI})]}\ A\ (\text{Ent})(\text{Swp.})\ (\text{SSI}) + D[(\text{Ent.} + \text{Swp.})$ $(\text{SSI})] + (\text{Swp.})$	5
F208	(Buff BSY) (04 + 05 + 70 + 71) + 6X (Jump SAT)	5
F209	$\overline{\text{F208}}$	5
F211	$6X\ (\overline{\text{Jump SAT}}) + (\overline{\text{Buff BSY}})\ (04 + 05 + 70 + 71)$	5
F213	$\overline{17 + 23 + 24} + 27 + 33 + 37 + 44 + 45 + 46 +$ $47 + 52 + 56$	5
F214	$31 + 35 + 41 + 45 + 51 + 55 + 72.\overline{C^{\prime}} + 73.\overline{C^{\prime}}$	5

Logical Symbol	Function	Page
F216	$\overline{(\text{Ent.} + \text{Swp.})\ (\text{SSI})}\ \overline{B\ (11 + 15 + 41 + 45 + 51 + 55 + 72.C' + 73.C')} + C\ (\text{load} + 00 + 04 + 05 + 10 + 14 + 20 + 24 + 30 + \overline{34 + 6X + 70 + 71 + 72 + 73 + 74 + 75}) + A\ \overline{(\text{Ent.})\ (\text{Swp.})\ (\text{SSI})} + D\ (\text{Ent.} + \text{Swp.})\ (\text{SSI}) + (\text{Ent.} + \text{Swp.})$	5
F222	$\overline{(\text{Ent.} + \text{Swp.})\ (\text{SSI})}\ (B\ (11 + 15 + 41 + 45 + 51 + 55 + 72.C' + 73.C') + C\ (\text{Load} + 00 + 04 + 05 + 10 + 14 + 20 + 24 + 30 + \overline{34 + 6X + 70 + 71 + 72.C' + 73.C' + 74 + 75}) + A\ \overline{(\text{Ent.})\ (\text{Swp.})\ (\text{SSI})} + D\ \overline{(\text{Ent.} + \text{Swp.})\ (\text{SSI})} + (\text{Ent.} + \text{Swp.})$	5
F226	$12 + 16 + 22 + 26 + 32 + 36 + 42 + 46$	
F229	$11 + 12 + 13 + 15 + 16 + 17 + 22 + 23 + 26 + 27 + 31 + 32 + 33 + 35 + 36 + 5X.C' + 4X$	5
F232	$04 + 05 + 20 + 21 + 22 + 23 + 30 + \overline{31} + \overline{32} + 33 + 5X + 70 + 72 + 74 + 75 + \overline{1X} + \overline{4X} + \overline{6X}$	5
F233	$\overline{72 + 73 + 75}$	5
F235	01	5
F236	$5X + 72 + 73 + 75$	5
F239	$\overline{5X.C' + 75.C' + (72 + 73)\ (A'\ \ 0)\ (\text{I/O Seq.})}$	5
F242	$(\text{Load}) + 6X\ (\text{Jump SAT}) + 40 + 44 + 77 + (\text{Buff BSY})\ (04 + 05 + 70 + 71)$	5
F243	$C' + 55 + 75$	5
F248	$A/0$	5
F251	Jump SAT	5
F252	$\overline{\text{Jump SAT}}$	5
F256	$20 + 21 + \overline{22 + 23 + 30 + 31} + 32 + 33 + (72 + 73)\ C\ \overline{(\text{Ent.} + \text{Swp.})\ (\text{SSI})}$	5
F261		5
F271	13	5
F300	$\overline{\text{Adv. } P_1 \text{ by } 1}$	5
F301	$\overline{P_2 - P_1}$	5
F302	$\overline{P \rightarrow S,\ P' \text{---} S'}$	5
F303	$\overline{5.C'}$	12
F304	$\overline{Z \rightarrow S}$	5
F305	$\overline{\text{Tag} \rightarrow S'}$	5
F306	$\overline{A \rightarrow S}$	5
F307	$\overline{\text{MCS} \rightarrow Z}$	5
F308	$\overline{\text{INP} \rightarrow Z:\ \overline{(\text{Ent.} + \text{Swp.})}\ (\overline{\text{SSI}}\ \overline{B.72.C' + C(\text{load})})}$	5
F310	$\overline{\text{Clear F/F'}}$	

Logic Symbol	Function	Page
F311	$\overline{Z \rightarrow F/F'}$	5
F313	$\overline{Z \rightarrow Ou}$	5
F315	$\overline{+Z \rightarrow R}$	5
F316	$\overline{-Z \rightarrow R}$	5
F317	$\overline{+1 \rightarrow R}$	5
F318	$\overline{A \rightarrow R}$	5
F319	$\overline{A \rightarrow Q}$	5
F320	$\overline{A.2' \rightarrow Q}$	5
F321	$\overline{+1 \rightarrow Q}$	5
F322	$\overline{\text{Block Probe A'}}$	5
F323	$\overline{A' \rightarrow A}$	5
F324	$\overline{A \rightarrow \text{Tag Reg}}$	5
F325	$\overline{\text{Tag Reg} \rightarrow A}$	5
F326	$\overline{A \rightarrow \text{BER}.\ I_3 \rightarrow \text{BER}}$	5
F327	$\overline{A \rightarrow \text{BXR},\ I_3 \rightarrow \text{BXR}}$	5
F328	$\overline{\text{BER} \rightarrow A}$	5
F329	$\overline{A' \rightarrow P,\ \text{Tag} \rightarrow P'}$	5
F331	$\overline{\text{INP} \rightarrow Z:\ \overline{76} + \overline{C} + (\text{Ent} + \text{Swp}) + (\text{SSI})}$	5
F332	$01 + \overline{D} + (\text{Ent.} + \text{Swp}) + (\text{SSI})$	7
F580	$70 + 71$	18
F502	$\overline{\text{Load} + (\overline{\text{Clear F/F'}}) + (\text{Ent} + \text{Swp})}\ \ (70 + 71)$	18
F503	$\overline{(\overline{\text{Load}})\ (\text{Clear F/F'})\ (\text{Ent} + \text{Swp})}\ \ (70 + 71)$	18
G000 - G207	Read Write Drivers	13
H000 - H007	Plain Timing Delay's	3
H201 - H231	SSC Timing Delay's	2
I001 - I005	Z Register	9
I006	Enables -- S	12
I011 - I015	Z Register	9
I016	S Register	12
I021 - I025	Z Register	9
I026	S Register	12
I031 - I034	Z Register	9
I036	S Register	12
I041 - I045	Z Register	9
I046	S Register	12
I051 - I055	Z Register	9
I056	S Register	12
I061 - I065	Z Register	9
I066	S Register	12
I071 - I075	Z Register	9

Logic Symbol	Function	Page
I076	S Register	12
I200 - I219	A Register	8
I300 - I369	Tag Register 1, 2, 3	15
I400 - I401	A' Register	7
I402	A' ≠ 0	7
I403	A' = 0	7
I404 - I414	0 Register	8
I500 - I538	BFR, BER, BXR	19
I519	BER = BXR	
I550	A (Ent) (Swp) (SSI) + B (Ent + Swp) (SSI) + (74 + 75 + 76) [(D (Ent + Swp) (SSI)] (Load + [(Ent. + Swp) (13) (00 + 01 + 02 + 03 +06 + 07 + 77) (011 5X (Jump SAT) + (04 + 05 +70 + 71) (Buff BSY)] + C (Ent + Swp) (SSI) (55 + 75)	18
I551	(IBA) + (OBA)	18
I554	(Buffer Cycle)	18
I560	BFR → Buff Output Cable (B. O. C)	18
I561	Z → B.O.C.	18
I562	Z → B.O.C.	18
I570	(Buff RDY) + (IBA) + (input RDY)	18
I571	INP → BFR	18
I573	(Buffer Cycle) + (OBA) + (Time 22)	18
I574	MCS → BFR	18
I577	Buff INP Cable → Z	18
I580	Clear Buffer Controls	18
I582	Clear Buffer	18
I588	(Buffer Busy)	18
I590	(SSI)	18
I593	(Buff Cycle)	18
I852	(Int. 10, 20, 30, 40)	17
I853	Block P → S	17
I857	(Block P → S) (I/O Seq) (Ent + Swp) (Load) (13)	17
I859	(Master Clear) (Time 26) (D (Ent + Swp) (SSI)	17
I860	Clear P, P'	17
I861	Interrupt Address → S	17
I862	(Int. 10, 20, 30, 40)	17
I863	Interrupt Address Enable → S	17 & 12
I872	Interrupt Address → PSR	17
J000 - J031	Main Control Timing	2
J100 - J103	Main Control Timing	3
J103	Recirc	

Logic Symbol	Function	Page
J104 - J107	Main Timing	3
J109 - J111	I/O Control	16
J107	Timing Error Stop	2
J200	A + (Ent) + (Swp) + (SSI)	2
J211 - J212	B [(Ent. + Swp.) (SSI)]	2
J221 - J222 - J223	C [(Ent. + Swp.) (SSI)]	2
J224 - J225 - J226	C'	2
J227 - J228	C'	2
J231 - J232 - J233	D (Ent. + Swp.) (SSI)	2
J235		2
J243		2
J400 - J440	I/O Control	16
J441	(I/O Seq. Set)	16
J446	(Load) + B [(Ent. + Swp) (SSI)]	16
J560	(Main Timing Fault)	2
J562 - J565	Storage	13
J900	(Master Clear)	3
J901 - J902 - J903		
J904	(Master Clear)	3
J907	(Master Clear (Clear Z)	3
J908	(Master Clear) (Clear P)	3
J909 - J910	Clear P'	3 & 10
J912	Load	3
J913	Load	3
J914	Enter	3
J917 - J921	(Enter + Sweep)	3
J923	Load	3
J930	(Master Clear)	3
K000 - K002	Timing Chain Excursion Counters	2
K010 - K013		
K100	Divert	13
K110	Read	13
K120	Write	13
K130	Inhibit	13
K140	Timing Fault	2
K200	A Cycle	2
K210	B Cycle	2
K220	C Cycle	2
K222 - K224	C' Cycle	2
K230	D Cycle	2
K240	Block $P_2 = P_1$	3
K320	Wait Output	16
K322	Function Ready	16
K420	Wait Input	16

Logic Symbol	Function	Page
K440	I/O Seq.	16
K522	Sample	16
K524	Enable	16
K800 - K802 - K810 K812	Resync. Counter	2
K850	Manual Interrupt	16
K852	Manual Interrupt	16
K854	Manual Interrupt 10	16
K856	Buffer Interrupt	16
K858	Buffer Interrupt 20	16
K860	External Interrupt 30	16
K862	External Interrupt 40	16
K864	Interrupt Lockout	16
K900	Run	3
K902	Step	3
K904	Neutral	3
L000 - L010 - L110	0 Register Inputs	8
L321	Information Ready	16
L322	Function Ready	16
L323	Master Clear	16
L330	I/O Sequence	16
L331	Load Mode	16
L421	Input Request	16
L500 - L510 - L610	BFR Outputs	19
L512	Information Ready	18
L513	Input Request	18
L514	Function Ready	18
L515	Master Clear	18
M000 - M010 - M070	Z Register Inputs	9
M330	Output Resume	16
M420	Input Ready	16
M424	Input Disconnect	16
M500 - M510 - M570	BFR Inputs	19
M512	Output Resume	18
M513	Input Ready	18
M514	Input Disconnect	18
M850	Manual Interrupt Input	17
M851 - M852	External Interrupt Input	17
M900	Run	3
M901	Step	3
M902	Neutral	3
M903	Load	3
M904	Master Clear	3
M905	Clear A	3
M906	Clear Z	3
M907	Clear P	3
M908	Enter	3
M909	Sweep	3
N000 - N005	Timing Control	2
N210	Clear A' : $\overline{N212}$	7
N212	$\overline{[(A \rightarrow Tag) + D + (Ent. + Swp.) + (SSI)]}$ (Time 01)	7
N230	Toggle A': $\overline{N232}$	7
N232	$\overline{[(A \rightarrow Tag) + \overline{D} + (Ent. + Swp) + (SSI)]}$ (Time 23)	7
N800 - N801	Clocks	2
0000 - 0010 - 0050	0 Register	6
P000 - P010 - P070	P_1 Register	10
P002 - P012 - P072	P_2 Register	10
P100 - P110 - P120 P130	P_1 Register	10
P102 - P112 - P122 P132	P_2 Register	10
P200 - P314	PSR - Register	11
Q000 - Q010 - Q070	Q Inverters	6
R000 - R010 - R070	R Inverters	6
S000 - S010 - S050	Divert F/F's, S Register	13/12
S060 - S070 S100 - S110 - S120 S130	R/W Driver F/F's, S Register R/W Drive F/F's, S'Register	13/12 13/12
T000 - T507	Storage Translators	13
U000 - U010 - U070	Stage Borrow F/F's (SB)	6
V000 - V046	Timing	3
V201 - V231	Storage Sequence Control	2
V521	I/O Start of Timing	16
V901 - V903	Resync Timing	2
W000 - W005	Adv. P_1 by 1	10
W020 - W023	Clear S and S'	12
W024	Adv. BER: $\overline{(Buff\ Cycle)}$ (time 13)	19
W028	$\overline{ADV.\ BER}$	19
W058	IO-6 $\rightarrow$ S	12
W070 - W073	$P_1 \rightarrow P_1$ $P_1 \rightarrow P_2$, $P_1 \rightarrow P_2$	10
W100	Clear Z	9
W102	Strobe	9
W110	Enable Z $\rightarrow$ S	12/17
W122 - W124	Input $\rightarrow$ Z	9
W130 - W160	Clear F, Z $\rightarrow$ F	4

Logic Symbol	Function	Page
W162 - W164	Z → 0	8
W200 - W314	R & Q Inverters	6
W250 - W264	A' → A, BER → A, TAG → A	8
W266 - W269	A → BER	19
W320 - W327	Z Register	9
W330 - W363	BXR	19
W364 - W368	TAG 1, 2, 3	15
W370 - W375	(Buff Cycle) (Time 02)	19
W460 - W464	A' → P, TAG → P'	10
W800	P --P'	11
W810	$\overline{13}$ + (Load) + ($\overline{\text{Clear F}}$) + (Ent. + Swp) + ($\overline{\text{Time 23}}$)	11
W813	13 ($\overline{\text{Load}}$) (Clear F) ($\overline{\text{Ent. + Swp.}}$) ($\overline{\text{Time 23}}$)	11
X000 - X010 - X020 X030	Tag 1 Register	15
X100 - X110 - X120 X130	Tag 2 Register	15
X200 - X210 - X220 X230	Tag 3 Register	15
X500	Block Seq. Interrupt (F/F)	18
X502	Storage Seq. Interrupt (SSI) (F/F)	18
X504	Buffer Cycle (F/F)	18
X506	Buffer Ready (F/F)	18
X508	Buffer Input (IBA) (F/F)	18
X510	Buffer Output (OBA) (F/F)	18
X512	Buffer Step (F/F)	18
X514	Initiate Buffer Output (F/F)	18
X516	Buffer Busy (F/F)	18
X518	Buffer Sync. (F/F)	18
X700 - X710 - X770	BFR Register	
X800 - X810 - X890	BXR Register	19
X900 - X910 - X990 X902 - X912 - X992	BER Register	19
Y006 - Y507	Storage	13
Z000 - Z010 - Z070	Z Register	9

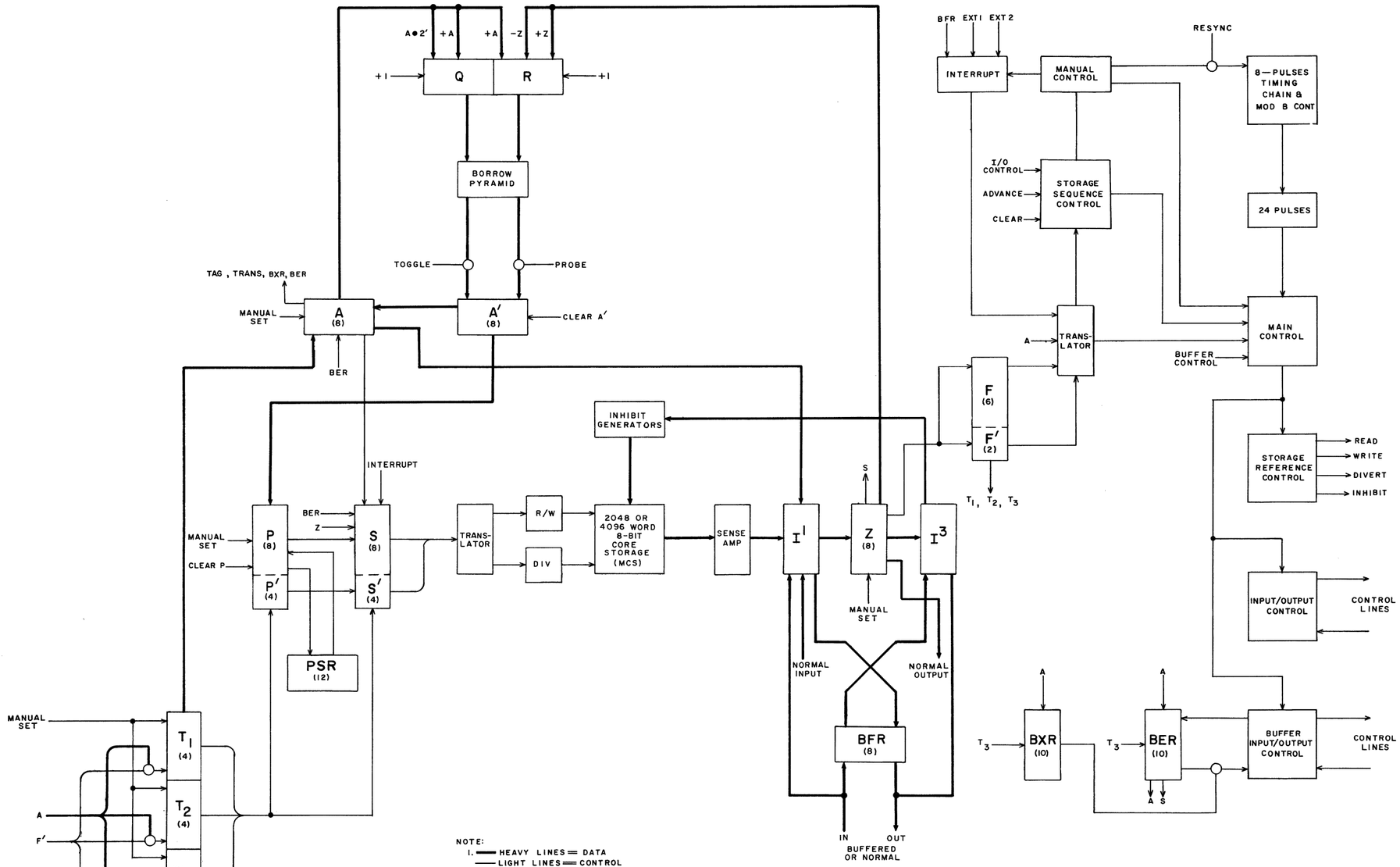

REV.	NOTE	DATE	REVISIONS	APPROVED	CHECKED	DRAWN	DESIGNED
A	585	5-15-64	REL.	-	W.E. Moe	W.E. Moe	L.F. Peterson

REFERENCE DRAWINGS

COMPONENTS (UNLESS OTHERWISE INDICATED)

	TOLERANCE	VALUE	SIZE
RESISTORS			
CAPACITORS			

TITLE: BLOCK DIAGRAM, TELEPROGRAMMER— MODEL 8092

CONTROL DATA CORPORATION
I D P DIVISION

PROJECT OR PRODUCT

DRAWING NUMBER: 364038

REV: A

PAGE: 1

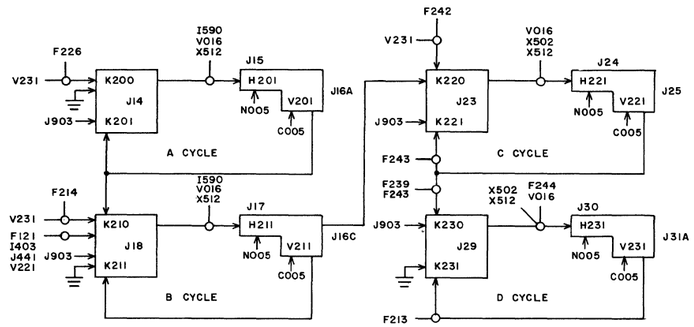

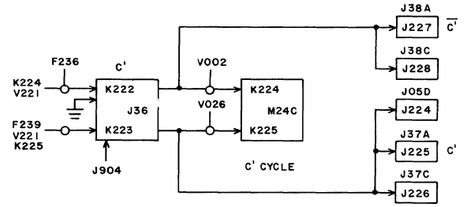

STORAGE SEQUENCE CONTROL (SSC)

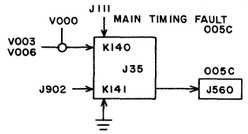

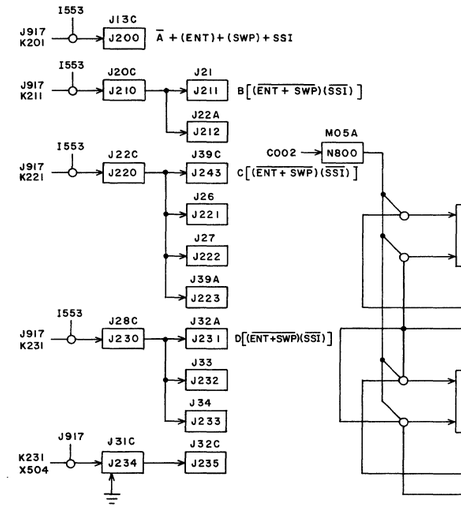

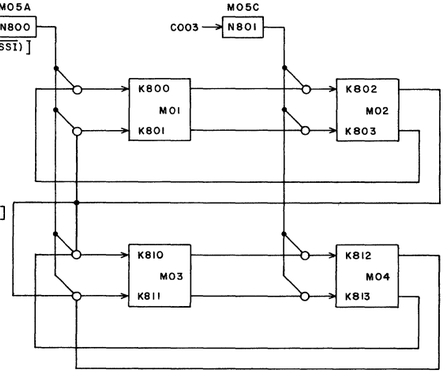

RESYNC COUNTER

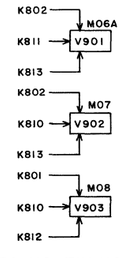

RESYNC TIMING

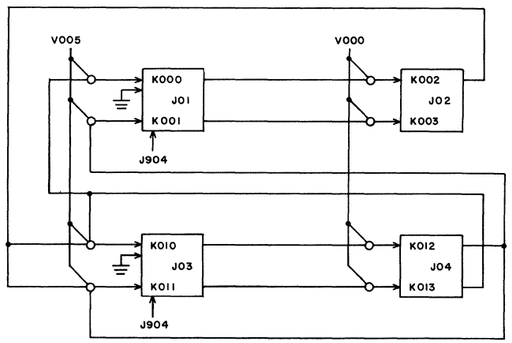

TIMING CHAIN EXCURSION COUNTER (EK)

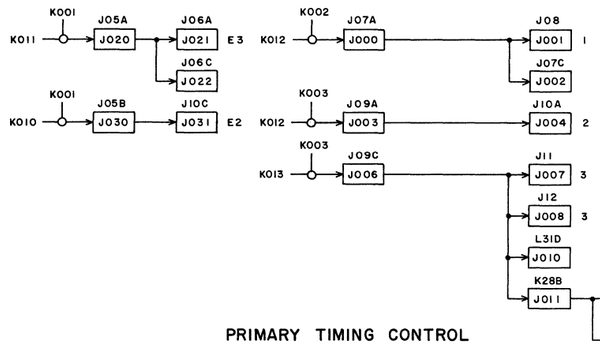

PRIMARY TIMING CONTROL

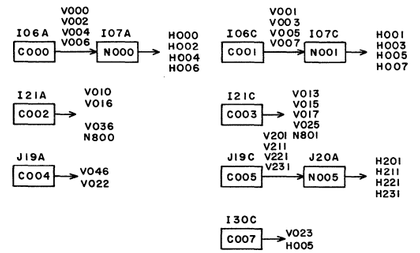

CLOCK

REV.	DATE	REVISIONS	DSN.	CHK.	APPROVED
D	3/30/64		K.H.	R.H.	
C	2/27/64		J.A.P.	E.W.	E.W.
B	2/3/64		W.R.	W.B.	
A	1/15/64	P-15	K.H.		

APPROVED - Wm. Mann 2/24/64
CHECKED - J.H. NIPP 2/24/64
DRAWN - N.K. BECK 2/21/64
DESIGNED -

REFERENCE DRAWINGS

COMPONENTS (UNLESS OTHERWISE INDICATED)

	TOLERANCE	VALUE	SIZE
RESISTORS			
CAPACITORS			

TITLE
LOGIC DIAGRAM,
MAIN CONTROL

CONTROL DATA CORPORATION
I D P DIVISION

PROJECT OR PRODUCT
8092 TELEPROGRAMMER

DRAWING NUMBER 36042600 REV D

SHT PAGE 2

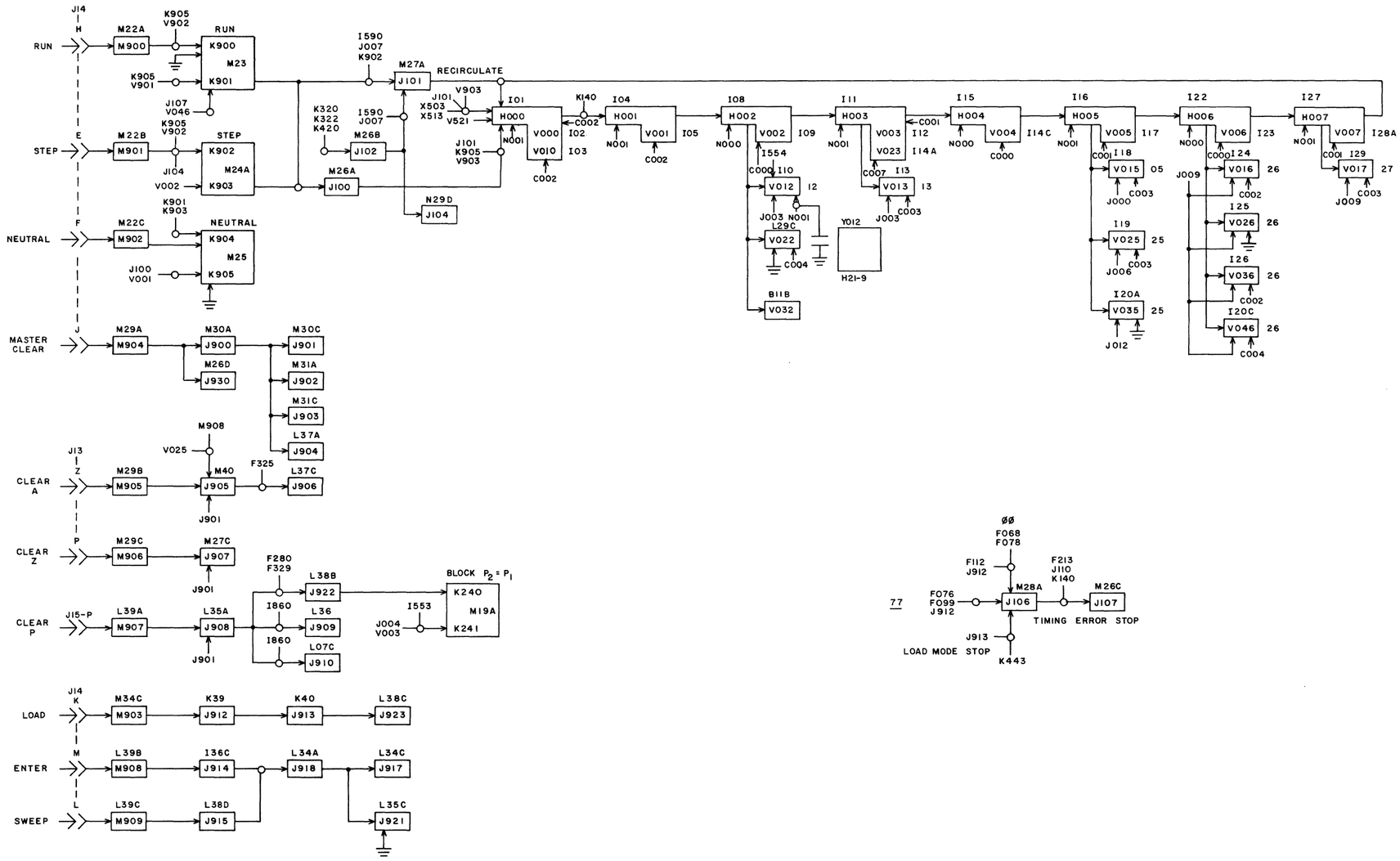

REVISIONS					
REV.	ENGR.	DATE	BEG.	DIR.	CHK.	APPROVED
C	2041	5-14		KH		
B	1585	3-15-65				
A	11984	-3911		WMB		

APPROVED	W.D. Moe
CHECKED	J.H. NIPP
DRAWN	N.K. BECK
DESIGNED	-

2/24/64
2/24/64

REFERENCE DRAWINGS

COMPONENTS (UNLESS OTHERWISE INDICATED)	TOLERANCE	VALUE	SIZE
RESISTORS			
CAPACITORS			

TITLE

LOGIC DIAGRAM, MAIN TIMING

CONTROL DATA CORPORATION

I D P DIVISION

PROJECT OR PRODUCT

8092 TELEPROGRAMMER

DRAWING NUMBER 364156 REV C

SHT PAGE 3

F REGISTER

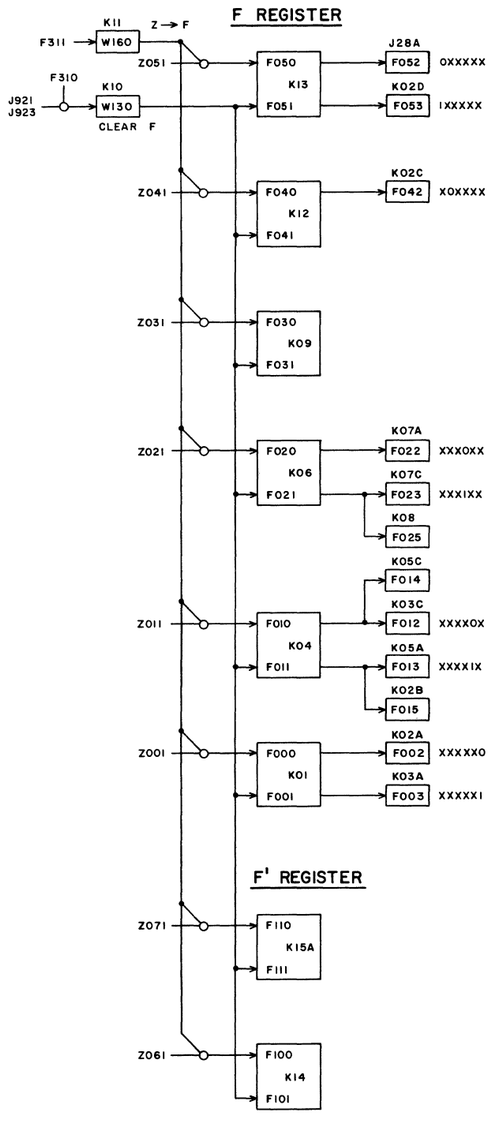

F' REGISTER

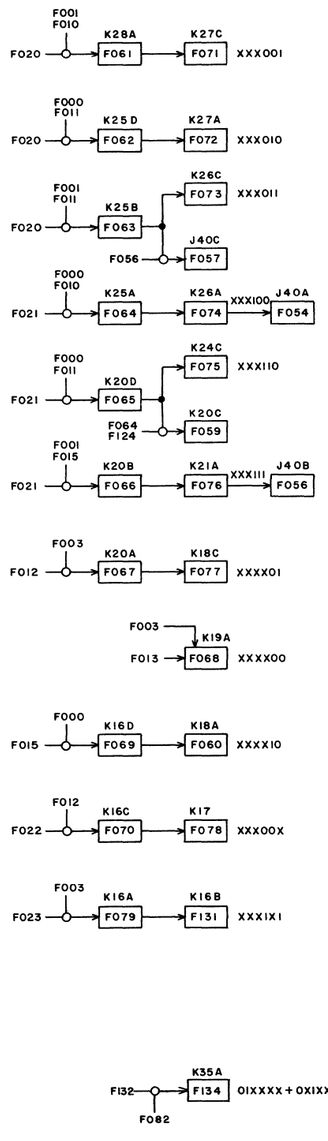

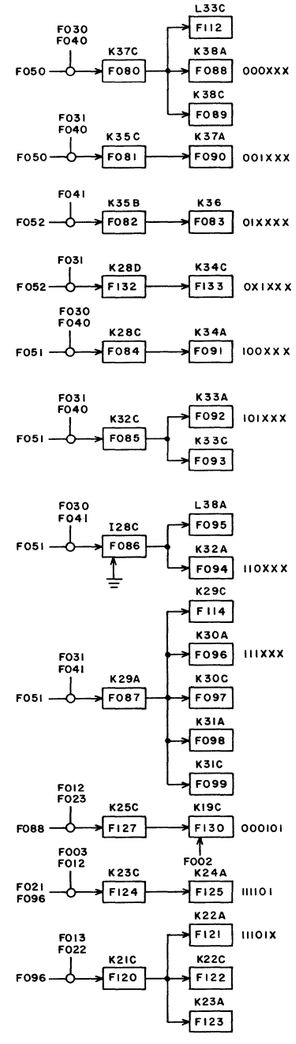

REV	AUTH.	DATE	REVISIONS	DATE	CHK.	APPROVED
C	2041	3-17			RW	R. Stiles
B	1585	3-15-68			KH	D.P. Wallace
A	1453	10-22-67			JK	J.M. Nipp

APPROVED	W.B. Moe	2-26-64
CHECKED	J.H. NIPP	2/24/64
DRAWN	N.K. BECK	2/14/64
DESIGNED		

REFERENCE DRAWINGS

COMPONENTS (UNLESS OTHERWISE INDICATED)

	TOLERANCE	VALUE	SIZE
RESISTORS			
CAPACITORS			

TITLE

LOGIC DIAGRAM,
REGISTERS, F & F' & TRANSLATORS

CONTROL DATA CORPORATION
I D P DIVISION

PROJECT OR PRODUCT
8092 TELEPROGRAMMER

DRAWING NUMBER 360449 REV C

SHT PAGE 4

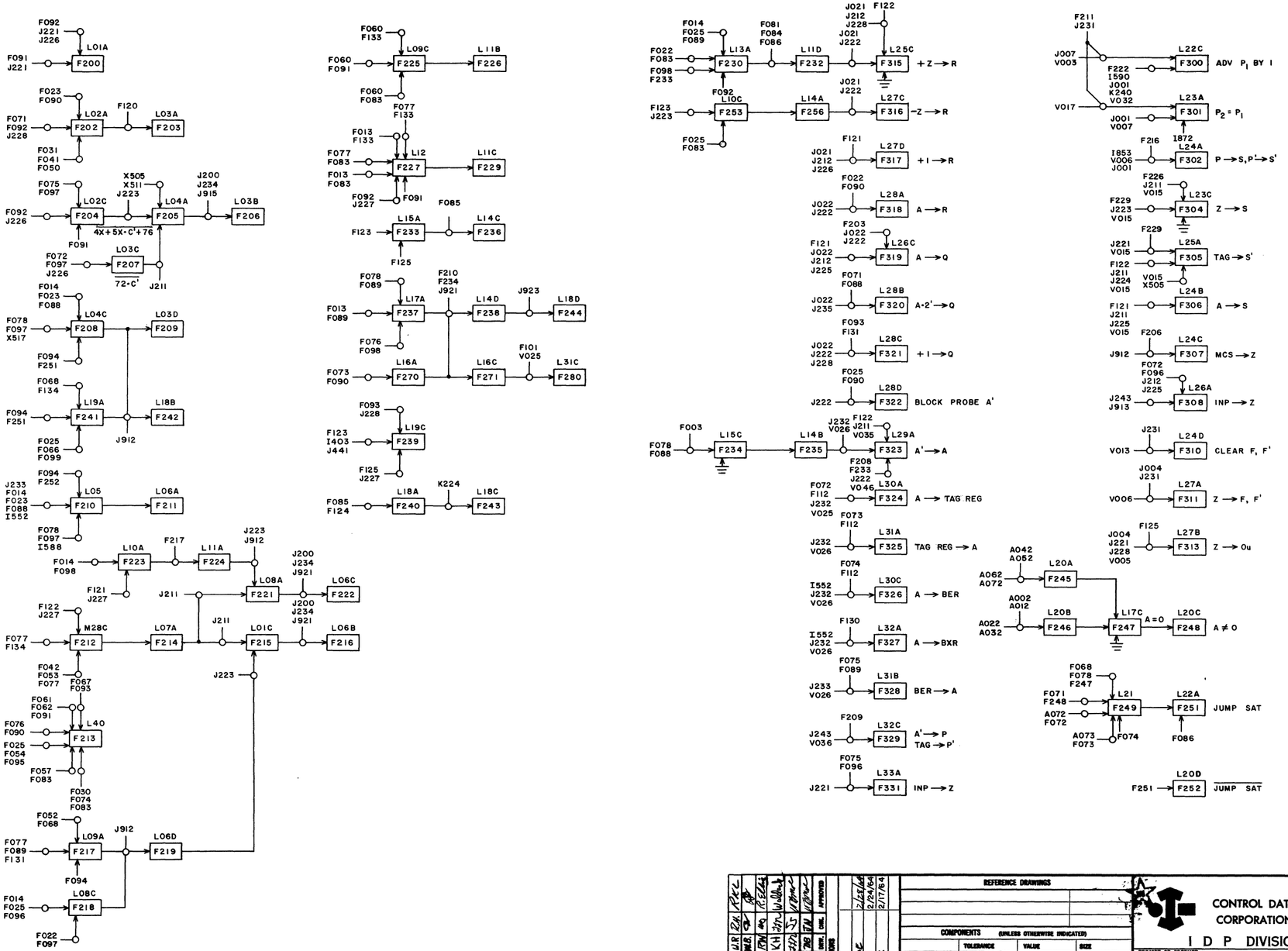

REVISIONS					
REV.	APPR.	REL. DATE	DWG. CHG.	APPROVED	
A	1544	3-4-64	1	2/25/64	
B	1611	3-16-64	2	2/24/64	
C	1585	3-16-64	3	2/17/64	
D	2141	3/27			
E	2329	8/5			
F	2870	11-5-64			

APPROVED W.B. Moe
CHECKED J.H. NIPP
DRAWN N.K. BECK
DESIGNED -

REFERENCE DRAWINGS

COMPONENTS (UNLESS OTHERWISE INDICATED)

	TOLERANCE	VALUE	SIZE
RESISTORS			
CAPACITORS			

TITLE
LOGIC DIAGRAM,
FUNCTION TRANSLATORS

CONTROL DATA CORPORATION
I D P DIVISION

PROJECT OR PRODUCT
8092 TELEPROGRAMMER

DRAWING NUMBER 3604270C REV F

SHT PAGE 5

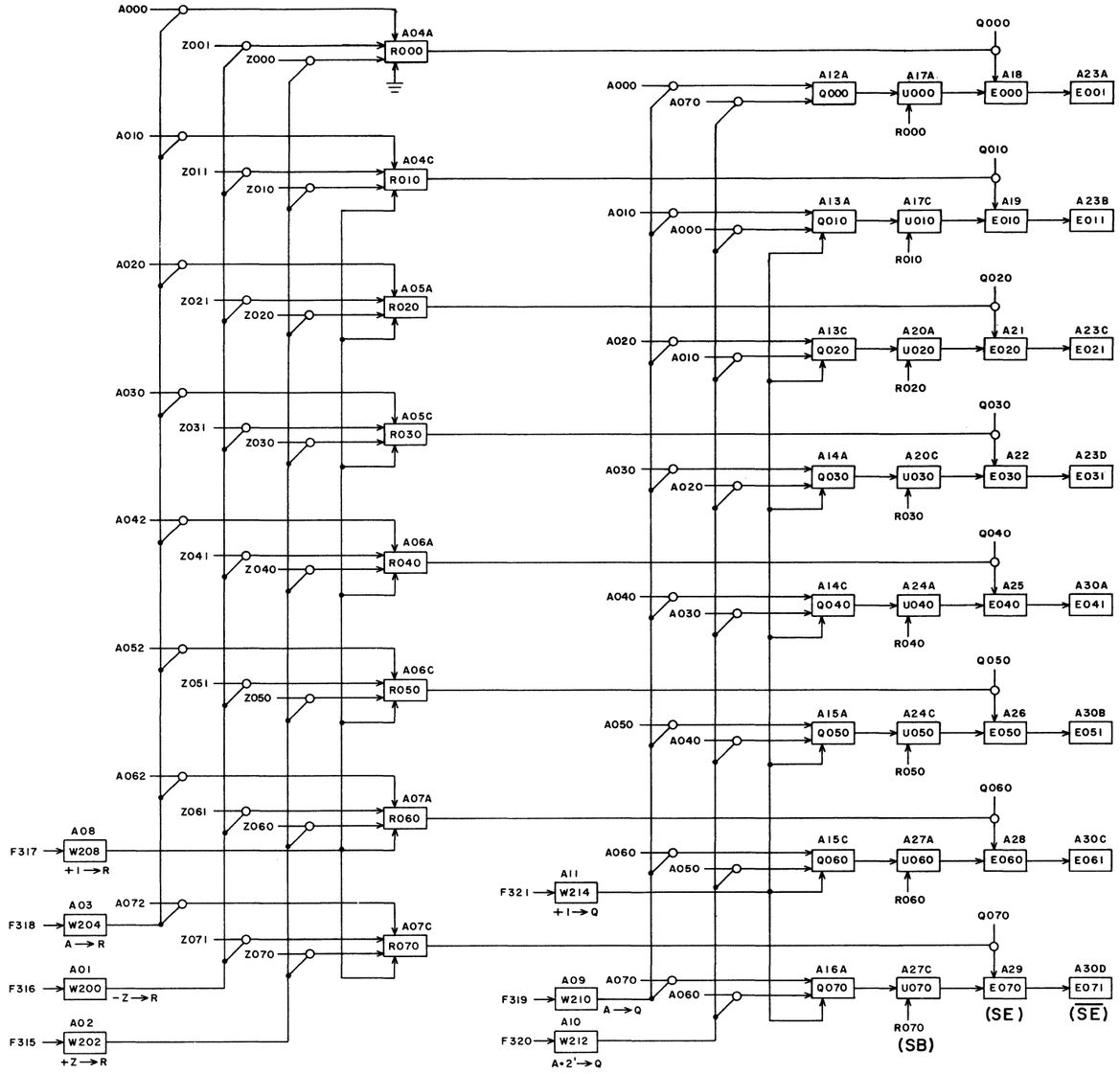

REV.	AUTH.	DATE	REQ.	DRW.	CHK.	APPROVED
REVISIONS						
-						
APPROVED	-	W.B. Hoe			2/24/64	
CHECKED	-	J.H. NIPP			2/24/64	
DRAWN	-	N.K. BECK			2/18/64	
REVIEWED	-					

REFERENCE DRAWINGS

COMPONENTS (UNLESS OTHERWISE INDICATED)	TOLERANCE	VALUE	SIZE
RESISTORS			
CAPACITORS			

TITLE

LOGIC DIAGRAM,
R AND Q INVERTERS

CONTROL DATA CORPORATION
I D P DIVISION

PROJECT OR PRODUCT
8092 TELEPROGRAMMER

DRAWING NUMBER 360428 REV

SHT PAGE 6

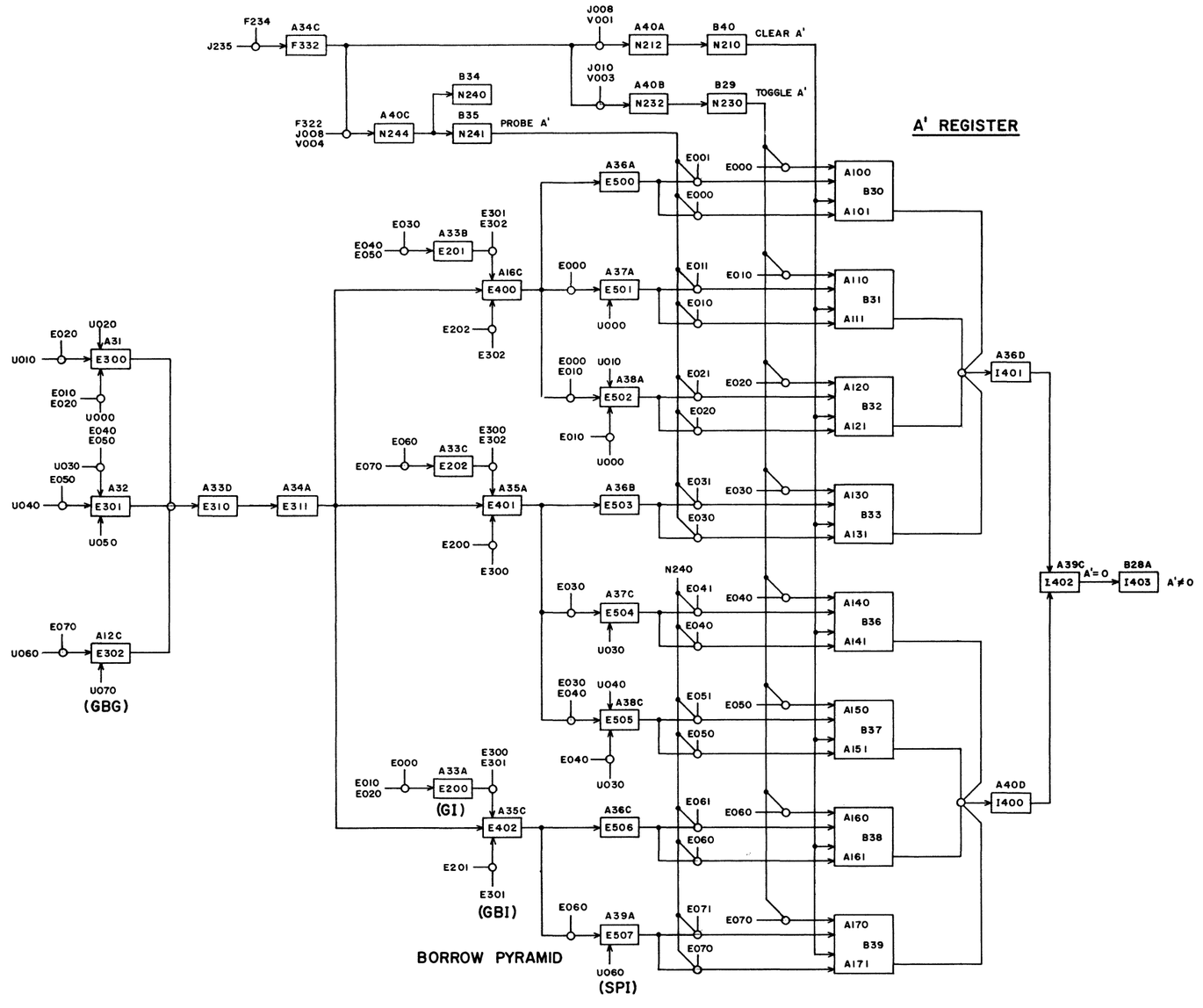

REV.	AUTH.	DATE	REQ.	DRW.	CHK.	APPROVED
REVISIONS						
-						
APPROVED	W.D. Hoge					2/28/64
CHECKED	J.H. NIPP					2/24/64
DRAWN	N.K. BECK					2/19/64
DESIGNED	-					

REFERENCE DRAWINGS

COMPONENTS (UNLESS OTHERWISE INDICATED)

	TOLERANCE	VALUE	SIZE
RESISTORS			
CAPACITORS			

TITLE

LOGIC DIAGRAM,
REGISTER - A'

CONTROL DATA CORPORATION
I D P DIVISION

PROJECT OR PRODUCT
8092 TELEPROGRAMMER

DRAWING NUMBER
364157

REV

SHT

PAGE 7

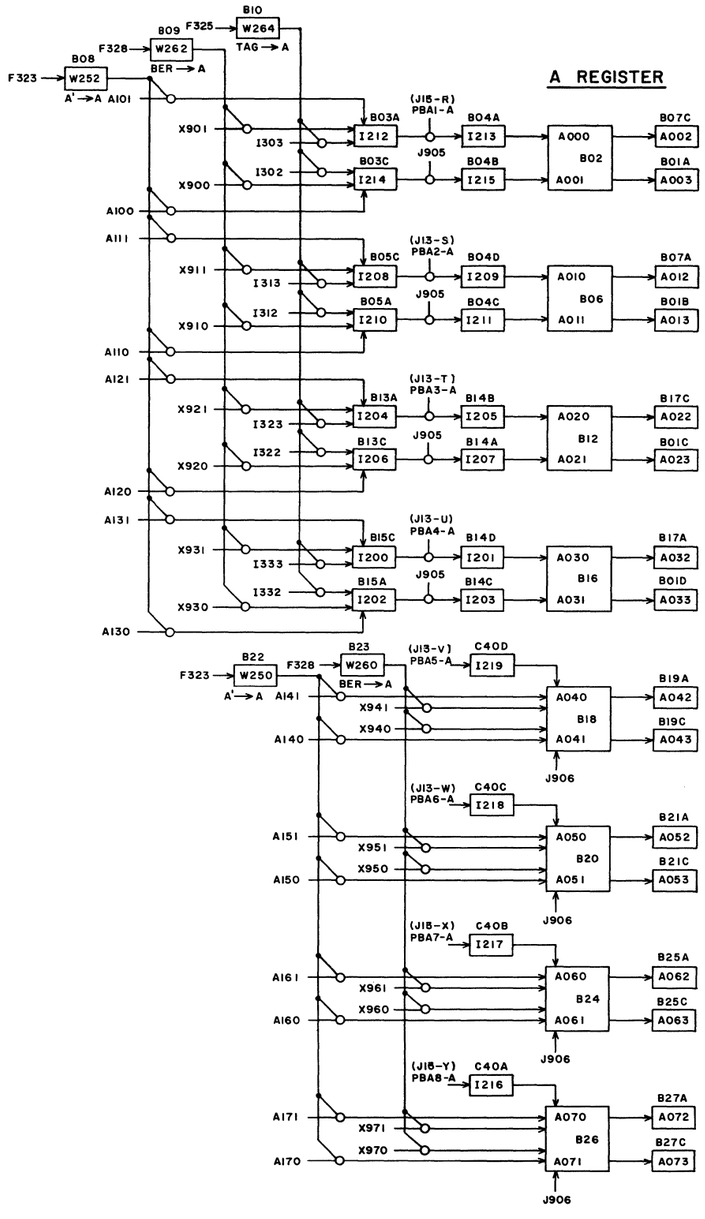

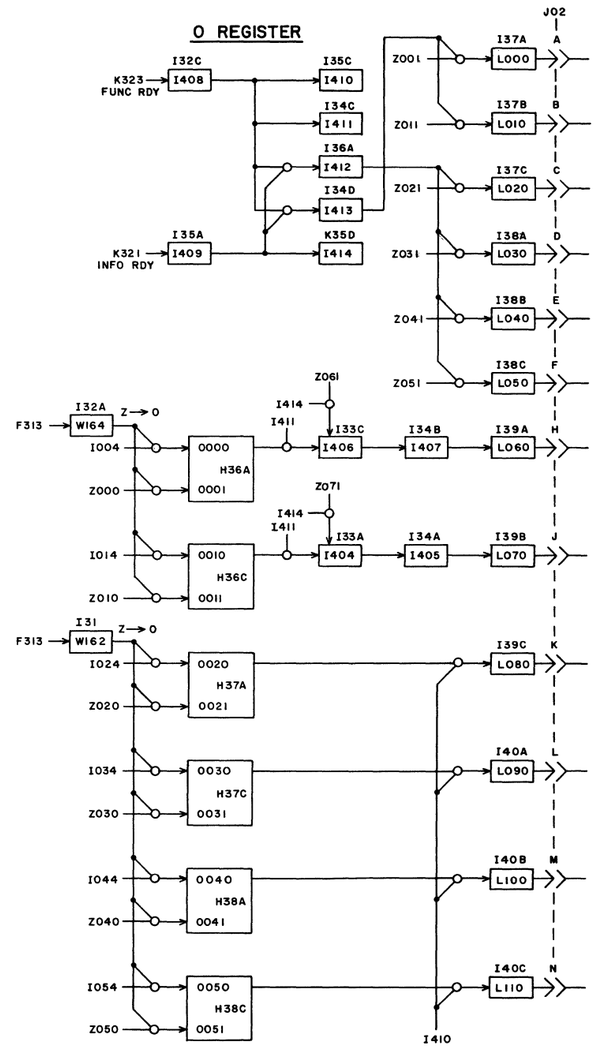

C	1204	3-27	K.S.			
B	1585	3-15	KH			
A	1954	10-28		REVISIONS		
ECR	MTR.	DATE	REQ.	PTR.	CHK.	APPROVED

APPROVED - W.B. Moe 2/24/64
CHECKED - J.H. NIPP 2/24/64
DRAWN - N.K. BECK 2/6/64
DESIGNED -

REFERENCE DRAWINGS

COMPONENTS (UNLESS OTHERWISE INDICATED)

	TOLERANCE	VALUE	SIZE
RESISTORS			
CAPACITORS			

TITLE
LOGIC DIAGRAM
REGISTERS - A AND O

CONTROL DATA CORPORATION
I D P DIVISION

PROJECT OR PRODUCT
8092 TELEPROGRAMMER

DRAWING NUMBER 360429 REV C

SHT PAGE 8

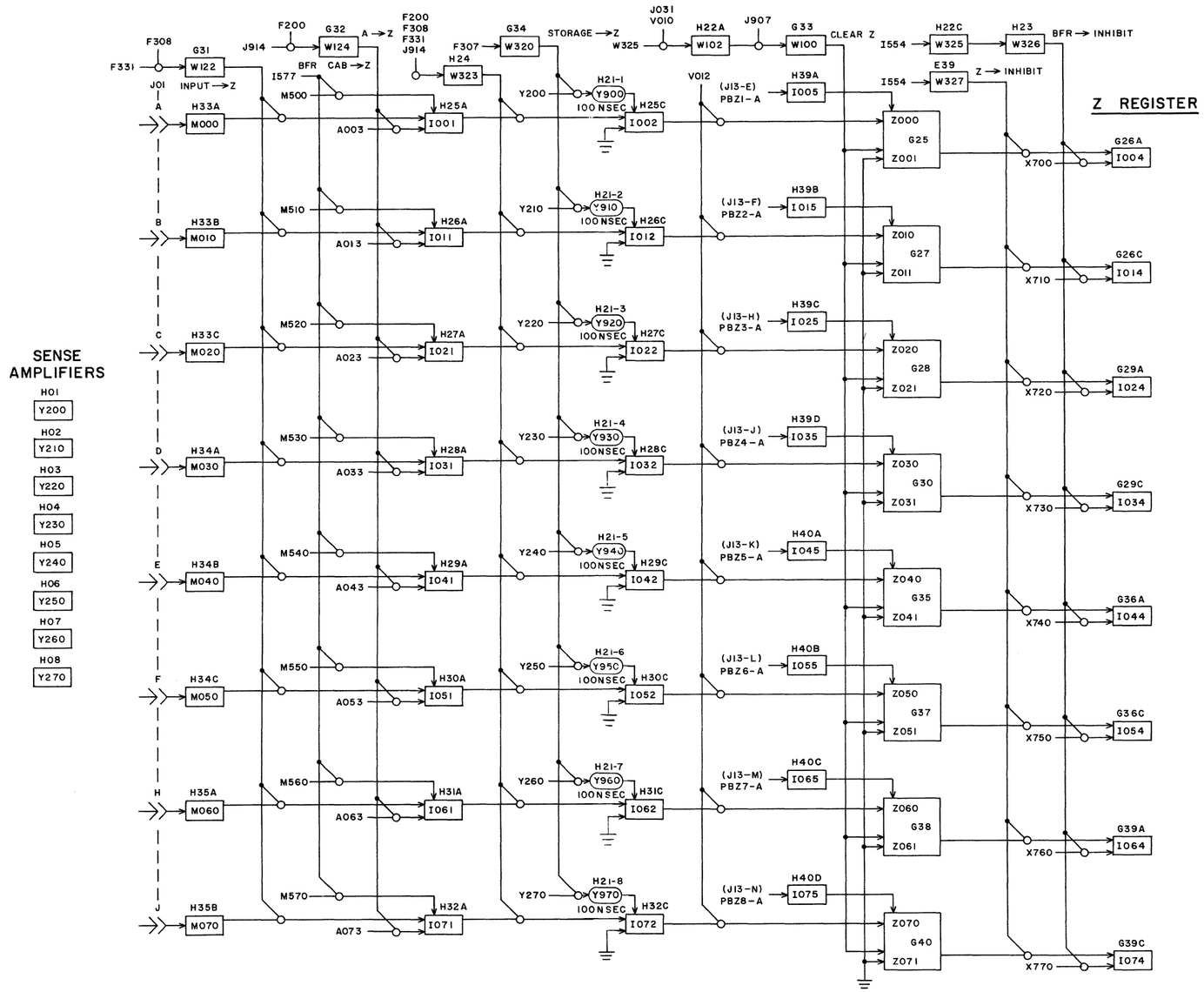

REV.	AUTH.	DATE	REQ.	DRW.	CHK.	APPROVED
B	1585	3-15-65		KH		
A	1402	9-23-64			SS	

REVISIONS

APPROVED : W.E. Nipp 2/24/64
CHECKED : J. H. NIPP 2/24/64
DRAWN : N. K. BECK 2/7/64
DESIGNED :

REFERENCE DRAWINGS

COMPONENTS (UNLESS OTHERWISE INDICATED)

	TOLERANCE	VALUE	SIZE
RESISTORS			
CAPACITORS			

TITLE
LOGIC DIAGRAM
REGISTER-Z

CONTROL DATA CORPORATION
I D P DIVISION

PROJECT OR PRODUCT
8092 TELEPROGRAMMER

DRAWING NUMBER 364158
REV B

SHT
PAGE 9

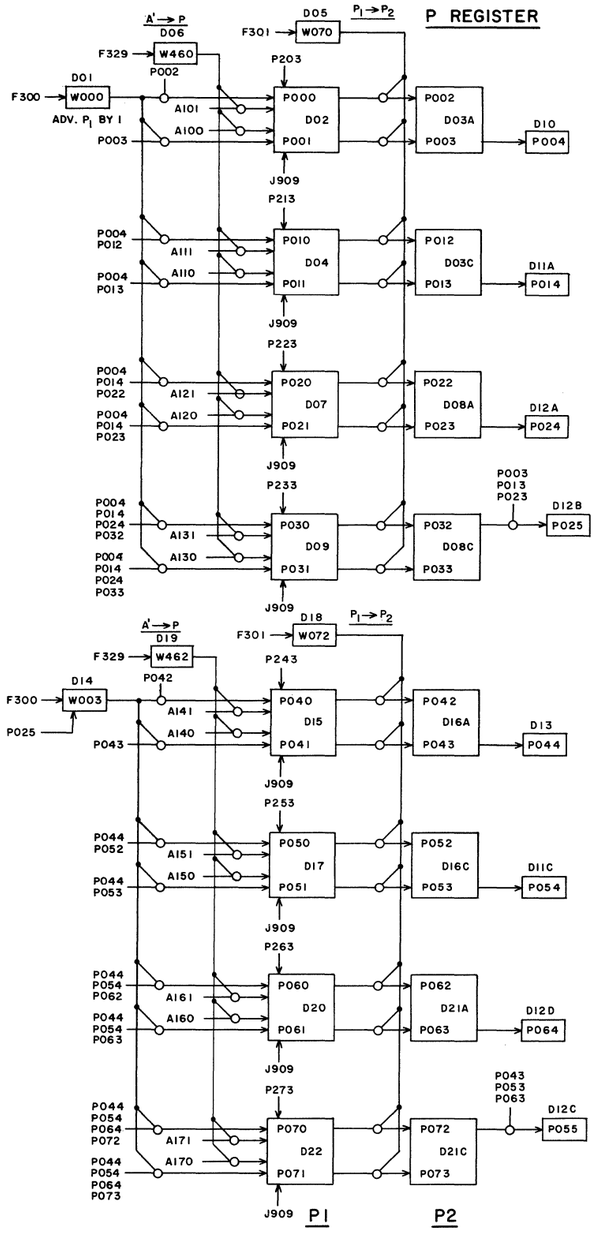

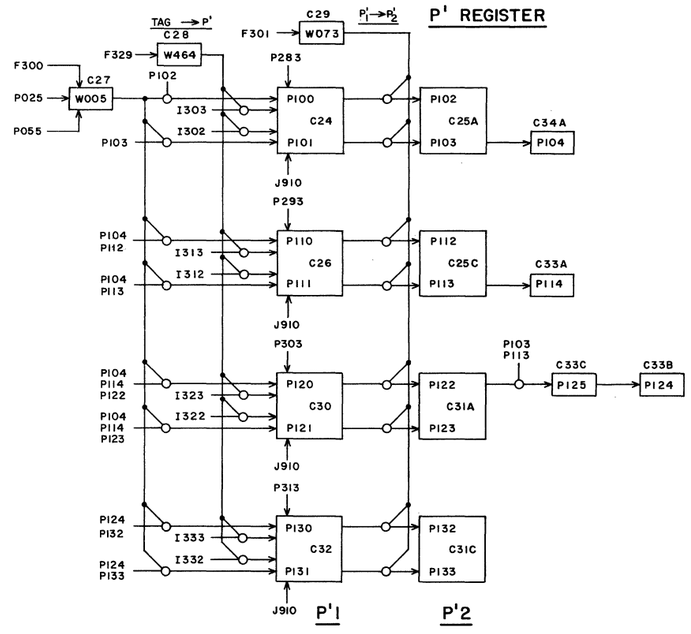

A	3-15	KH	Wolcott		
REV.	DATE	REG.	CHK.	APPROVED	
REVISIONS					

APPROVED : W.B. McC 2/25/64
CHECKED : J.H. NIPP 2/24/64
DRAWN : N.K. BECK 2/4/64
DESIGNED :

REFERENCE DRAWINGS

COMPONENTS (UNLESS OTHERWISE INDICATED)

	TOLERANCE	VALUE	SIZE
RESISTORS			
CAPACITORS			

TITLE
LOGIC DIAGRAM
REGISTERS – P AND P'

CONTROL DATA CORPORATION
I D P DIVISION

PROJECT OR PRODUCT
8092 TELEPROGRAMMER

DRAWING NUMBER 360430 REV A

SHT PAGE 10

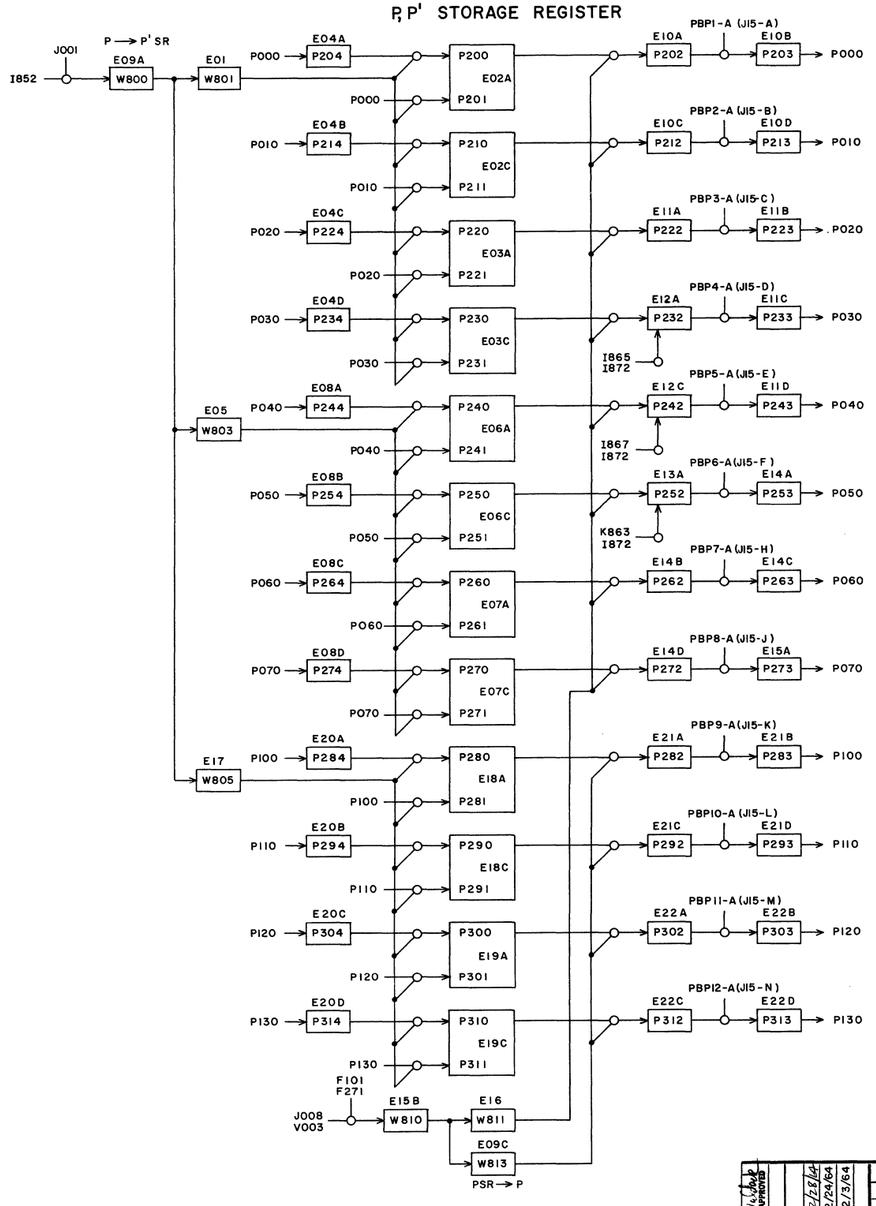

REV.	AUTH.	DATE	REQ.	DRW.	CHK.	APPROVED
A	1585	3-15-65		KH		

REVISIONS

APPROVED : W. B. Moe 2/28/64
CHECKED : J. H. NIPP 2/24/64
DRAWN : N. K. BECK 2/3/64
DESIGNED :

REFERENCE DRAWINGS

COMPONENTS (UNLESS OTHERWISE INDICATED)

	TOLERANCE	VALUE	SIZE
RESISTORS			
CAPACITORS			

TITLE
LOGIC DIAGRAM
REGISTER – PSR

CONTROL DATA CORPORATION
I D P DIVISION

PROJECT OR PRODUCT
8092 TELEPROGRAMMER

DRAWING NUMBER 364159
REV A
SHT
PAGE 11

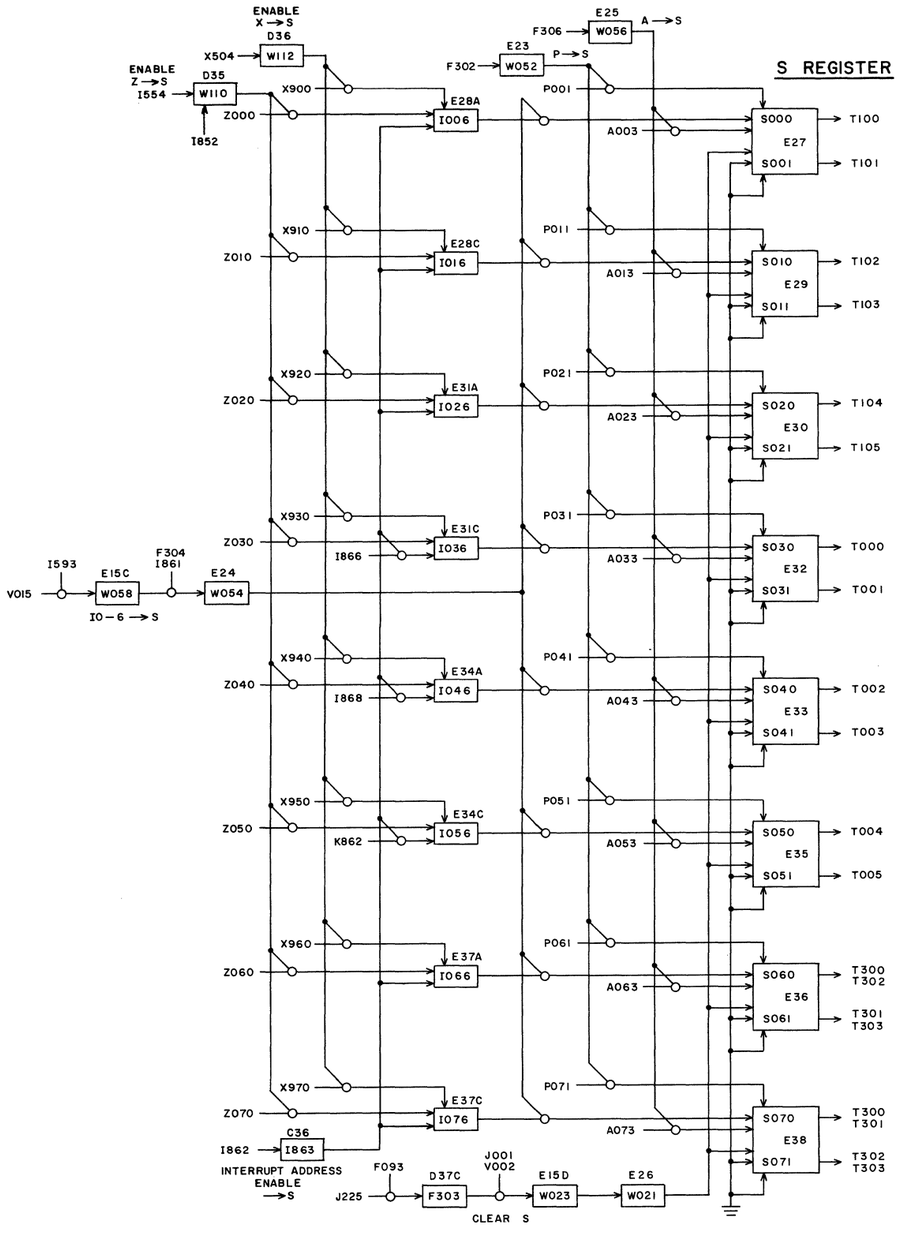

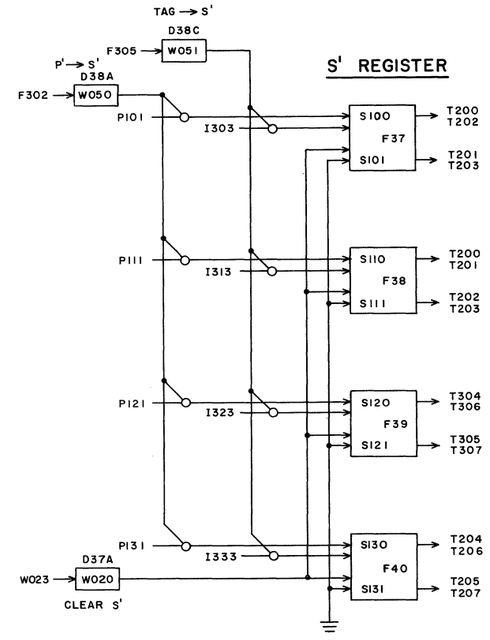

REV.	AUTH.	DATE	REQ.	DRW.	CHK.	APPROVED
A	1585	3-13-65			KH	

REVISIONS

APPROVED : W.B. Moore 2/28/64
CHECKED : J.H. NIPP 2/24/64
DRAWN : N.K. BECK 2/5/64
DESIGNED :

REFERENCE DRAWINGS

COMPONENTS (UNLESS OTHERWISE INDICATED)

	TOLERANCE	VALUE	SIZE
RESISTORS			
CAPACITORS			

TITLE LOGIC DIAGRAM REGISTERS – S AND S'

CONTROL DATA CORPORATION
I D P DIVISION

PROJECT OR PRODUCT 8092 TELEPROGRAMMER

DRAWING NUMBER 364160 REV A

SHT PAGE 12

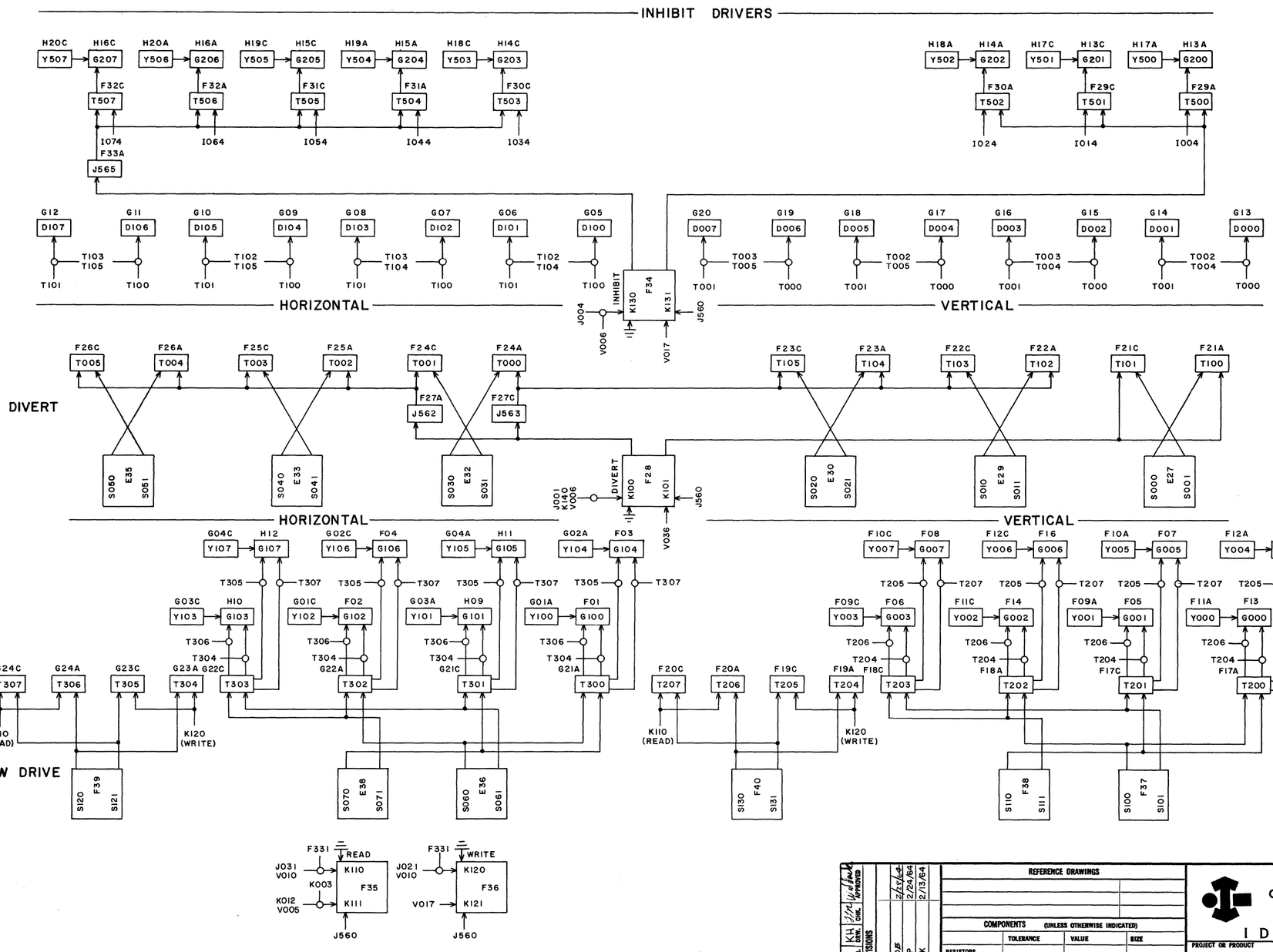

REV.	AUTH.	DATE	REQ.	DRW.	CHK.	APPROVED
A	1585	3-15-65		KH		

REVISIONS

APPROVED : W.B. MOE 2/24/64
CHECKED : J.H. NIPP 2/24/64
DRAWN : N.K. BECK 2/13/64
DESIGNED :

REFERENCE DRAWINGS

COMPONENTS (UNLESS OTHERWISE INDICATED)

	TOLERANCE	VALUE	SIZE
RESISTORS			
CAPACITORS			

TITLE
LOGIC DIAGRAM
STORAGE TRANSLATORS

CONTROL DATA CORPORATION
I D P DIVISION

PROJECT OR PRODUCT
8092 TELEPROGRAMMER

DRAWING NUMBER 360431
REV A

SHT
PAGE 13

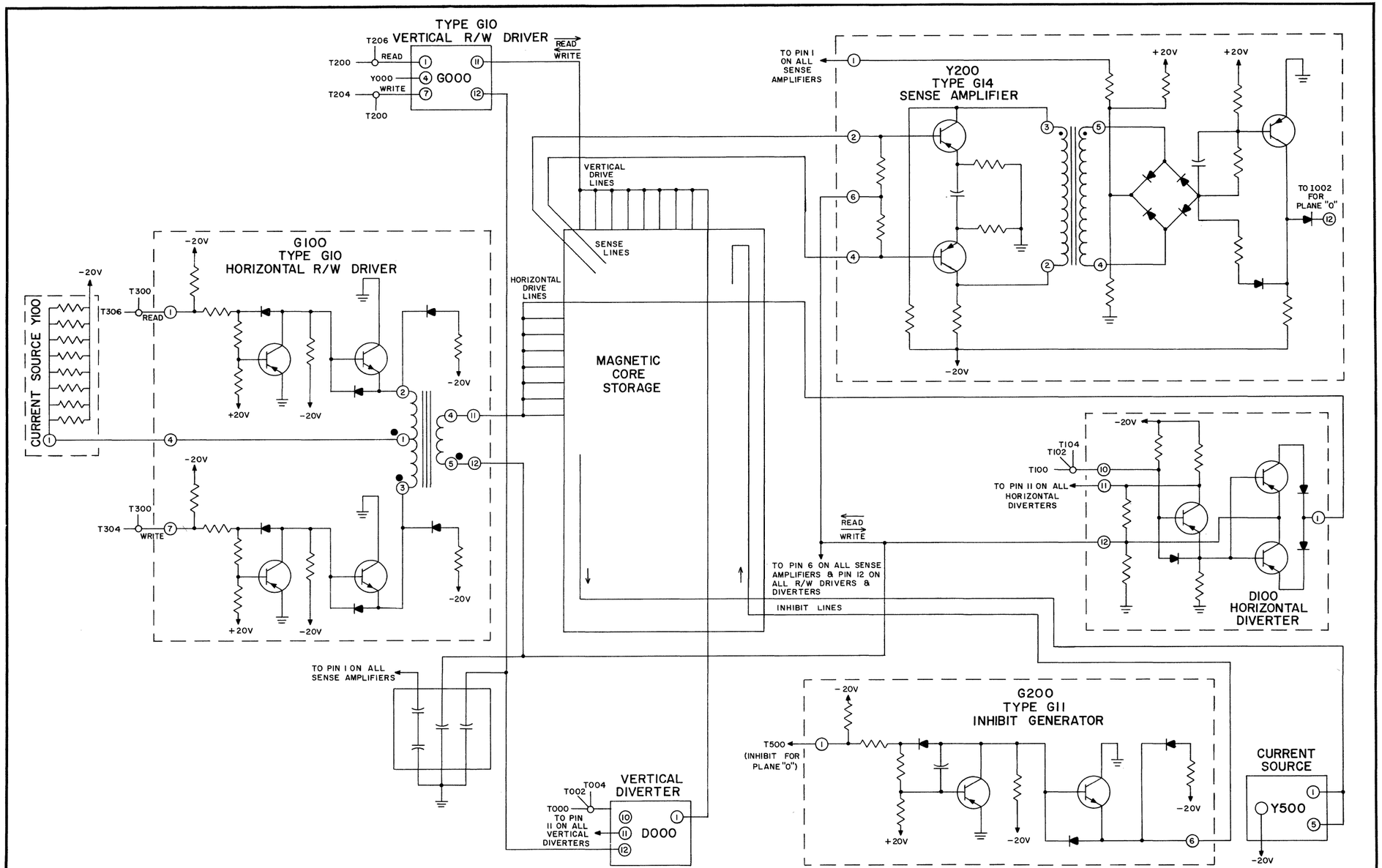

REV.	AUTH.	DATE	REQ.	DRW.	CHK.	APPROVED
A	1585	3-15-65	KH			

REVISIONS

APPROVED : W.B. Moe 2/24/64
CHECKED : J.H. NIPP 2/24/64
DRAWN : N.K. BECK 1/27/64
DESIGNED :

REFERENCE DRAWINGS

COMPONENTS (UNLESS OTHERWISE INDICATED)

	TOLERANCE	VALUE	SIZE
RESISTORS			
CAPACITORS			

TITLE
SCHEMATIC DIAGRAM, TYPICAL STORAGE CIRCUITS

CONTROL DATA CORPORATION
I D P DIVISION

PROJECT OR PRODUCT
8092 TELEPROGRAMMER

DRAWING NUMBER 360442
REV A

SHT
PAGE 14

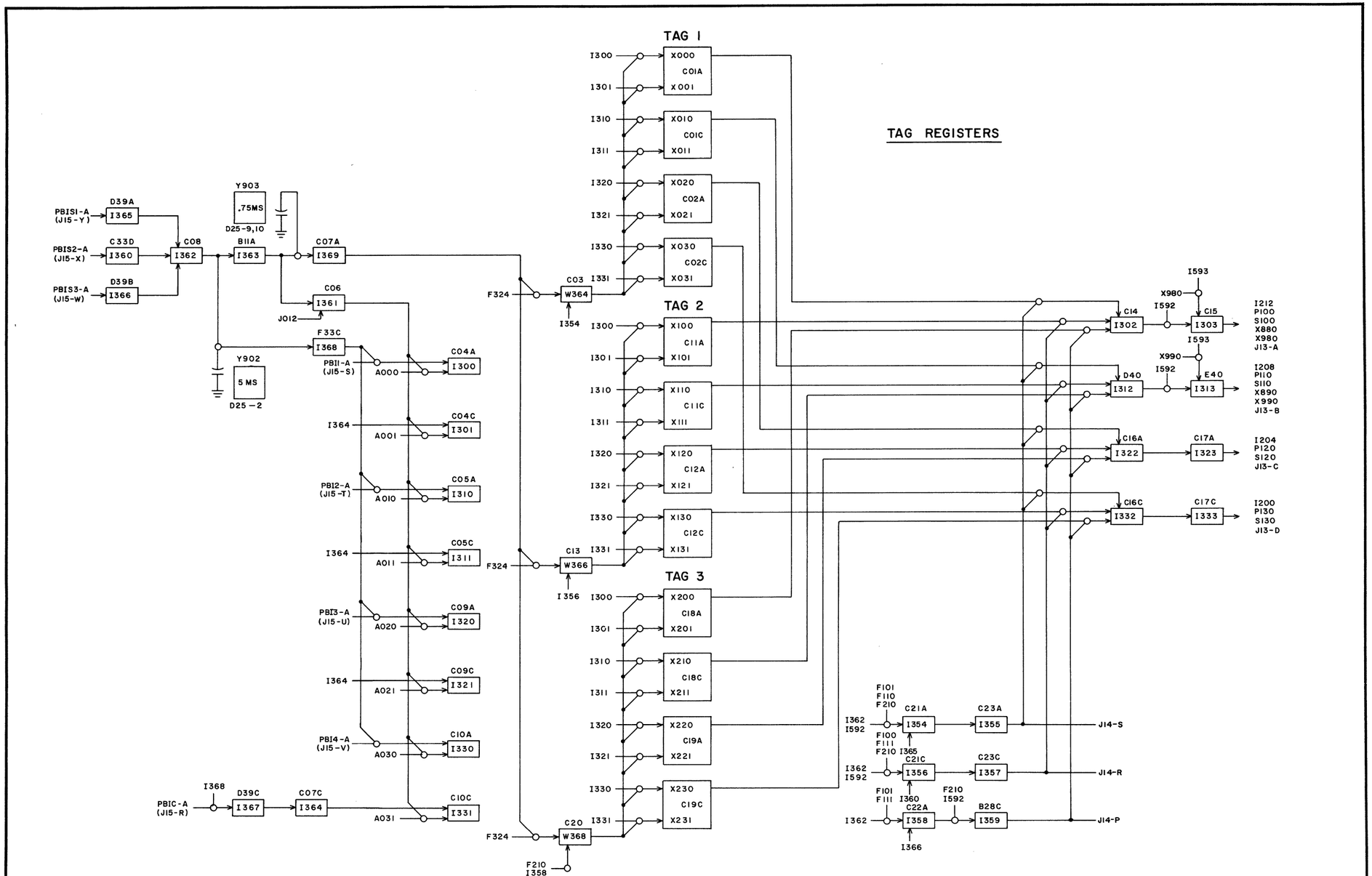

REFERENCE DRAWINGS			
COMPONENTS (UNLESS OTHERWISE INDICATED)			
	TOLERANCE	VALUE	SIZE
RESISTORS			
CAPACITORS			

TITLE: LOGIC DIAGRAM, REGISTER-TAG 1,2,& 3

CONTROL DATA CORPORATION
I D P DIVISION

PROJECT OR PRODUCT: 8092 TELEPROGRAMMER

DRAWING NUMBER: 360433 — REV: A

SHT — PAGE: 15

REVISIONS: A 1585 REV. 3-15 AUTH. 6 DATE — KH REQ. DRW. — CHK. APPROVED

APPROVED: W.B. Nice 2/28/64
CHECKED: J.H. NIPP 2/24/64
DRAWN: N.K. BECK 2/10/64
DESIGNED:

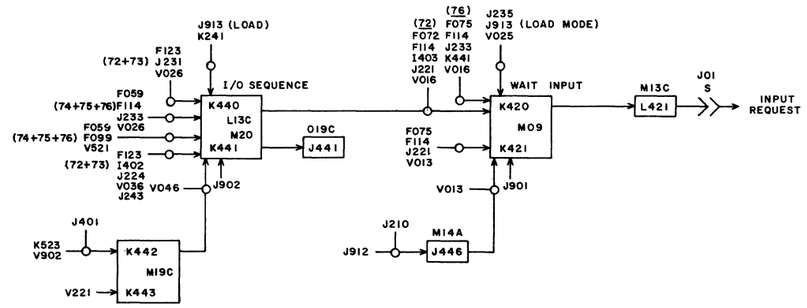

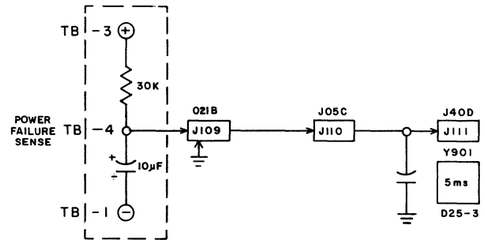

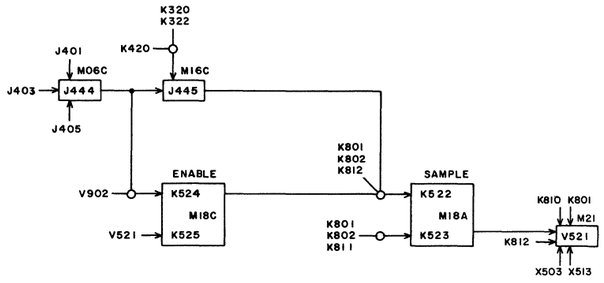

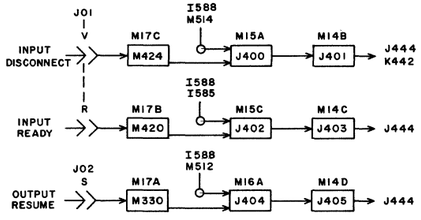

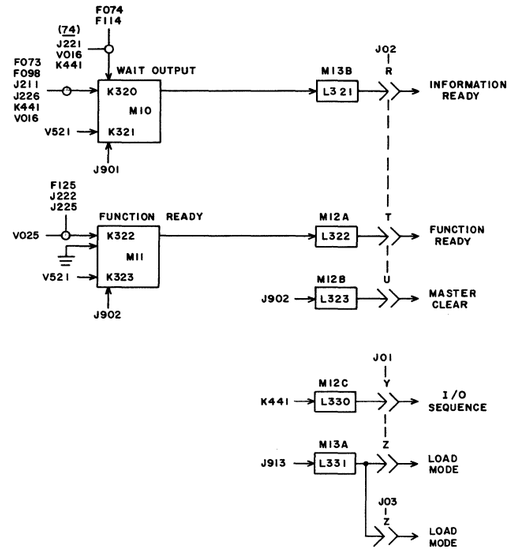

REV.	AUTH.	DATE	REVISIONS	DSN. CHK.	APPROVED
D	2041	3/64	Rev. per ECO		
C	1585	2/64	Rev. per ECO		
B	1411	12/63	Rev. per ECO		
A	1354	10/63	Rev. per ECO		

APPROVED	W. B. Moe	2/21/64
CHECKED	J. H. NIPP	2/20/64
DRAWN	K. K. BECK	2/21/64
DESIGNED	-	

REFERENCE DRAWINGS

COMPONENTS (UNLESS OTHERWISE INDICATED)

	TOLERANCE	VALUE	SIZE
RESISTORS			
CAPACITORS			

TITLE

LOGIC DIAGRAM, INPUT/OUTPUT CONTROL

CONTROL DATA CORPORATION
I D P DIVISION

PROJECT OR PRODUCT
8092 TELEPROGRAMMER

DRAWING NUMBER
360425

REV
F

SHT
2 OF 2

PAGE
16

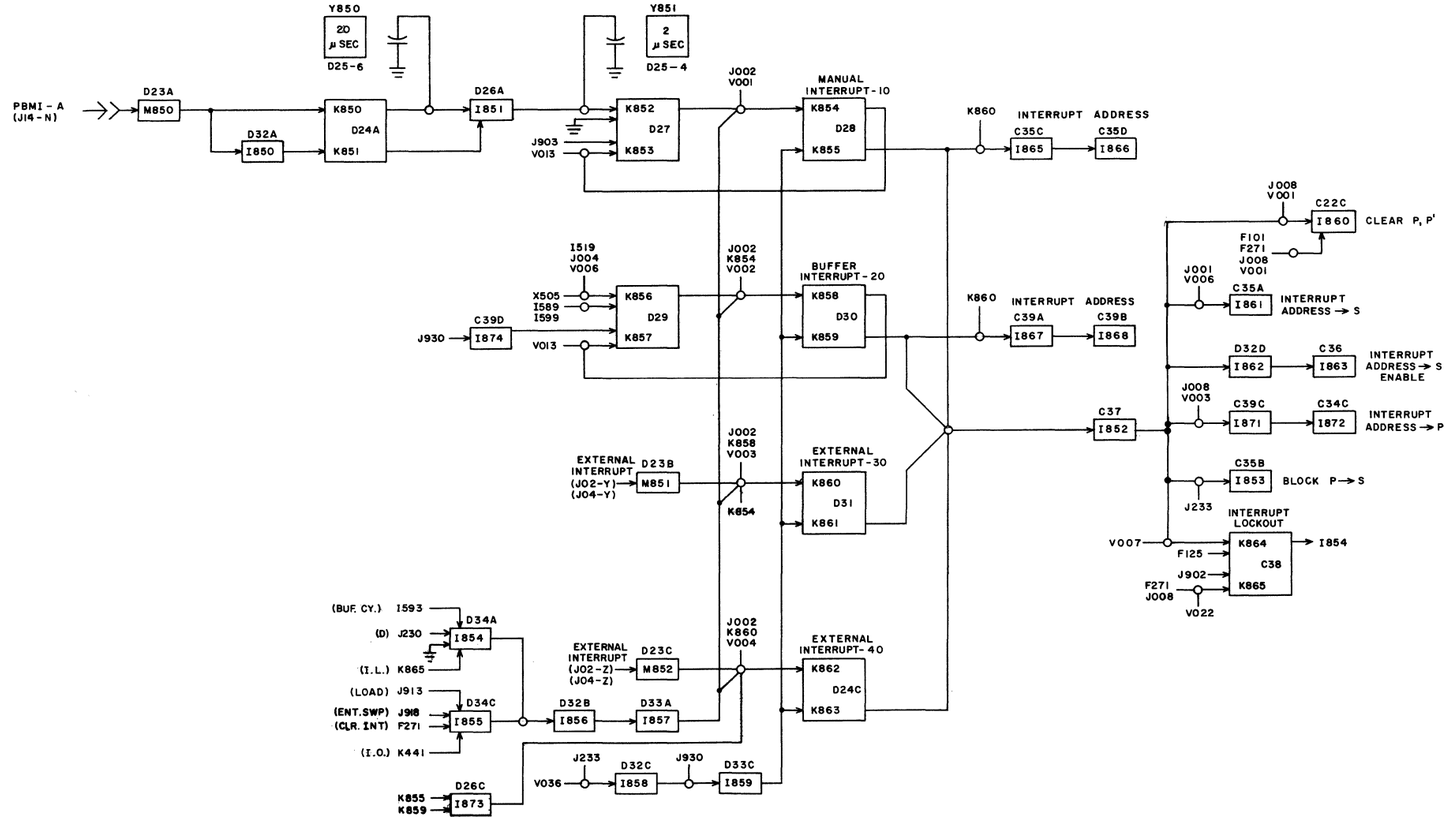

REV.	AUTH.	DATE	REQ.	DRW.	CHK.	APPROVED
E	2388	3-1-67	JB			
D	2085	3-22-64	WW			
C	1585	3-15-64	KH			
B	1354	7-29-64				
A	1384	7-30-64				

REVISIONS

APPROVED: W.B. Moe 2/25/64
CHECKED: J. H. NIPP 2/24/64
DRAWN: N. K. BECK 1/31/64
DESIGNED:

REFERENCE DRAWINGS

COMPONENTS (UNLESS OTHERWISE INDICATED)

	TOLERANCE	VALUE	SIZE
RESISTORS			
CAPACITORS			

TITLE: LOGIC DIAGRAM INTERRUPT

CONTROL DATA CORPORATION
I D P DIVISION

PROJECT OR PRODUCT: 8092 TELEPROGRAMMER

DRAWING NUMBER: 360434 REV: E

SHT: PAGE: 17

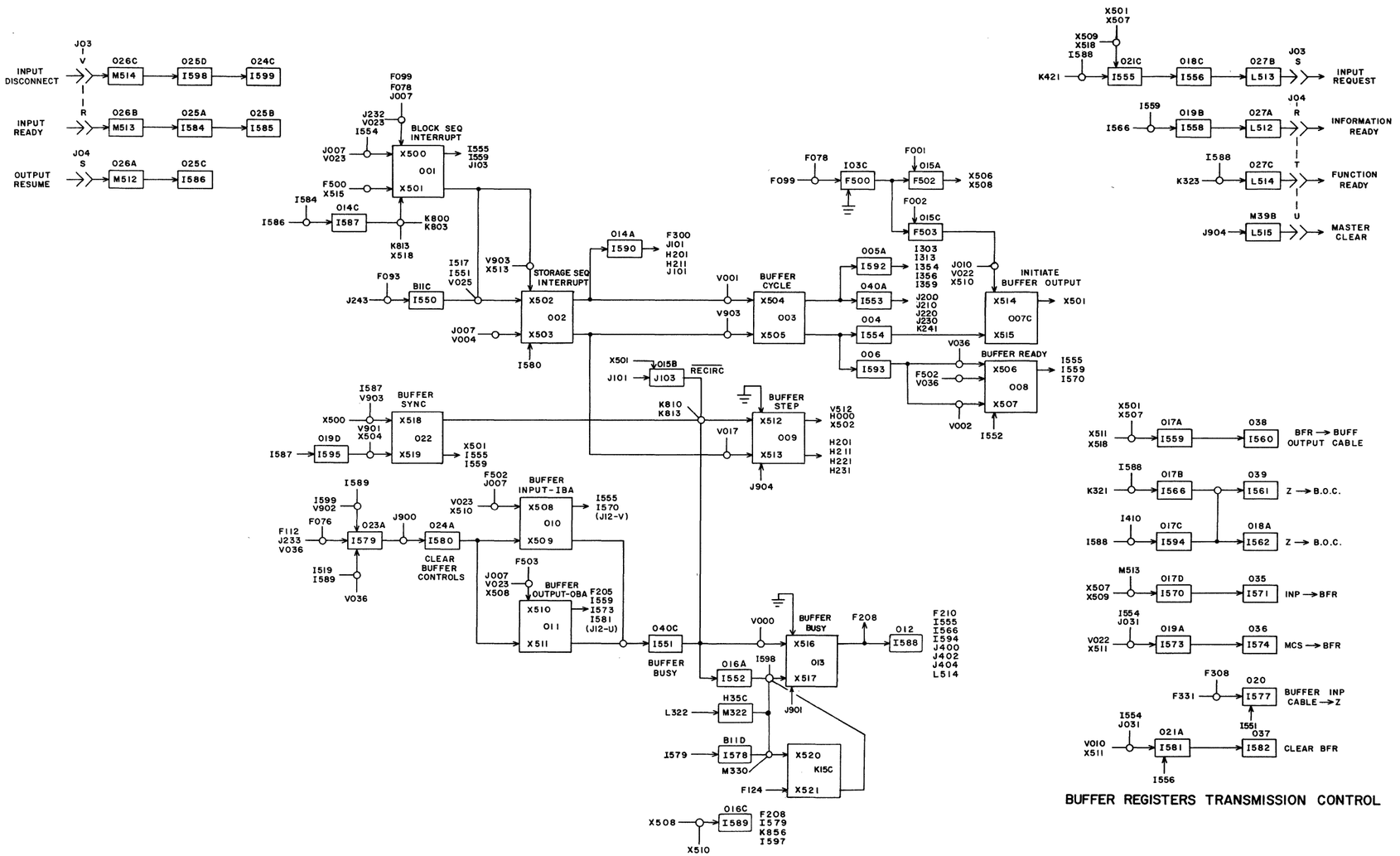

BUFFER REGISTERS TRANSMISSION CONTROL

| | | |

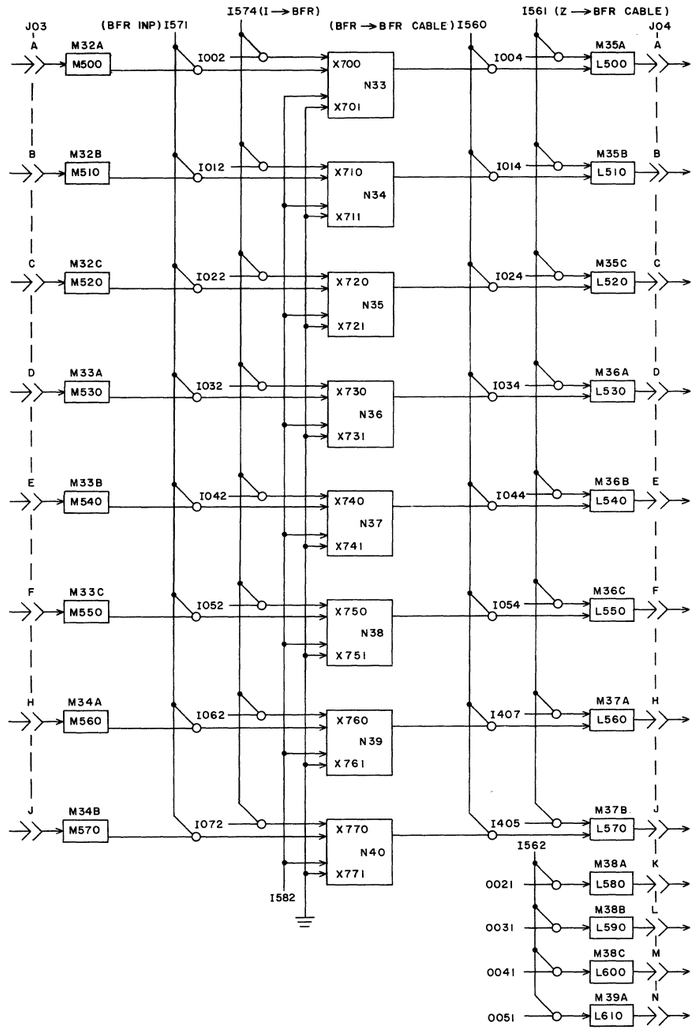

BUFFER DATA REGISTER (BFR)

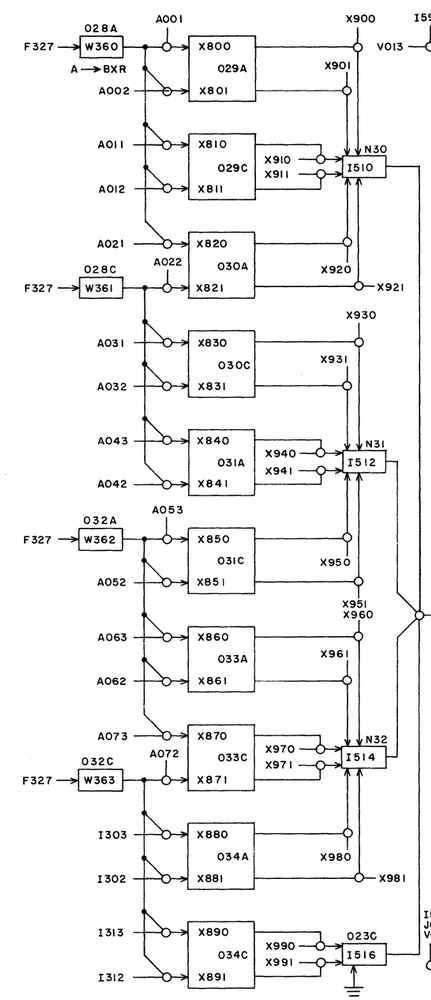

BUFFER EXIT REGISTER (BXR)

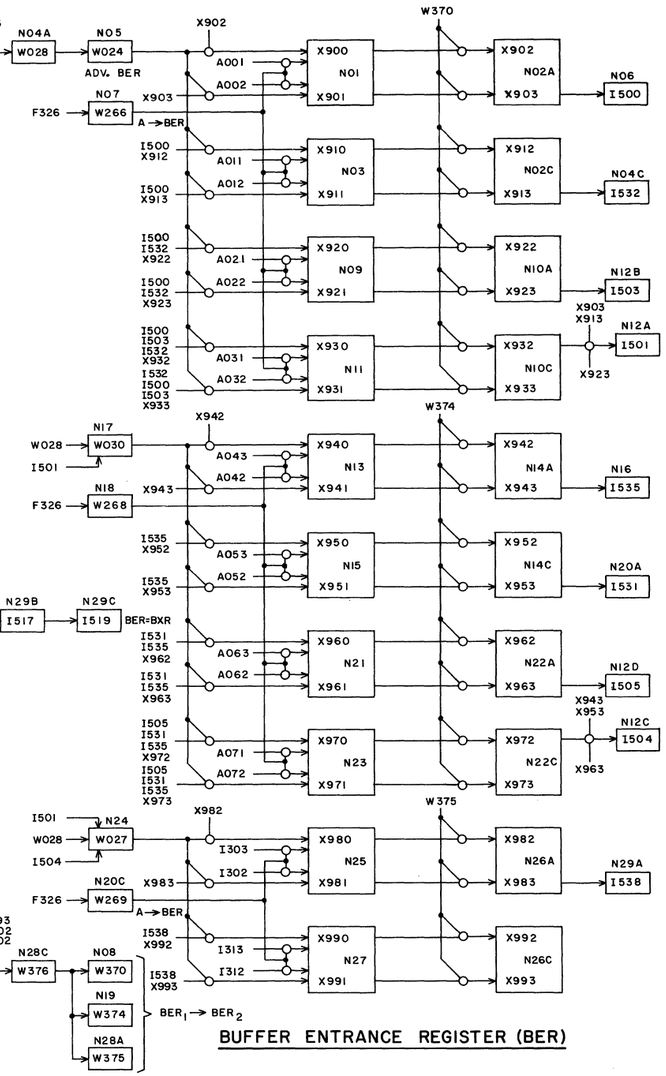

BUFFER ENTRANCE REGISTER (BER)

REV.	AUTH.	DATE	REQ.	DRW.	CHK.	APPROVED
A	1585	3-15 65	KH			

REVISIONS

APPROVED: W.B. Moe 2/26/64
CHECKED: J.H. NIPP 2/24/64
DRAWN: N.K. BECK 1/30/64
DESIGNED:

REFERENCE DRAWINGS

COMPONENTS (UNLESS OTHERWISE INDICATED)

	TOLERANCE	VALUE	SIZE
RESISTORS			
CAPACITORS			

TITLE: LOGIC DIAGRAM
REGISTERS - BFR, BXR, BER

CONTROL DATA CORPORATION
I D P DIVISION

PROJECT OR PRODUCT: 8092 TELEPROGRAMMER

DRAWING NUMBER: 360432 REV: A

SHT PAGE 19

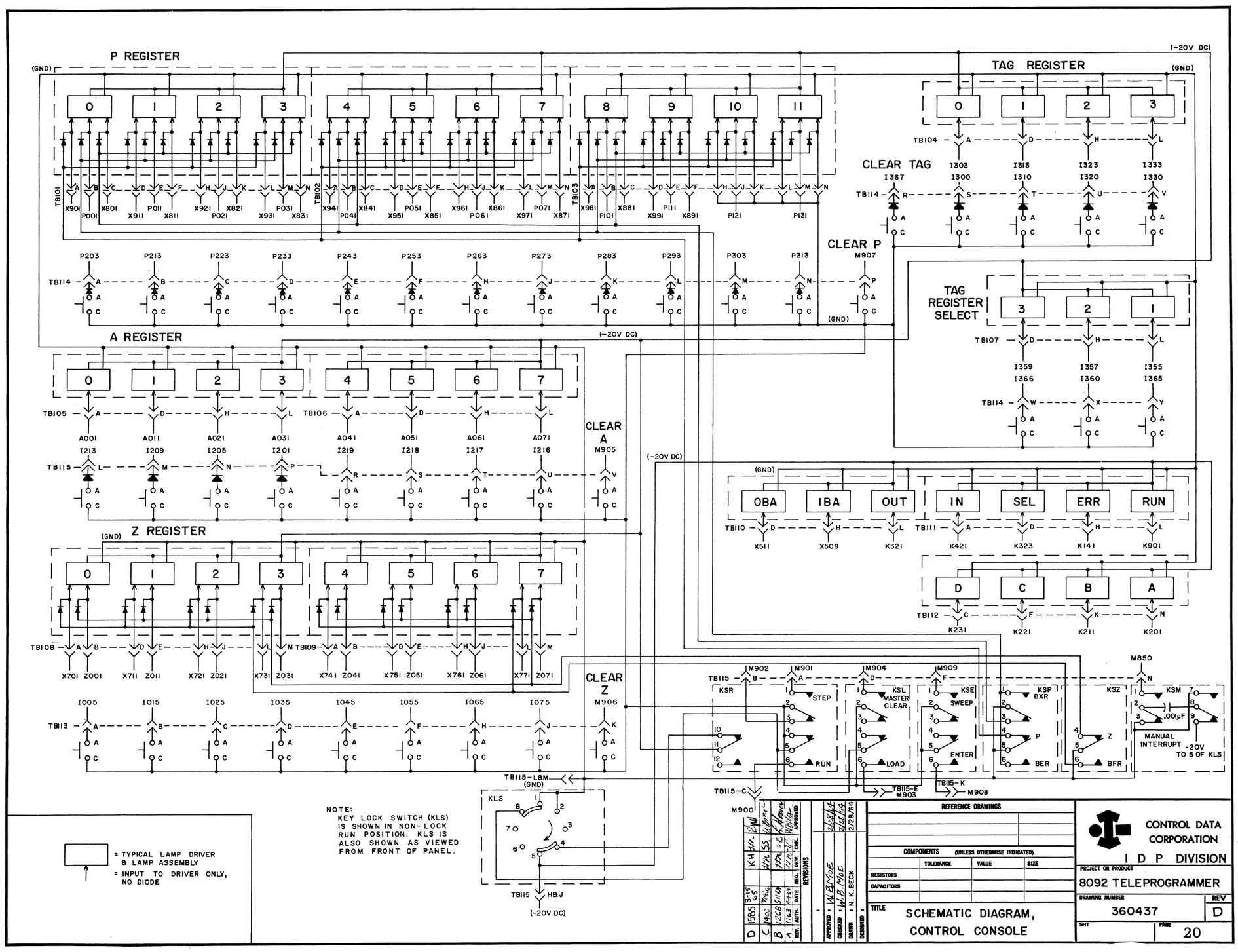
P REGISTER
(GND)
0
1
2
3
4
5
6
7
8
9
10
11
TB101
TB102
TB103
X901 P001 X801 P011 X911 X811 X921 P021 X821 X931 P031 X831
X941 P041 X841 X951 P051 X851 X961 P061 X861 X971 P071 X871
X981 P101 X881 X991 P111 X891 P121 P131
TB114
P203 P213 P223 P233 P243 P253 P263 P273 P283 P293 P303 P313
CLEAR P
M907
(GND)
(-20V DC)
TAG REGISTER
(GND)
TB104
CLEAR TAG
I303 I313 I323 I333
I367 I300 I310 I320 I330
TB114
TAG REGISTER SELECT
TB107
I359 I357 I355
I366 I360 I365
TB114
A REGISTER
TB105
TB106
A001 A011 A021 A031 A041 A051 A061 A071
I213 I209 I205 I201 I219 I218 I217 I216
TB113
CLEAR A
M905
(-20V DC)
(GND)
OBA
IBA
OUT
IN
SEL
ERR
RUN
TB110
TB111
X511 X509 K321 K421 K323 K141 K901
D
C
B
A
TB112
K231 K221 K211 K201
Z REGISTER
(GND)
TB108
TB109
X701 Z001 X711 Z011 X721 Z021 X731 Z031 X741 Z041 X751 Z051 X761 Z061 X771 Z071
I005 I015 I025 I035 I045 I055 I065 I075
TB113
CLEAR Z
M906
TB115-L&M
(GND)
KLS
TB115 H&J
(-20V DC)
M902
M901
M904
M909
M850
TB115
KSR
STEP
KSL
MASTER CLEAR
KSE
SWEEP
KSP
BXR
KSZ
KSM
.001µF
MANUAL INTERRUPT -20V TO 5 OF KLS
RUN
LOAD
ENTER
P
BER
Z
BFR
TB115-C
M900
TB115-E
M903
TB115-K
M908
= TYPICAL LAMP DRIVER & LAMP ASSEMBLY
= INPUT TO DRIVER ONLY, NO DIODE
NOTE:
KEY LOCK SWITCH (KLS) IS SHOWN IN NON-LOCK RUN POSITION. KLS IS ALSO SHOWN AS VIEWED FROM FRONT OF PANEL.
REVISIONS
D 1585 13-15 65 K.H.Sun
C 1492 Wade SS
B 1226 5114 JDS
A 1123 4-4-64 JDS
REV. AUTH. DATE DWN. CHKD. APPROVED
APPROVED W.B.Moe 2/28/64
CHECKED W.B.Moe 2/28/64
DRAWN N. K. BECK
DESIGNED
REFERENCE DRAWINGS
COMPONENTS (UNLESS OTHERWISE INDICATED)
TOLERANCE VALUE SIZE
RESISTORS
CAPACITORS
TITLE
SCHEMATIC DIAGRAM, CONTROL CONSOLE
CONTROL DATA CORPORATION
I D P DIVISION
PROJECT OR PRODUCT
8092 TELEPROGRAMMER
DRAWING NUMBER
360437
REV
D
SHT
PAGE
20

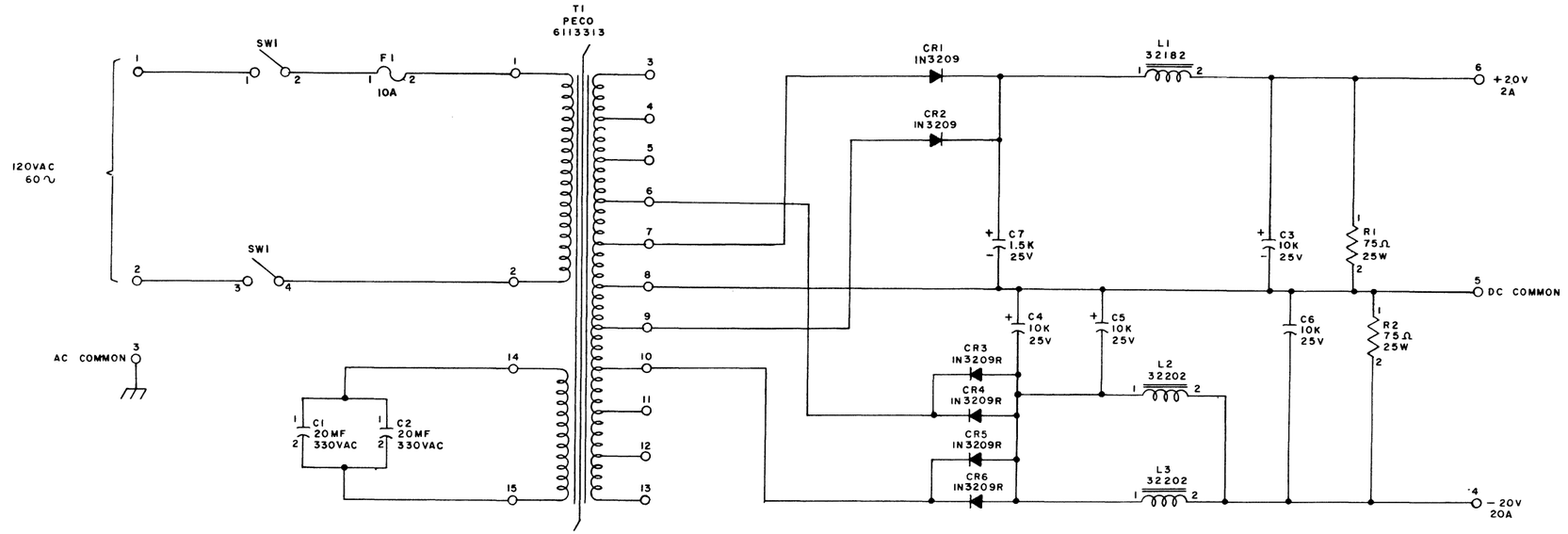

REV.	AUTH.	DATE	REVISIONS	DRW.	CHK.	APPROVED

APPROVED
CHECKED
DRAWN 12/30/63
DESIGNED

REFERENCE DRAWINGS

COMPONENTS (UNLESS OTHERWISE INDICATED)

	TOLERANCE	VALUE	SIZE
RESISTORS			
CAPACITORS			

TITLE
SCHEMATIC, POWER SUPPLY—
MODEL 8606-A

CONTROL DATA CORPORATION
I D P DIVISION

PROJECT OR PRODUCT

DRAWING NUMBER 364071

REV

PAGE 21

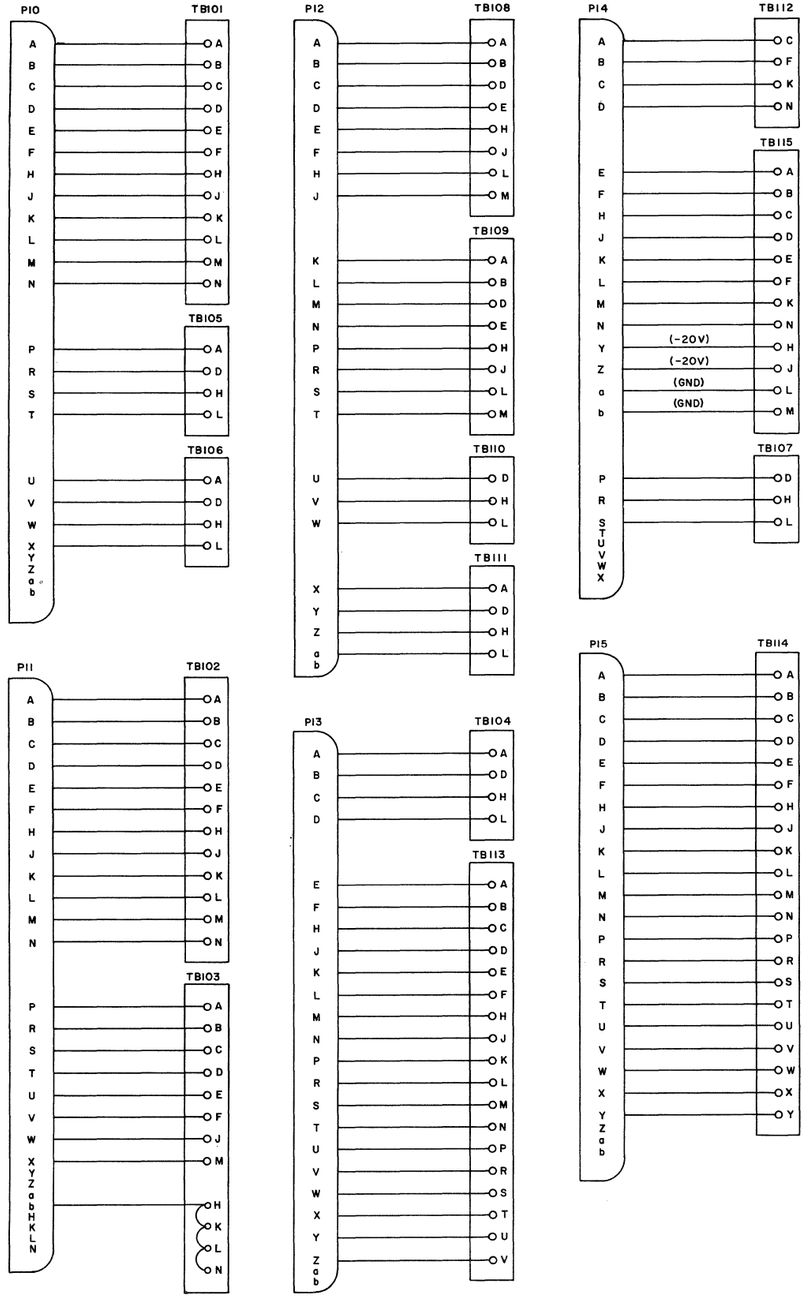

REV.	AUTH.	DATE	REVISIONS	DRWN.	APPROVED
A	1585	3-15-65	-	KH	

APPROVED		
CHECKED		3/4/64
DRAWN	N. K. BECK	
DESIGNED	-	

REFERENCE DRAWINGS

COMPONENTS (UNLESS OTHERWISE INDICATED)

	TOLERANCE	VALUE	SIZE
RESISTORS			
CAPACITORS			

TITLE

CABLING & AC-DC DIST

CONTROL DATA CORPORATION

I D P DIVISION

PROJECT OR PRODUCT

8092 TELEPROGRAMMER

DRAWING NUMBER 360441 REV A

SHT PAGE 22

REVISIONS							
REV.	ECO.	ZONE	DESCRIPTION	DRFT.	DATE	CHK'D	APP'D
A	—	—	RELEASED	—	11-30-68	—	[illegible]
B	80234		REVISED PER ECO	RAH	4-5-69	[illegible]	FES

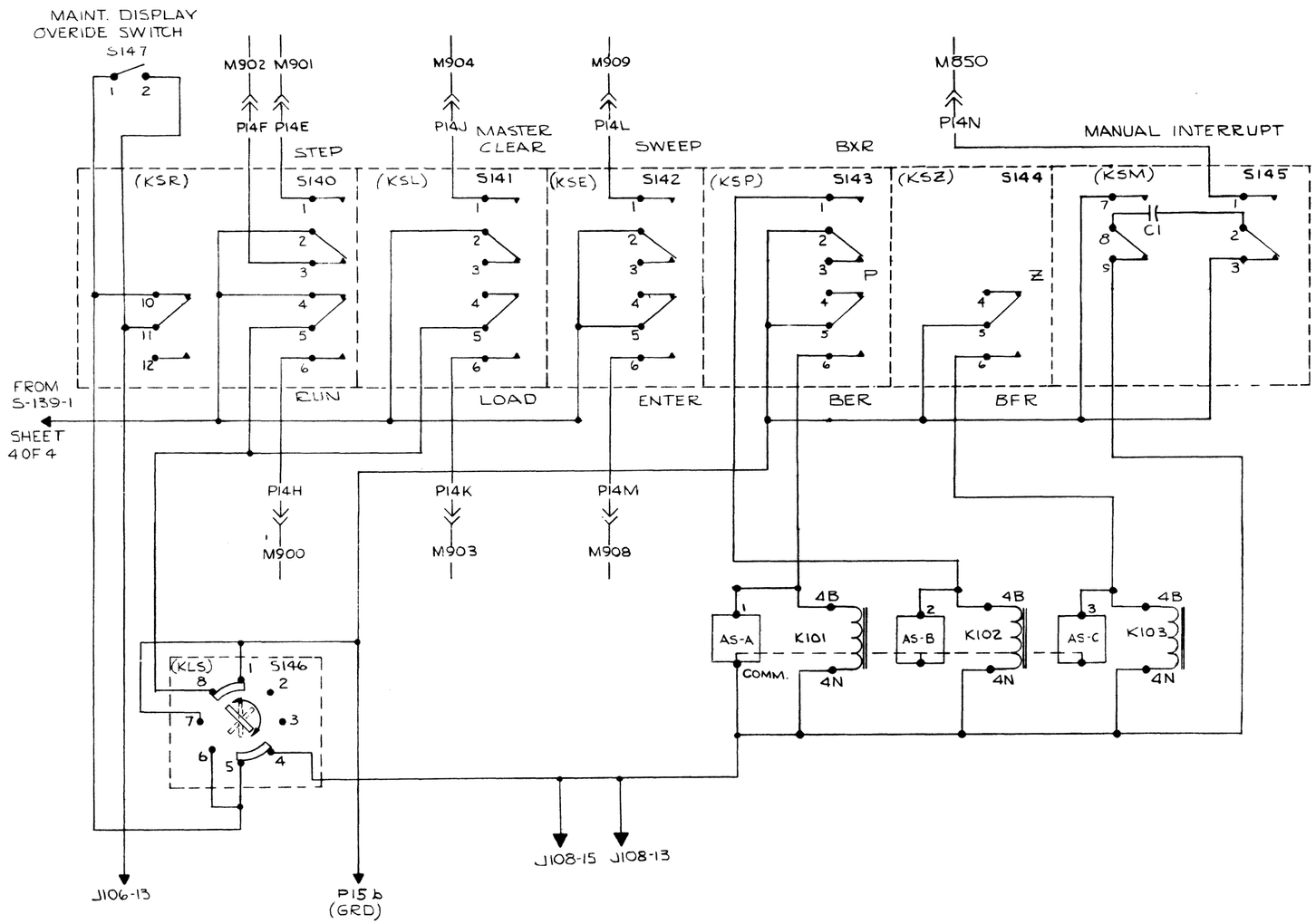

2. DOTTED LINES SHOW CONNECTIONS WITHIN A CONNECTOR OR COMPONENT.
1. KEY LOCK SWITCH KLS IS SHOWN IN NON-LOCK RUN POSITION. KLS IS ALSO SHOWN AS VIEWED FROM FRONT OF PANEL.

NOTES:

UNLESS OTHERWISE SPECIFIED DIMENSIONS ARE IN INCHES
TOLERANCES ON
FRACTIONS: ± ____ DECIMALS: ± ____ ANGLES: ± ____
DO NOT SCALE DRAWING
MATERIAL
FINISH

CONTROL DATA
CEDAR ENGINEERING DIVISION
DIGITAL ENGINEERING DEPARTMENT
MINNEAPOLIS, MINNESOTA

PRODUCT	8092 DISPLAY	
DRAWN	R. Alexander	4-13-68
CHECKED	V. Hilgar	11-13-68
ENGINEER	F. Swanson	4-13-68
APPROVED		

TITLE
SCHEMATIC DIAGRAM
8092 DISPLAY

SIZE C | DRAWING NO. 47032300 | REV B
SCALE | Page 23 | SHEET 1 OF 4

REVISIONS				
SYM	DESCRIPTION	E.C.O.	DATE	APPROVAL

P14U
P14V
P14X
-20 TO X-127-1 SHEET 3 OF 4
S130-1 SHEET 3 OF 4

X101 X102 X103 X104 X105 X106 X107 X108 X109 X110 X111 X112
X113 X114 X115 X116

J101 J102 J103

0 1 2 3 4 5 6 7 8 9 10 11
0 1 2 3

K101 A1 A2 A3 B1 B2 B3 C1 C2 C3 D1 D2 D3 E1 E2 E3 F1 F2 F3 H1 H2 H3 J1 J2 J3 L1 L2 L3 M1 M2 M3 N1 N2 N3 P1 P2 P3
K102 A1 A2 A3 B1 B2 B3 C1 C2 C3 D1 D2 D3 E1 E2 E3 F1 F2 F3 H1 H2 H3 J1 J2 J3 L1 L2 L3 M1 M2 M3 N1 N2 N3 P1 P2 P3

P13A P13B P13C P13D
I303 I313 I323 I333
I307 I300 I310 I320 I330
P15R P15S P15T P15U P15V
CR03 CR04 CR05 CR06 CR07
S114 S115 S116 S117 S118

P10A P10B P10C P10D P10E P10F P10H P10J P10K P10L P10M P10N P11A P11C P11D P11E P11F P11H P11J P11K P11L P11M P11N P11P P11R P11S P11T P11U P11V P11W P11X
X901 X801 X911 X811 X921 X821 X931 X831 X941 X841 X951 X851 X961 X861 X971 X871 X981 X881 X991 X891
P001 P011 P021 P031 P041 P051 P061 P071 P101 P111 P121 P131
P203 P213 P223 P233 P243 P253 P263 P273 P283 P293 P303 P313 M907
P15A P15B P15C P15D P15E P15F P15H P15J P15K P15L P15M P15N P15P
CR12 CR13 CR14 CR15 CR16 CR17 CR18 CR19 CR20 CR21 CR22 CR23
S101 S102 S103 S104 S105 S106 S107 S108 S109 S110 S111 S112 S113

"P" REGISTER

TAG REGISTER

47032300
B

ITEM	REQ'D.	PART NO.	DESCRIPTION	MATL.	MATL. SPEC.	NEXT ASSY.	USED ON	FINAL ASSY.	NEXT ASSY.
LIST OF MATERIAL						APPLICATION		QTY. REQ'D	

UNLESS OTHERWISE SPECIFIED
DIMENSIONS ARE IN INCHES AND TOLERANCES ARE:
FRACTIONS: ±1/64 DECIMALS: (0.00)±0.05 (0.000)±0.005 ANGLES: ±1°
BREAK ALL EDGES AND SHARP CORNERS .010 MAX.
DIMENSIONS APPLY AFTER PLATING OR HEAT TREAT.
BURRS: NO LOOSE BURRS PERMITTED. TIGHT BURRS PERMITTED IF THEY CANNOT BE REMOVED BY NORMAL HANDLING OR TUMBLING.
SURFACE FINISH: √ ALL INSIDE SURFACES √ ALL OUTSIDE SURFACES

	BY	DATE
DRAWN		
CHECKED		
ENG.		
PROD.		

FINISH:

NAME: SCHEMATIC DIAGRAM 8092 DISPLAY

CONTROL DATA CORP
CEDAR ENGINEERING DIVISION
8800 WEST 36TH ST.
MINNEAPOLIS 16 MINNESOTA

SIZE: B DWG. NO. 47032300
SCALE: NONE WT. SHEET 2 OF 4

REVISIONS							
REV.	ECO.	ZONE	DESCRIPTION	DRFT.	DATE	CHK'D	APPD.

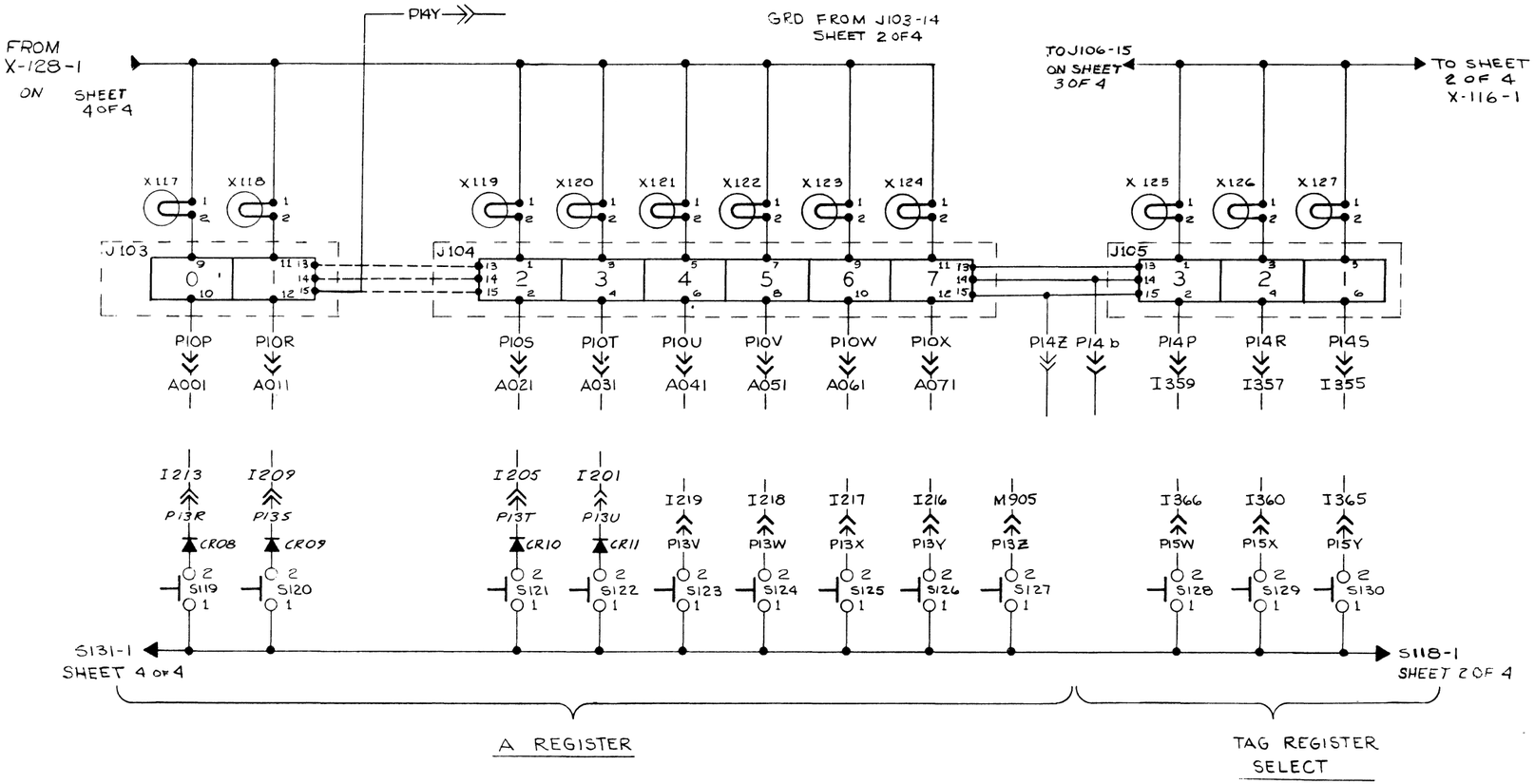

UNLESS OTHERWISE SPECIFIED DIMENSIONS ARE IN INCHES TOLERANCES ON FRACTIONS: ± DECIMALS: ± ANGLES: ±	CONTROL DATA CORPORATION	TITLE	SCHEMATIC DIAGRAM 8092 DISPLAY
DO NOT SCALE DRAWING	CEDAR ENGINEERING DIVISION DIGITAL ENGINEERING DEPARTMENT MINNEAPOLIS, MINNESOTA		
MATERIAL	PRODUCT 8092 DISPLAY		
FINISH	DRAWN	SIZE C	DRAWING NO. 47032300 REV B
	CHECKED		
	ENGINEER	SCALE	
	APPROVED		

REVISIONS							
REV.	ECO.	ZONE	DESCRIPTION	DRFT.	DATE	CHK'D	APPD.

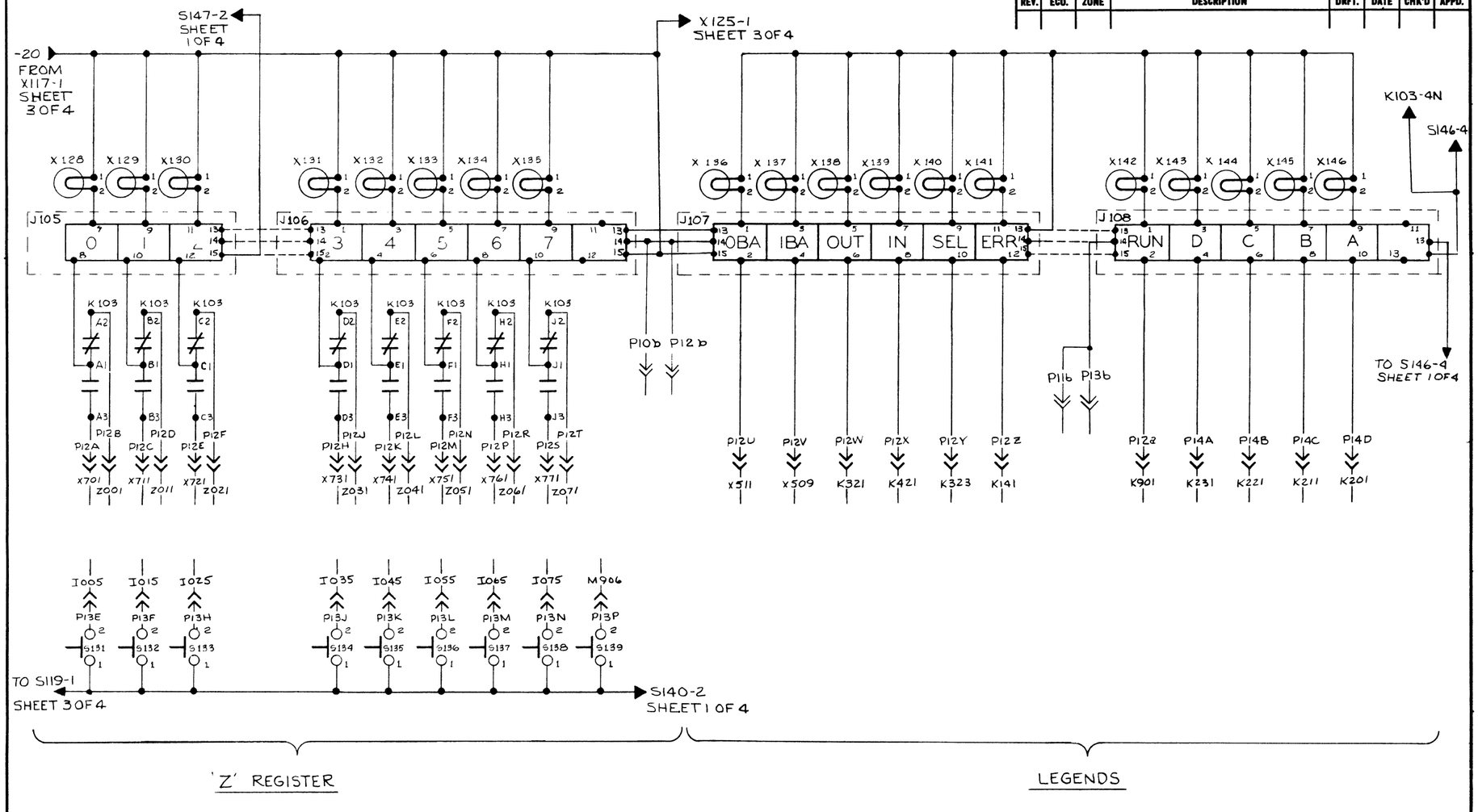

UNLESS OTHERWISE SPECIFIED DIMENSIONS ARE IN INCHES TOLERANCES ON FRACTIONS: ± DECIMALS: ± ANGLES: ±	CONTROL DATA CORPORATION	TITLE	SCHEMATIC DIAGRAM, 8092 DISPLAY
DO NOT SCALE DRAWING	CEDAR ENGINEERING DIVISION DIGITAL ENGINEERING DEPARTMENT		
MATERIAL	PRODUCT 8092 DISPLAY	SIZE C	DRAWING NO. 47032300 REV B
FINISH	DRAWN / CHECKED / ENGINEER / APPROVED	SCALE	SHEET 4 OF 4

REVISIONS							
REV.	ECO.	ZONE	DESCRIPTION	DRFT.	DATE	CHK'D	APPD.
A			RELEASED		3-22-66		

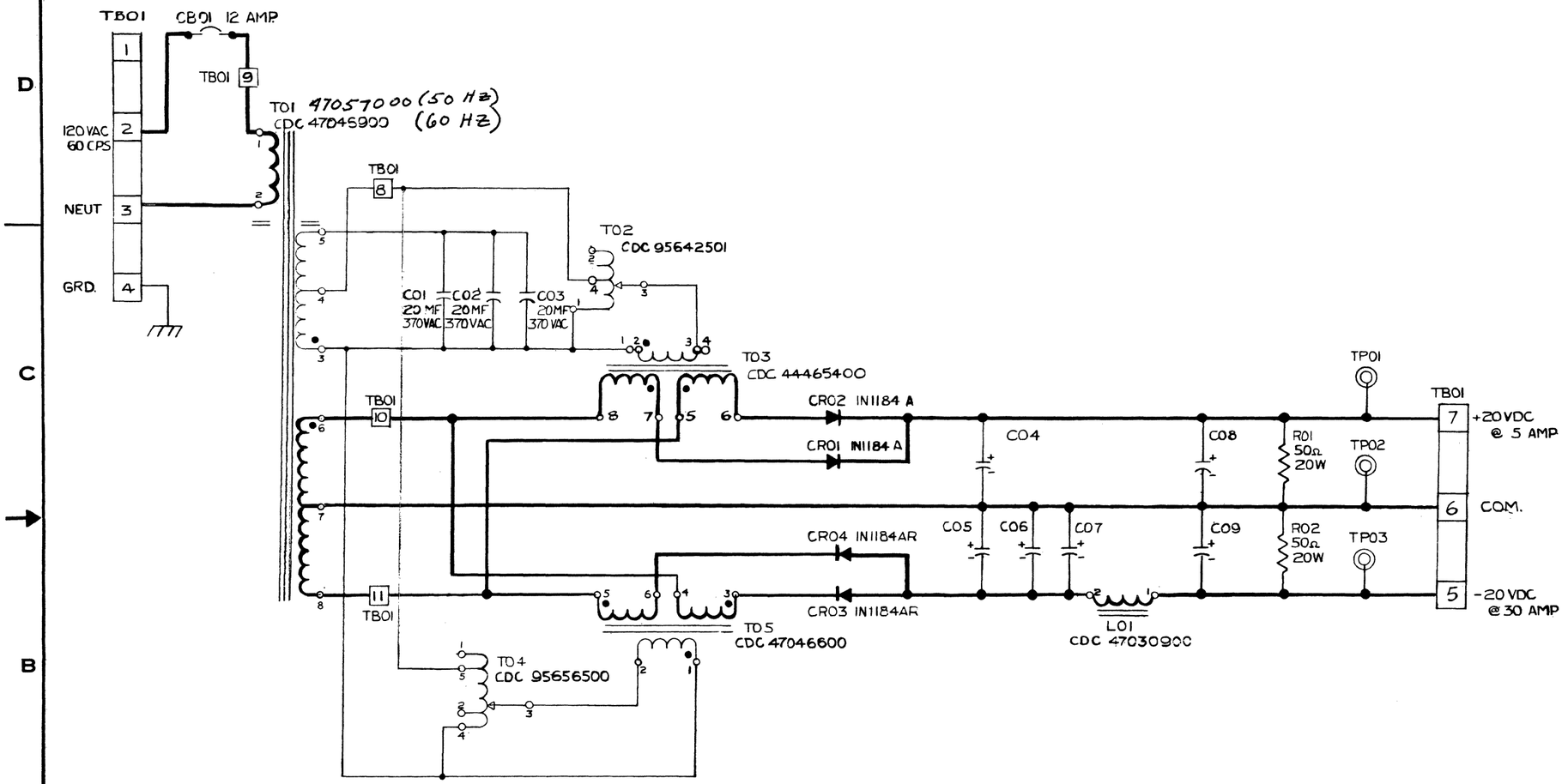

NOTE: C04 THROUGH C09 ARE 55,000 MFD @ 25 VDC.

UNLESS OTHERWISE SPECIFIED DIMENSIONS ARE IN INCHES TOLERANCES ON FRACTIONS: DECIMALS: ANGLES: ± ± ±
DO NOT SCALE DRAWING
MATERIAL
FINISH

CONTROL DATA

CEDAR ENGINEERING DIVISION
DIGITAL ENGINEERING DEPARTMENT
MINNEAPOLIS, MINNESOTA

PRODUCT	TELEPROGRAMMER	
DRAWN	D. SCOFIELD	12-3-65
CHECKED		12-3-65
ENGINEER		12/30/65
APPROVED		1/4/66

TITLE: SCHEMATIC, POWER SUPPLY FERRORESONANT, 60 CPS & 50 CPS

SIZE	DRAWING NO.	REV
C	47046500	A

SCALE —— Page 27 SHEET 1 OF 1

47046500

SHEET REV STATUS				REVISIONS							
4	3	2	1	REV.	ECO.	ZONE	DESCRIPTION	DRFT.	DATE	CHK'D	APPD.
A	A	A	A	A			RELEASED		6-14-67		6-15-67
A	A	A	B	B	80833	B-2	ADDED DIODES, DEL. ARC SUP	DS	7-20-67		7-21-67

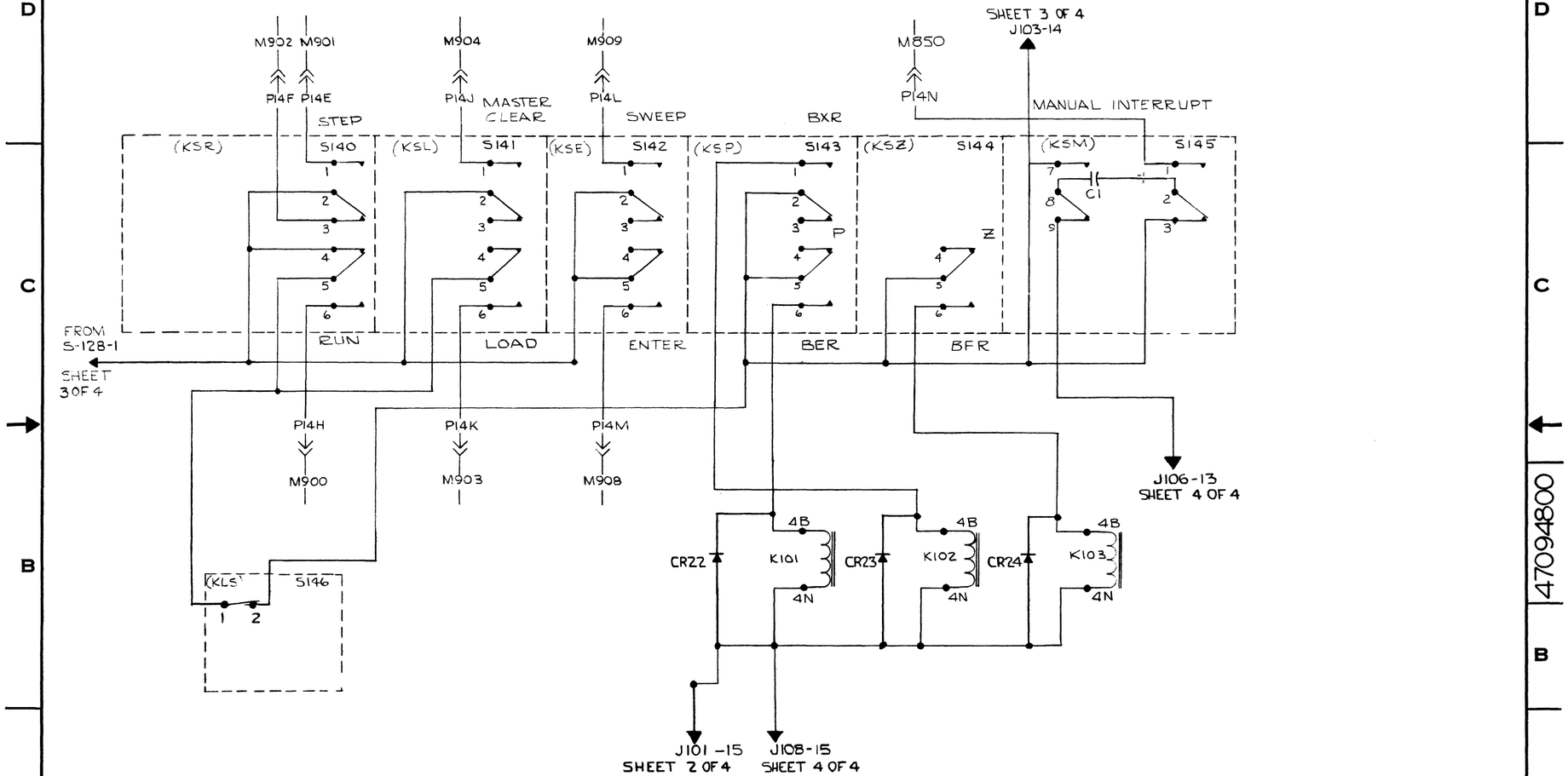

2. DOTTED LINES SHOW CONNECTIONS WITHIN A CONNECTOR OR COMPONENT.
1. KEY LOCK SWITCH KLS IS SHOWN IN NON-LOCK RUN POSITION.

NOTES:

UNLESS OTHERWISE SPECIFIED DIMENSIONS ARE IN INCHES
TOLERANCES ON FRACTIONS: DECIMALS: ANGLES:
± ± ±
DO NOT SCALE DRAWING
MATERIAL
FINISH

CONTROL DATA CORPORATION
CEDAR ENGINEERING DIVISION
DIGITAL ENGINEERING DEPARTMENT
MINNEAPOLIS, MINNESOTA

PRODUCT	8092 DISPLAY	
DRAWN	G. Taft	3-28-67
CHECKED		4-6-67
ENGINEER		4-6-67
APPROVED		4-6-67

TITLE
SCHEMATIC DIAGRAM
8092 DISPLAY

SIZE	DRAWING NO.	REV
C	47094800	B

SCALE
SHEET 1 OF 4

47094800

REVISIONS				
SYM	DESCRIPTION	E.C.O.	DATE	APPROVAL

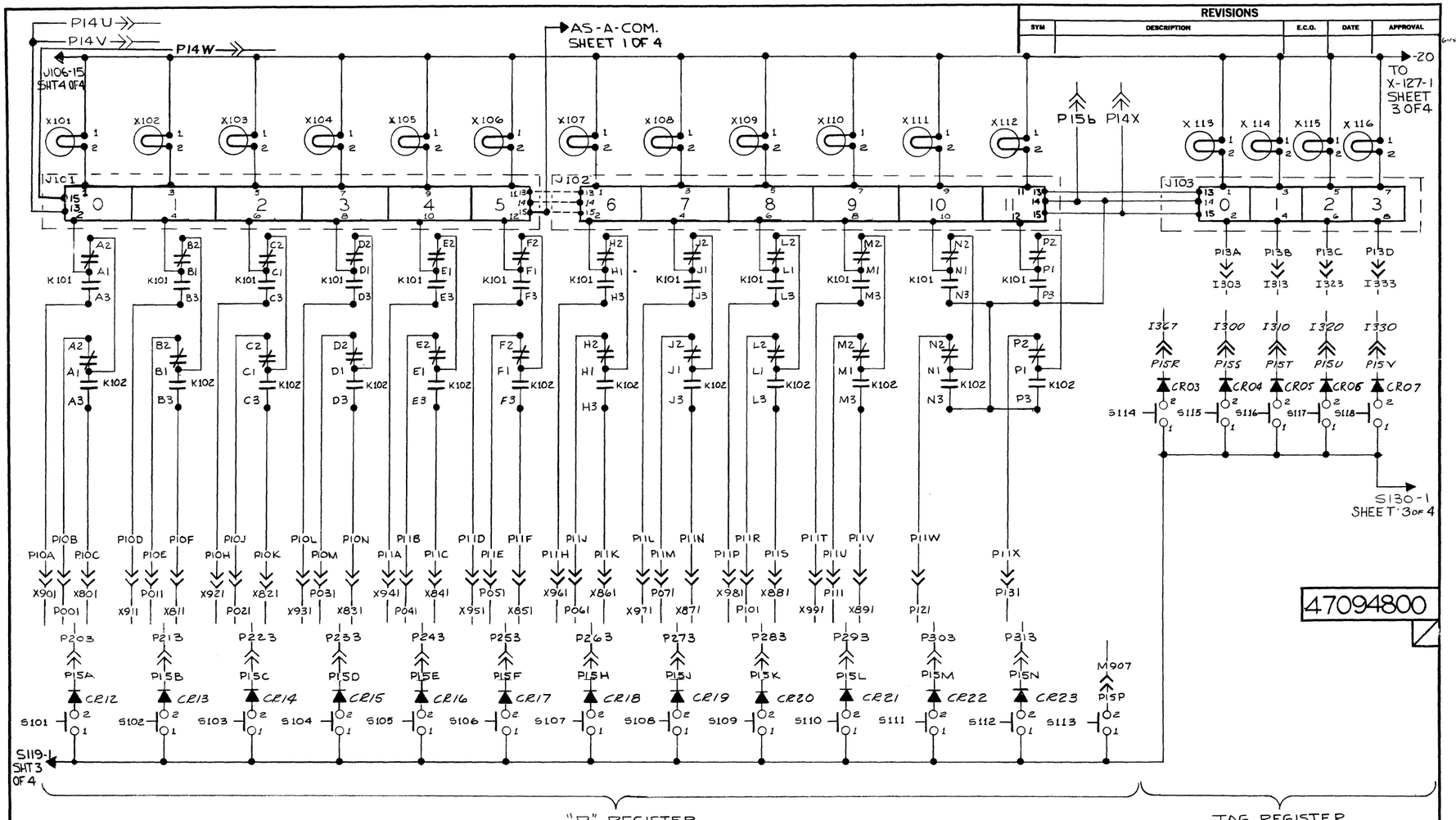

47094800

ITEM	REQD.	PART NO.	DESCRIPTION	MATL.	MATL. SPEC.	NEXT ASSY.	USED ON	FINAL ASSY.	NEXT ASSY.
LIST OF MATERIAL						APPLICATION		QTY. REQD.	

UNLESS OTHERWISE SPECIFIED
DIMENSIONS ARE IN INCHES AND TOLERANCES ARE:
FRACTIONS: ±1/64 DECIMALS: (0.00)±0.01 (0.000)±0.005 ANGLES: ±1°
BREAK ALL EDGES AND SHARP CORNERS .010 MAX.
DIMENSIONS APPLY AFTER PLATING OR HEAT TREAT.
BURRS: NO LOOSE BURRS PERMITTED. TIGHT BURRS PERMITTED IF THEY CANNOT BE DETECTED BY NORMAL VISION OR TOUCH.
SURFACE FINISH: √ ALL INSIDE SURFACES √ ALL OUTSIDE SURFACES

	BY	DATE
DRAWN		
CHECKED		
ENG.		
PROD.		

FINISH:

NAME: SCHEMATIC DIAGRAM 8092 DISPLAY

SCALE | WT.

CONTROL DATA CORP.
CEDAR ENGINEERING DIVISION
5806 WEST 36TH ST.
MINNEAPOLIS 16, MINNESOTA

DWG. NO. 47094800

SHEET 2 OF 4

REVISIONS							
REV.	ECO.	ZONE	DESCRIPTION	DRFT.	DATE	CHK'D	APPD.

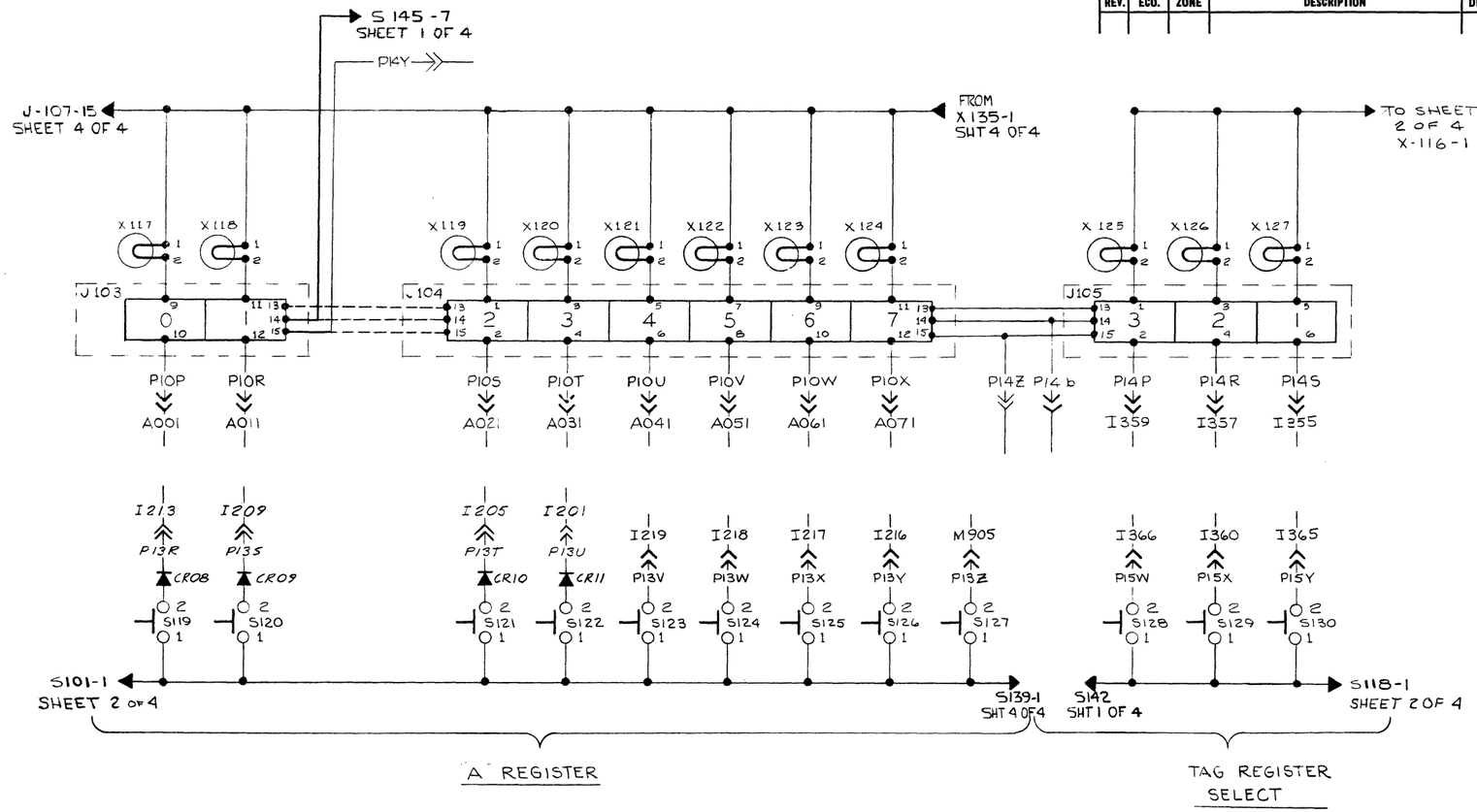

UNLESS OTHERWISE SPECIFIED DIMENSIONS ARE IN INCHES
TOLERANCES ON
FRACTIONS: ± DECIMALS: ± ANGLES: ±
DO NOT SCALE DRAWING
MATERIAL
FINISH

CONTROL DATA CORPORATION
CEDAR ENGINEERING DIVISION
DIGITAL ENGINEERING DEPARTMENT
MINNEAPOLIS, MINNESOTA

PRODUCT	8092 DISPLAY
DRAWN	
CHECKED	
ENGINEER	
APPROVED	

TITLE
SCHEMATIC DIAGRAM
8092 DISPLAY

SIZE C | DRAWING NO. 47094800 | REV
SCALE
SHEET 3 OF 4

47094800

REVISIONS						
REV.	ECO.	ZONE	DESCRIPTION	DRFT.	DATE	CHK'D	APPD.

X117-1 SHEET 3 OF 4

S145-9 SHEET 1 OF 4

X101-1 SHEET 2 OF 4

X124-1 SHT 3 OF 4

J105 J106 J107 J108

0 1 2 3 4 5 6 7 OBA IBA OUT IN SEL ERR RUN D C B A

K101-4N SHEET 1 OF 4

P10b P12b P116 P136

S127-1 SHEET 3 OF 4

"Z" REGISTER

LEGENDS

UNLESS OTHERWISE SPECIFIED DIMENSIONS ARE IN INCHES TOLERANCES ON FRACTIONS: ± DECIMALS: ± ANGLES: ±	CONTROL DATA CORPORATION
DO NOT SCALE DRAWING	CEDAR ENGINEERING DIVISION DIGITAL ENGINEERING DEPARTMENT MINNEAPOLIS, MINNESOTA
MATERIAL	PRODUCT 8092 DISPLAY
FINISH	DRAWN
	CHECKED
	ENGINEER
	APPROVED

TITLE: SCHEMATIC DIAGRAM, 8092 DISPLAY

SIZE C | DRAWING NO. 47094800 | REV

SCALE | SHEET 4 OF 4

47094800

COMMENT SHEET

MANUAL TITLE 8090 TELEPROGRAMMER Equipment Diagrams

PUBLICATION NO. 36810900 REVISION

FROM: NAME:

BUSINESS ADDRESS:

COMMENTS:

This form is not intended to be used as an order blank. Your evaluation of this manual will be welcomed by Control Data Corporation. Any errors, suggested additions or deletions, or general comments may be made below. Please include page number references and fill in publication revision level as shown by the last entry on the Record of Revision page at the front of the manual. Customer engineers are urged to use the TAR.

CUT ALONG LINE

AA3419 REV. 11/69 PRINTED IN U.S.A.

NO POSTAGE STAMP NECESSARY IF MAILED IN U. S. A.

FOLD ON DOTTED LINES AND STAPLE

COMMENT SHEET

MANUAL TITLE 8090 TELEPROGRAMMER Equipment Diagrams

PUBLICATION NO. 36810900 REVISION

FROM: NAME:

BUSINESS ADDRESS:

COMMENTS:

This form is not intended to be used as an order blank. Your evaluation of this manual will be welcomed by Control Data Corporation. Any errors, suggested additions or deletions, or general comments may be made below. Please include page number references and fill in publication revision level as shown by the last entry on the Record of Revision page at the front of the manual. Customer engineers are urged to use the TAR.

CUT ALONG LINE

AA3419 REV. 11/69 PRINTED IN U.S.A.

NO POSTAGE STAMP NECESSARY IF MAILED IN U. S. A.

FOLD ON DOTTED LINES AND STAPLE

STAPLE STAPLE STAPLE

FOLD FOLD FOLD FOLD

FIRST CLASS
PERMIT NO. 8241

MINNEAPOLIS, MINN.

BUSINESS REPLY MAIL
NO POSTAGE STAMP NECESSARY IF MAILED IN U.S.A.

POSTAGE WILL BE PAID BY
CONTROL DATA CORPORATION
4201 North Lexington Ave.
St. Paul, Minnesota 55112

FIRST CLASS
PERMIT NO. 8241

MINNEAPOLIS, MINN.

BUSINESS REPLY MAIL
NO POSTAGE STAMP NECESSARY IF MAILED IN U.S.A.

POSTAGE WILL BE PAID BY
CONTROL DATA CORPORATION
4201 North Lexington Ave.
St. Paul, Minnesota 55112

CUT ALONG LINE

FOLD FOLD FOLD FOLD

>>> CUT OUT FOR USE AS LOOSE-LEAF BINDER TITLE TAB

CONTROL DATA
CORPORATION

8100 34th AVE. SO., MINNEAPOLIS, MINN. 55440

LITHO IN U.S.A.