TSZ07 Tape Drive

digital™

Installation/Owner's Manual

Order Number: EK–TSZ07–IN–003

TSZ07 Tape Drive

Installation/Owner's Manual

Order Number: EK–TSZ07–IN–003

Prepared by
Information Design and Consulting

Digital Equipment Corporation • Merrimack, NH 03054

September 1992

The information in this document is subject to change without notice and should not be construed as a commitment by Digital Equipment Corporation. Digital Equipment Corporation assumes no responsibility for any errors that may appear in this document.

No responsibility is assumed for the use or reliability of software on equipment that is not supplied by Digital Equipment Corporation or its affiliated companies.

Restricted Rights: Use, duplication, or disclosure by the U.S. Government is subject to restrictions set forth in subparagraph (c)(1)(ii) of the Rights in Technical Data and Computer Software clause at DFARS 252.227-7013.

Copyright ©Digital Equipment Corporation 1992.

All Rights Reserved.
Printed in U.S.A.

CDA, DECUS, UNIBUS, DDIF, DEC, DECstation, DECwindows, MicroVAX, PDP, Q–bus, ULTRIX, VMS, VAX, VAXBI, VAXstation and the DIGITAL logo are trademarks of Digital Equipment Corporation.

This document was prepared using VAX DOCUMENT, Version 2.1.

Contents

Preface vii

Chapter 1 Description

1.1 Introduction 1–1
1.2 Description 1–1

Chapter 2 Installation

2.1 Introduction 2–1
2.2 Site Preparation 2–2
2.3 Installing the Table Top Models (TSZ07-CA, -FA) 2–2
2.3.1 Unpacking the TSZ07-CA, -FA 2–2
2.3.2 Removing Packing Material from the TSZ07-CA, -FA . . . 2–4
2.3.3 Unpacking the Accessories Carton 2–6
2.3.4 Installing the Cables on the TSZ07-CA, -FA 2–6
2.3.4.1 SCSI Cabling 2–6
2.3.4.2 Power Cord 2–10
2.4 Installing the Cabinet Models (TSZ07-BA/BB, -EA/EB) 2–11
2.4.1 Unpacking The Cabinet Models (TSZ07-BA/BB, -EA/EB) 2–11
2.4.2 Tools and Working Space 2–13
2.4.3 Removing the TSZ07-BA/BB, -EA/EB from the Carton 2–14
2.4.4 Removing the Cabinet from the Skid 2–16

2.4.5 Installing the Cabinet Stabilizer 2–19
2.4.6 Remove Packing Material from the TSZ07-BA/BB, -EA/EB 2–22
2.4.7 Opening the Cabinet TSZ07, Alternate Method 2–24
2.4.8 Unpacking the Small Carton 2–25
2.4.9 Installing Cables on the TSZ07-BA/BB, -EA/EB 2–25
2.5 Installing Rackmountable Models 2–25
2.5.1 Unpacking Rackmountable Models (TSZ07-AA, -DA) . . . 2–26
2.5.2 Removing Packing Material from the TSZ07-CA, -FA . . 2–26
2.5.3 Unpacking the Accessories Carton 2–28
2.5.4 Installing the Rackmountable Tape Drive (TSZ07-AA, -DA) 2–28
2.5.5 Installing the Slides on the Rack 2–28
2.5.6 Installing Cables on the TSZ07-AA, -DA 2–30
2.6 Running Diagnostics 2–31
2.6.1 VMS Systems 2–31
2.6.2 ULTRIX Systems 2–31
2.6.3 Onboard Diagnostics 2–32

Chapter 3 Operation

3.1 Introduction 3–1
3.2 Controls and Indicators 3–2
3.2.1 AC Power Switch 3–2
3.2.2 DC Power Switch 3–3
3.2.3 Alphanumeric Display 3–4
3.2.4 LOAD/REWIND (1) Switch 3–4
3.2.5 UNLOAD (2) Switch 3–4
3.2.6 ONLINE (3) Switch 3–5
3.2.7 WRT EN/TEST (4) Switch 3–5
3.2.8 DENSITY SELECT (5) Switch 3–5
3.3 Unit Address 3–5
3.4 Density Selection 3–6
3.4.1 Power-Up Density Selection 3–6
3.4.2 Host Density Selection 3–7
3.4.3 Automatic Density Selection 3–7

3.4.4 User Density Selection 3–7
3.5 Activity Messages 3–7
3.6 Automatic Tape Loading 3–8
3.6.1 Manual Tape Loading 3–11
3.6.2 Loading High-Static Tape 3–14
3.7 Unloading Tape Automatically 3–14
3.7.1 Manual Unload of Tape 3–16
3.8 Tape Drive Errors 3–16

Chapter 4 Preventive Maintenance

4.1 Introduction 4–1
4.2 Maintenance 4–1
4.2.1 Cleaning The Tape Path 4–2
4.2.2 Sensors 4–2
4.2.3 Air Filter 4–4

Appendix A Accessories

Figures

1 Models of TSZ07 xii
2–1 TSZ07 Front Door 2–3
2–2 Table Top Enclosure, Top Access 2–4
2–3 TSZ07 Cover Retaining Arm - Table Top Model 2–5
2–4 TSZ07 Rear Panel 2–7
2–5 Typical Standalone SCSI Configurations 2–8
2–6 Typical Daisy Chained SCSI Configurations 2–9
2–7 Cabinet Carton Removal 2–12
2–8 Cabinet Working Space 2–13
2–9 Unpacking Sequence 2–15
2–10 Raising Leveling Feet 2–16
2–11 Deskidding the Cabinet 2–17
2–12 Opening Cabinet Door 2–18
2–13 Installing the Cabinet Stabilizer 2–21

2–14 Opening Cabinet Lid 2–23
2–15 TSZ07 Cover Retaining Arm - Rackmount Model 2–27
2–16 Rack Mounting the TSZ07 2–29
3–1 Front Panel 3–2
3–2 Write Enable Ring 3–9
3–3 Inserting the Tape Reel 3–10
3–4 Location of the Manual Release Switch 3–12
3–5 Tape Path 3–13
4–1 Tape Path and Sensors 4–3
4–2 Air Filter 4–5

Tables

2–1 Stabilizer Kit Contents 2–19
3–1 Activity Message 3–8
3–2 Error Messages 3–17
A–1 Accessories A–1

Preface

This manual provides the information needed to install and operate the TSZ07 Tape Drive.

Structure of this Manual

The manual consists of the following chapters and appendices:

Chapter 1, System Overview – Includes a general description of the system and its components, and explains the system features. It also lists the available system variations.

Chapter 2, Unpacking and Installing – Explains how to prepare the site and how to unpack, install, and configure the system.

Chapter 3, Operation – Describes the system controls and indicators, and explains how to use the console commands.

Chapter 4, Preventive Maintenance – Describes the preventive maintenance schedule.

Appendix A, Accessories – Contains a list of the available accessories for the TSZ07 Tape Drive.

Related Documentation

- *KZQSA Module Installation Guide* (EK-KZSQA-IG)
- *MicroVAX Diagnostic Monitor User's Guide* (AA-FM7AE-DN)
- *TSZ07 Tape Drive Technical Manual* (EK-TSZ07-TM)
- *TSZ07 Tape Drive Pocket Service Guide* (EK-TSZ07-PG)
- *H9642 Cabinet Maintenance Guide* (EK-187AA-MG)
- *Site Environmental Preparation Guide* (EK-CSEPG-MA)

Notes, Cautions, and Warnings

Where notes, cautions, and warnings are used in this document, specific types of information are highlighted as follows:

NOTE – Calls the attention to any item of information that may be of special importance to the reader.

CAUTION – Contains essential information to avoid damage to the equipment.

WARNING – Contains essential information for the safety of the user.

FCC USER STATEMENT

NOTICE:

This equipment generates, uses, and may emit radio frequency energy. The equipment has been type tested and found to comply with the limits for a Class A computing device pursuant to Subpart J of Part 15 of FCC rules, which are designed to provide reasonable protection against such radio frequency interference. Operation of this equipment in a residential area may cause interference in which case the user at his own expense will be required to take whatever measures may be required to correct the interference.

この装置は，商工業地域で使用される第一種情報装置です。住宅地域又はその隣接した地域で使用するとラジオ，テレビジョン受信機等に受信障害を与えることがあります。　VCCI－1＊

Für Bundesrepublik Deutschland und Berlin (West) For Federal Republic of Germany und West Berlin Pour la République féderale d'Allemagne et Berlin Ouest

Hochfrequenzgerätezulassung und Betriebsgenehmigung

Bescheinigung des Herstellers/Importeurs

Hiermit wird bescheinigt, daß die Einrichtung in Übereinstimmung mit den Bestimmungen der DBP-Berfügung 523/1969, Amtsblatt 113/1969, und Grenzwertklasse "A" der VDE0871, funkentstört ist.

Das Zentralamt für Zulassungen im Fernmeldewesen der Deutschen Bundespost (DBP), hat diesem Gerät eine FTZ-Serienprüfnummer zugeteilt.

Betriebsgenehmigung
Hochfrequenzgeräte dürfen erst in Betrieb genommen werden, nachdem hiefür von dem für den vorgesehenen Aufstellungsort zuständigen Fernmeldeamt mit Funkstörungsmeßstelle die Genehmigung erteilt ist. Als Antrag auf Erteilung einer Genehmigung dient eine Anmeldepostkarte (Anhang des Handbuches) mit Angabe der FTZ-Serienprüfnummer. Der untere Teil der Postkarte ist vom Betreiber zu vervollständigen und an das örtliche Fernmeldeamt zu schicken. Der obere Teil bleibt beim Gerät.

Betreiberhinweis
Das Gerät wurde funktechnisch sorgfältig entstört und geprüft. Die Kennzeichnung mit der Zulassungsnummer bietet Inhen die Gewähr, daß dieses Gerät keine anderen Fernmeldeanlagen einschließlich Funkanlagen stört.
Sollten bei diesen Geräten ausnahmsweise trotzdem, z.B. im ungünstigsten Fall beim Zusammenschalten mit anderen EDV- Geräten, Funkstörungen auftreten kann das im Einzelnen zusätzliche Funkstörungsmaßnahmen durch den Benutzer erfordern. Bei Fragen hierzu wenden Sie sich bitte an die örtlich zuständige Funkstörungsmeßstelle Ihres Fernmeldeamtes.

Externe Datenkabel
Solite ein Austausch der von Digital Spezifizierten Datenkabel nötig werden, muß der Betreiber für eine einwandfreie Funkentsörung sicherstellen, daß Austauschkabel im Aufbau und Abschirmqualität dem Digital Originalkabel entsprechen.

Kennzeichnung

Die Geräte werden bereits in der Fertigung mit der Zulassungsnummer gekennzeichnet und mit einer Anmeldepostkarte versehen. Sollte Kennzeichnung und Anmeldepostkarte übergangsweise nicht mit ausgeliefert werden kontaktieren Sie bitte das nächstgelegene Digital Equipment Kundendienstbüro.

Figure 1: Models of TSZ07

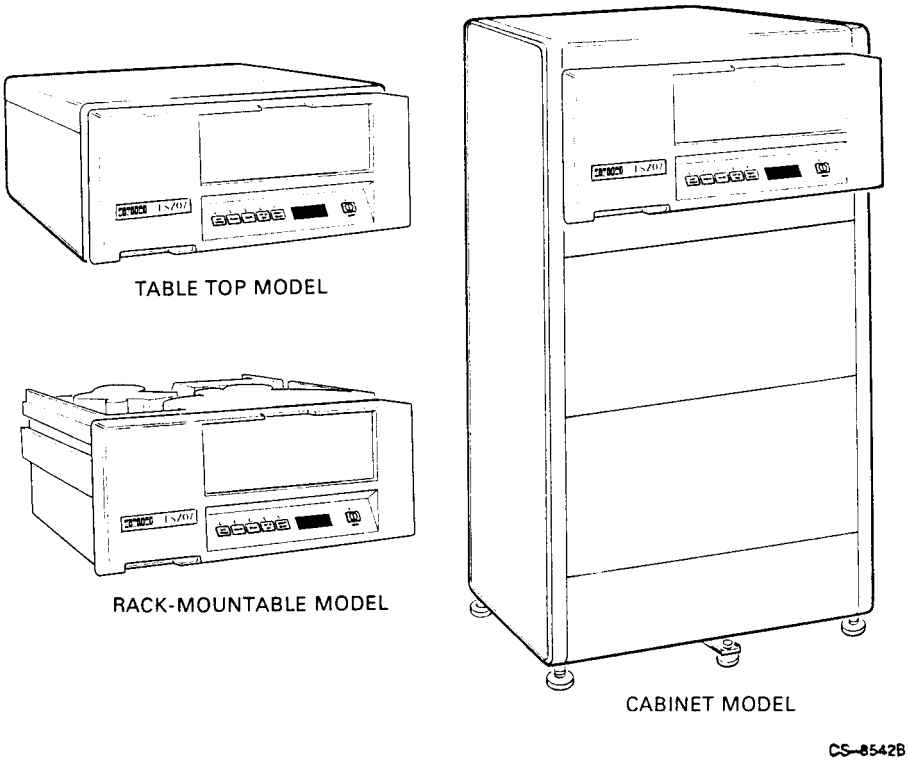

Chapter 1

Description

1.1 Introduction

This chapter contains a brief description of the TSZ07 Tape Drive. Figure 1 shows the available models.

1.2 Description

The Digital TSZ07 Tape Drive is a high-capacity streaming half-inch tape drive for data interchange, archival storage, software distribution, on-line transaction management, and backup for small and large computing systems. The TSZ07 Tape Drive, which is SCSI 2 compatible, is available in the following configurations (see Figure 1):

- Standard 40-inch high 19-inch EIA/RETMA Cabinet models
- Rack-mountable model
- Table top model
- Single-ended and differential SCSI

The tape drive reads and writes data at 1600 and 6250 bpi. The drive uses the industry standard half-inch width tape with any of four reel sizes, 6.0, 7.0, 8.5, and 10.5 inches. In the TSZ07, the 6-inch reels

have a lower load reliability (85%) than the larger reels (98%) for ANSI compatible tapes. Any reel with less than 600 feet of tape may require manual loading (the 6-inch reel holds 600 feet). The TSZ07 requires at least 300 feet of tape on the reel to operate.

Chapter 2

Installation

2.1 Introduction

This chapter explains how to unpack, install, and configure the tape drive. There are three unpacking procedures:

- Cabinet Models (TSZ07-BA/BB, -EA/EB)
- Table Top Models (TSZ07-CA, -FA)
- Rackmountable Models (TSZ07-AA, -DA)

TSZ07 models with -BA/BB, -CA, and -AA designations are single-ended drives. TSZ07 models with -EA/EB, -FA, and -DA designations are differential drives.

CAUTION

Single-ended drives (TSZ07-AA, -BA/BB, -CA) can not be connected to the same SCSI bus as the differential drives (TSZ07-DA, -EA/EB, -FA). The differential drives require a differential SCSI adapter or interface.

2.2 Site Preparation

No special site preparation is required, although peripherals operating in office areas can be affected by static discharge, temperature changes, and extremes of humidity. These conditions may cause poorer operation and decrease the dependability of the TSZ07 Tape Drive. Good site planning will decrease these effects and ensure dependable operation. Use the site preparation data sheets in the *Site Environmental Preparation Guide* for information on environmental conditions that can effect the TSZ07 Tape Drive.

The TSZ07 Tape Drive is equipped with a cooling fan to maintain a safe internal operating temperature. The power supply has an over-temperature sense circuit which disables all power supply output when activated. Cycling the rear panel ac power switch restores normal operation.

So that air flow is not restricted, a minimum clearance of two inches is required at the tape drive's rear panel. The front panel must not be covered.

2.3 Installing the Table Top Models (TSZ07-CA, -FA)

Installation of the table top TSZ07 requires the following:

1. Unpacking the TSZ07.
2. Unpacking the accessories box.
3. Installing the cables.

When these procedures are complete you can operate the TSZ07 (see Chapter 3 for operating information).

2.3.1 Unpacking the TSZ07-CA, -FA

The table top TSZ07 is shipped in one large and one small carton. The large carton contains the TSZ07 tape transport. The smaller carton contains documentation, a cleaning kit, a SCSI cable, a power cord, and a reel of magnetic tape. There is a SCSI terminator mounted on the rear of the TSZ07.

Remove the TSZ07 and all other items from the shipping carton and place the TSZ07 on a flat surface. After unpacking the TSZ07, check the shipping documents to ensure that the correct model has been shipped.

If anything is missing, damaged, or incorrect, contact the dealer from whom the equipment was ordered.

Remove any tape securing the front door (see Figure 2-1). **The TSZ07 is shipped with a plastic packing ring on the take up hub which must be removed before it can be operated.** To remove the packing ring, place the TSZ07 in the tape access position, as described in the following section.

Figure 2–1: TSZ07 Front Door

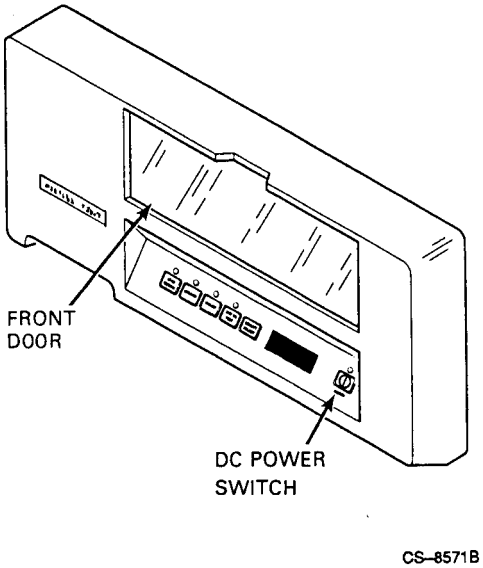

2.3.2 Removing Packing Material from the TSZ07-CA, -FA

To place the TSZ07 in the tape access position, perform the following:

NOTE

Step 1 applies to early versions of the TSZ07 which have latches that engage the top cover. If these latches are not present, proceed to step 2.

1. Push down on the top front corners (see Figure 2–2) to disengage the latch, then lift the enclosure lid.

Figure 2–2: Table Top Enclosure, Top Access

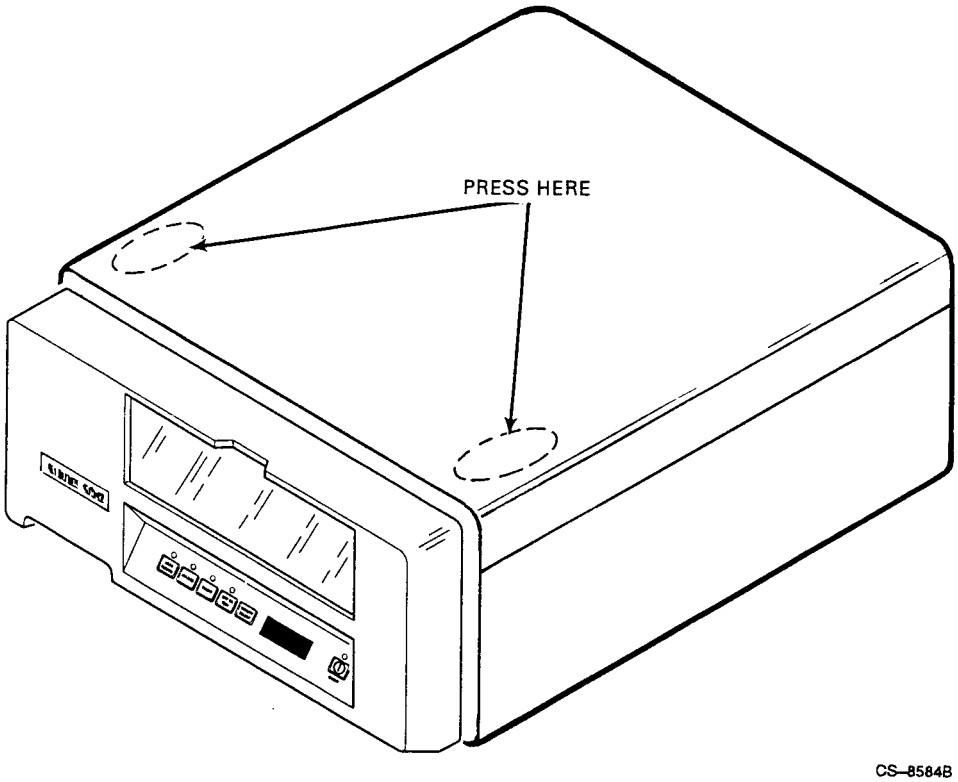

2. Raise the top cover and place the cover retaining arm in the recess next to the tape path. See Figure 2–3.

Figure 2–3: TSZ07 Cover Retaining Arm - Table Top Model

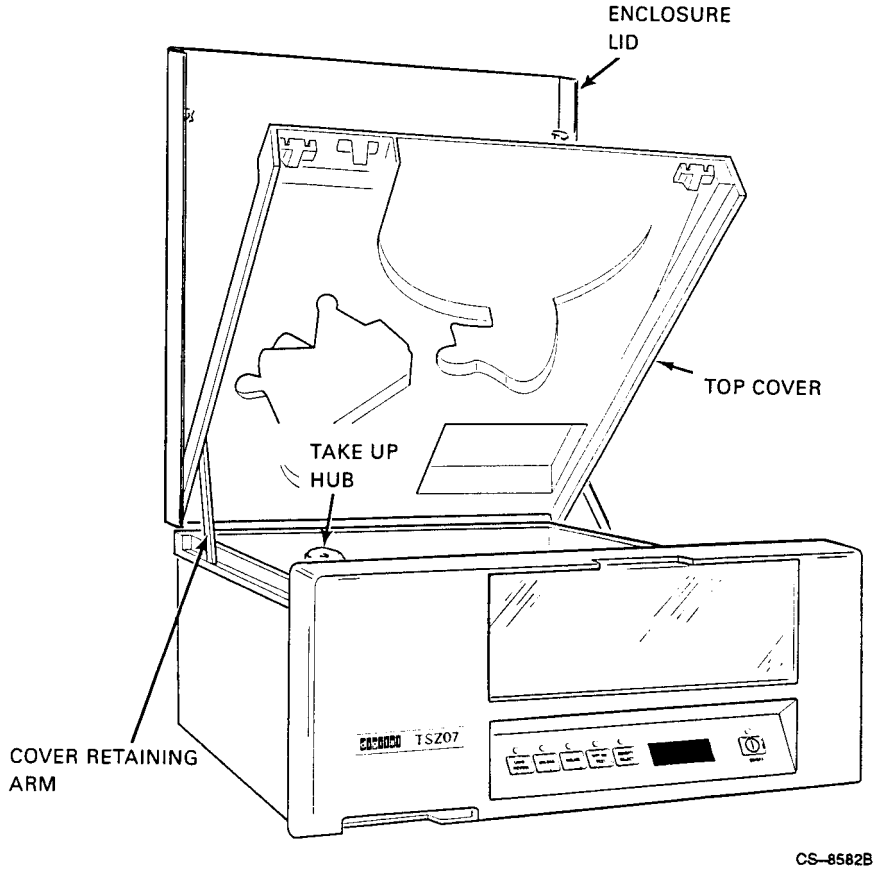

You can now remove the packing ring from the take-up hub.

To close the table top TSZ07 enclosure, perform the following:

1. Lift the cover retaining arm (see Figure 2–3).
2. Close the top cover of the tape drive.
3. Close the enclosure lid by releasing the latch (see Figure 2–2), closing the lid, and pushing down on the top front corners of the enclosure lid until the latch engages.

2.3.3 Unpacking the Accessories Carton

Open the accessories carton and remove its contents. Check that the kit contains the following:

- *TSZ07 Tape Drive Installation/Owner's Manual*
- *TSZ07 Tape Drive Technical Manual*
- Tape cleaning kit
- Magnetic tape (2400 feet, blank)
- SCSI data/control cables (BC06P-06, BC56H-06, BC13N-25)
- Country specific ac power cord
- FTZ postcard (German kit)

If any item is damaged, missing, or incorrect, contact the dealer from whom the system was purchased.

2.3.4 Installing the Cables on the TSZ07-CA, -FA

To operate the TSZ07, you must first connect the SCSI connector cable and the power cable.

2.3.4.1 SCSI Cabling

Bus terminators are required at each end of the SCSI bus. When the TSZ07 is configured as the last device on the SCSI bus, a terminator must be installed on the open connector (see Figure 2–4). A terminator is installed on the TSZ07 when shipped.

CAUTION

Single-ended and differential SCSI busses require different termination. Be sure to use the terminators marked "differential" with the differential drive (the terminators are supplied with the drive).

Figure 2–4: TSZ07 Rear Panel

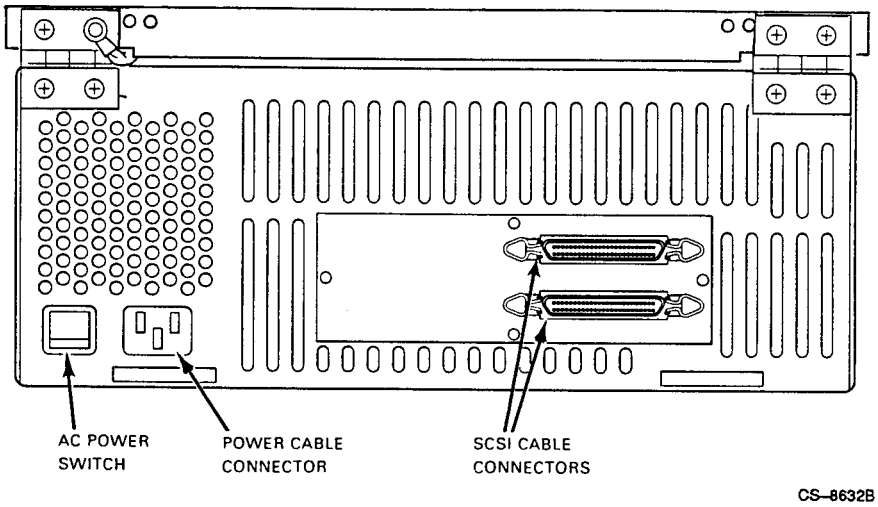

Supported SCSI bus configurations for the TSZ07 Tape Drive are shown in Figures 2-5 and 2-6.

Figure 2–5: Typical Standalone SCSI Configurations

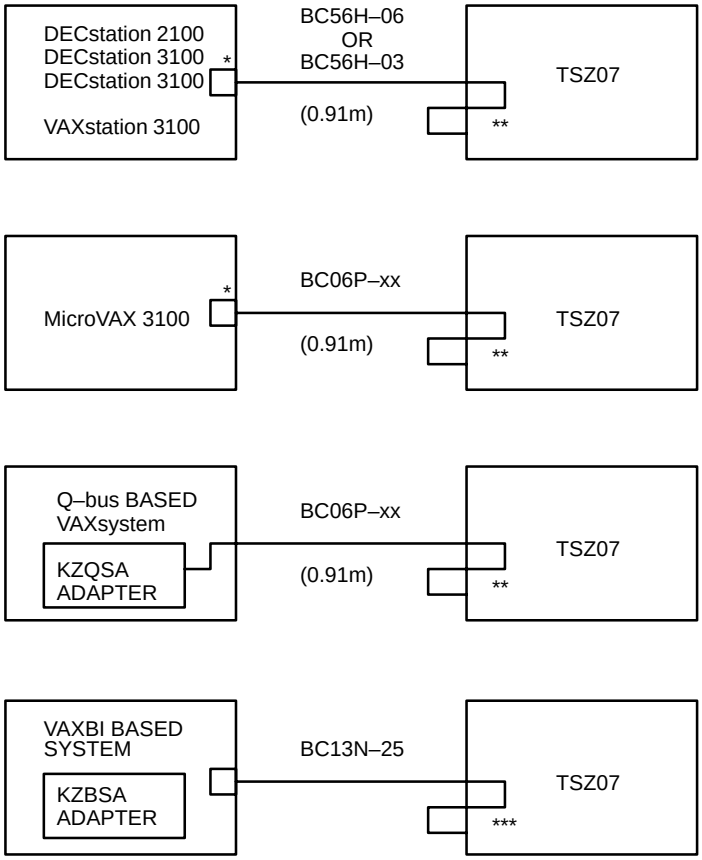

* INTERNAL SCSI BUS TERMINATOR
(P/O SCSI MSC MODULE).

** EXTERNAL SCSI BUS TERMINATOR

*** EXTERNAL DIFFERENTIAL TERMINATOR

CS–9051

Figure 2–6: Typical Daisy Chained SCSI Configurations

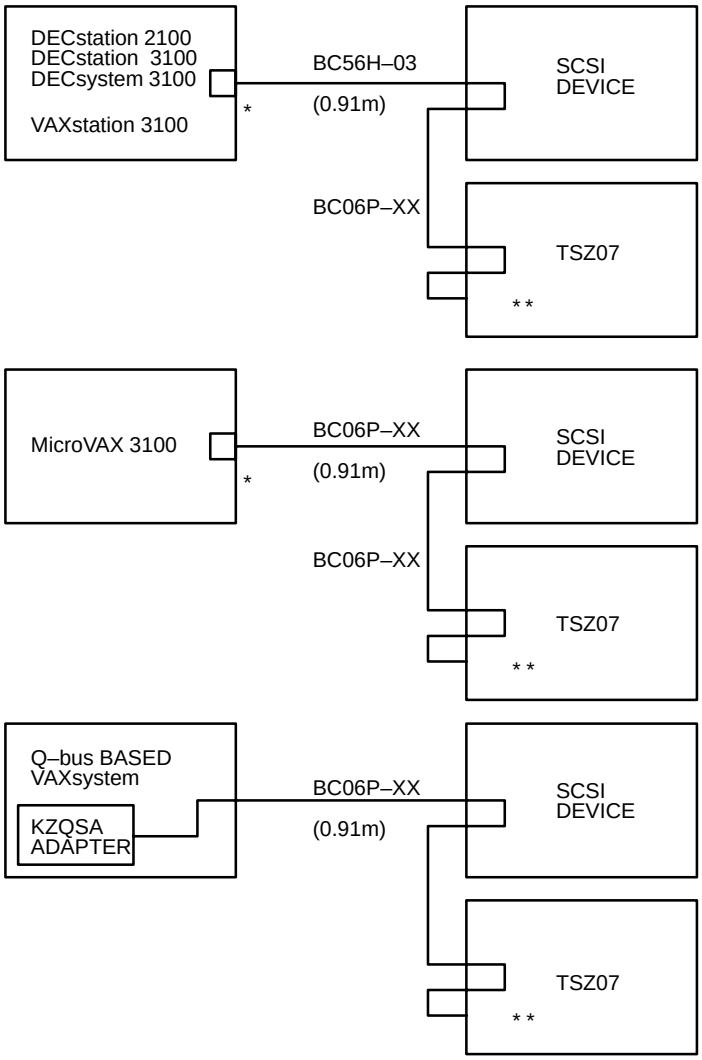

* INTERNAL SCSI BUS TERMINATOR
(P/O SCSI MSC MODULE).

** EXTERNAL SCSI BUS TERMINATOR

CS–8545

Additional technical information on the interface and the connectors is available in the Module Installation Guide (see the Related Documentation section).

The ideal cable impedance match with terminators is 132 ohms. A characteristic impedance of 100 ohms ±10% is recommended for unshielded flat or twisted-pair cables; a characteristic impedance greater than 90 ohms is preferred for shielded cables. Cables of different impedances should not be used. A minimum conductor size of 28 AWG is required. Twisted-pair cable must not have less than one twist per inch. Each end of the twisted pair ground wire must be connected to the chassis ground.

CAUTION

Connect the interface cables and terminator, if needed, before switching on the drive. Connecting either while the drive is already on may blow the fuse on the interface circuit board.

For single-ended applications a 50-conductor flat cable or 25-signal twisted-pair cable is required. The maximum cable length is 6 meters (19.7 feet) including all internal cabling.

2.3.4.2 Power Cord

An ac power cord is shipped in the country kit. Connect the power cord to the rear panel (see Figure 2–4). The autoranging power supply selects the voltage and frequency range automatically. With the power applied, the TSZ07 is ready for operation (see Chapter 3 for operating information). Note that you may have to change the Unit Address (default = 4) to match the needs of your installation.

CAUTION

An abnormal interruption of system operation can occur if the ac power is disconnected (power cord disconnected or ac power switch turned off (0)) from the TSZ07 or if the front panel ON/OFF switch is cycled while the system is running. Always shut down the host system before turning off power to the tape drive.

2.4 Installing the Cabinet Models (TSZ07-BA/BB, -EA/EB)

Installation of the Cabinet TSZ07 requires the following:

1. Unpacking the TSZ07.
2. Unpacking the accessories box.
3. Installing the cables.

When these procedures are complete you can operate the TSZ07 (see Chapter 3 for operating information).

2.4.1 Unpacking The Cabinet Models (TSZ07-BA/BB, -EA/EB)

The TSZ07-BA/BB and TSZ07-EA/EB cabinet models are shipped in one skid mounted carton (see Figure 2–7) and two smaller cartons. The carton on the skid contains the TSZ07 tape transport cabinet and the ramps for offloading the cabinet. The smaller cartons contain documentation, a cleaning kit, a SCSI 2 cable, and a reel of magnetic tape.

After unpacking the TSZ07, check the shipping documents to ensure that the correct model has been shipped. If anything is missing, damaged, or incorrect, contact the dealer from whom the equipment was ordered.

Figure 2–7: Cabinet Carton Removal

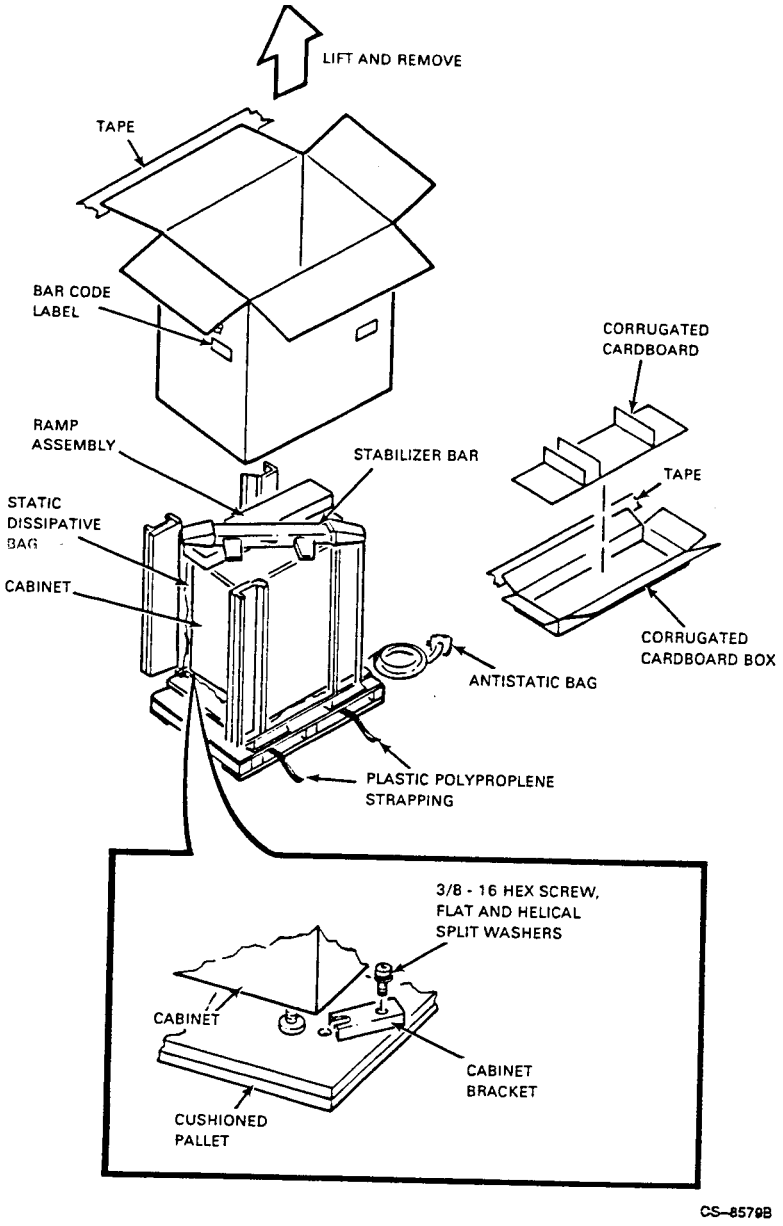

2.4.2 Tools and Working Space

The following tools are required for unpacking the cabinet model TSZ07.

- Scissors
- 9/16-inch wrench
- 11/16-inch wrench
- 3/4-inch wrench
- 5/32-inch hex key

Also, a space of approximately 3 meters (10 feet) on each side is required for moving the cabinet off of the shipping skid (see Figure 2–8).

Figure 2–8: Cabinet Working Space

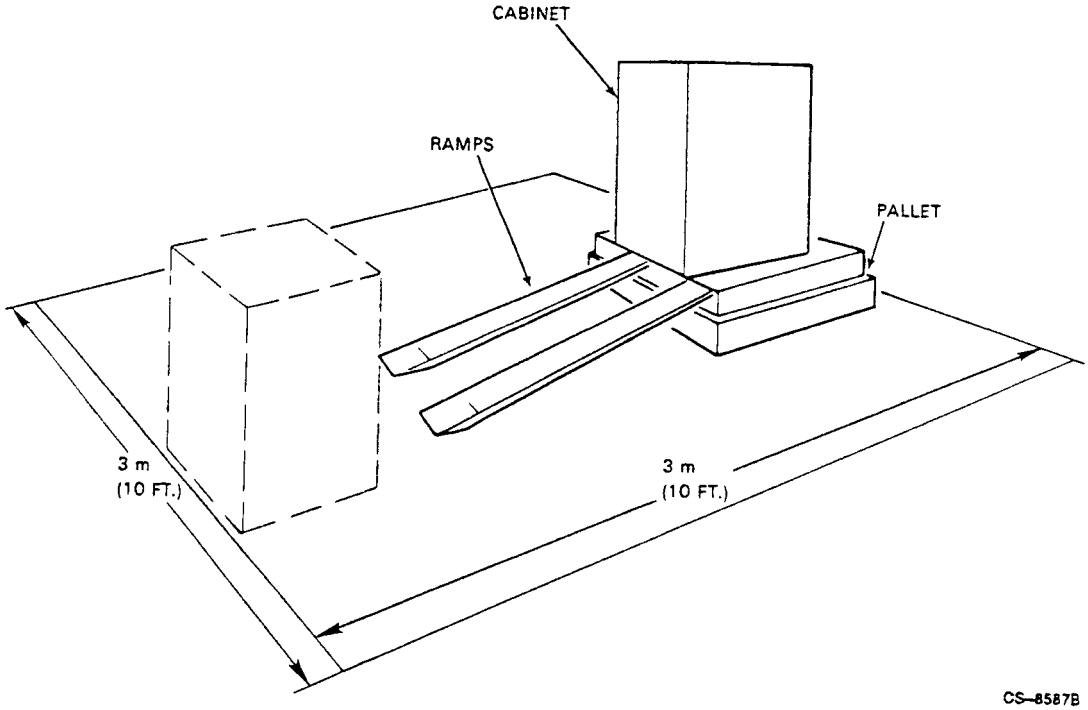

2.4.3 Removing the TSZ07-BA/BB, -EA/EB from the Carton

Use the following procedure to remove the cabinet model from the carton.

WARNING

Once the leveling feet are raised, the cabinet is free to roll on its casters. The cabinet is top heavy and must be handled with care.

1. Cut the nylon straps and remove the corrugated cardboard box (see Figure 2–7).
2. Using a 9/16-inch wrench, remove the four shipping bolts that hold the cabinet to the skid. Figure 2–9 shows the sequence in which to unpack the unit.

Figure 2–9: Unpacking Sequence

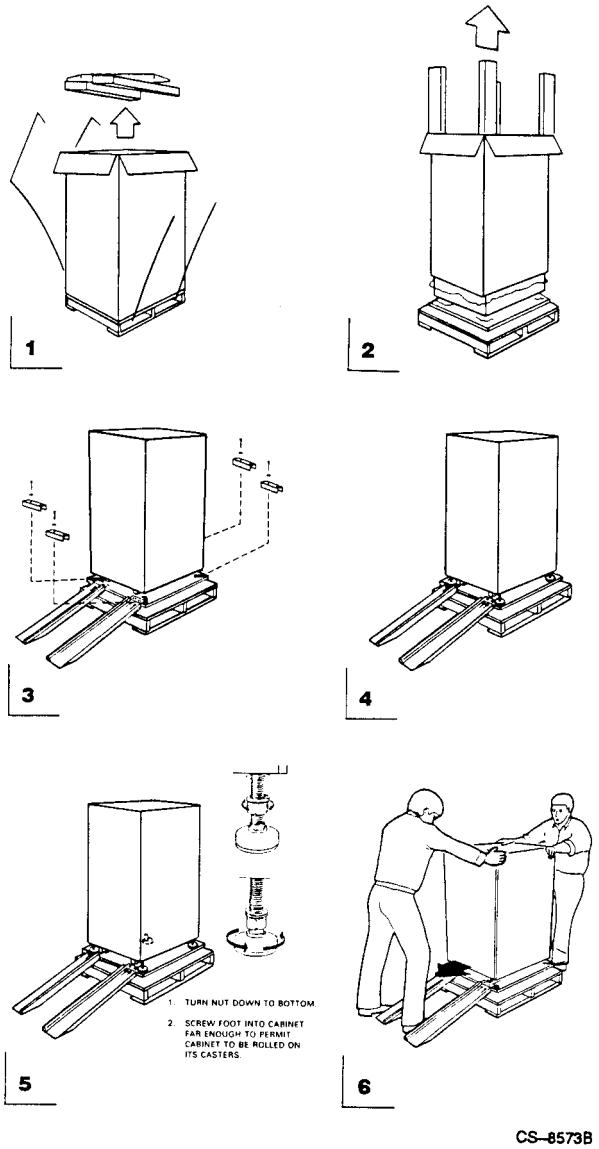

3. Remove the metal hold-down brackets.

4. Using a 11/16-inch wrench, loosen the leveling feet locking nuts (see Figure 2–10).

Figure 2–10: Raising Leveling Feet

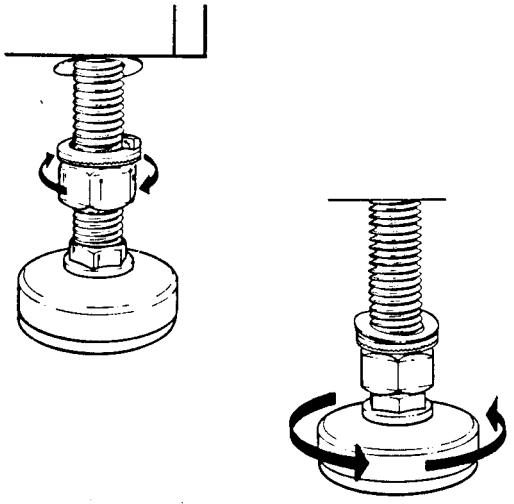

1. TURN NUT DOWN TO BOTTOM.
2. SCREW FOOT INTO CABINET FAR ENOUGH TO PERMIT CABINET TO BE ROLLED ON ITS CASTERS.

CS–2840B

5. Using a 9/16-inch wrench, screw the leveling feet up into the cabinet base all the way.

2.4.4 Removing the Cabinet from the Skid

Use the following procedure to remove the cabinet from the skid.

WARNING

Use sufficient manpower to move the cabinet off of the skid.

1. Install ramps onto the pallet deck.

2. Grasp the cabinet by the right top and left top (see Figure 2–11).

Figure 2–11: Deskidding the Cabinet

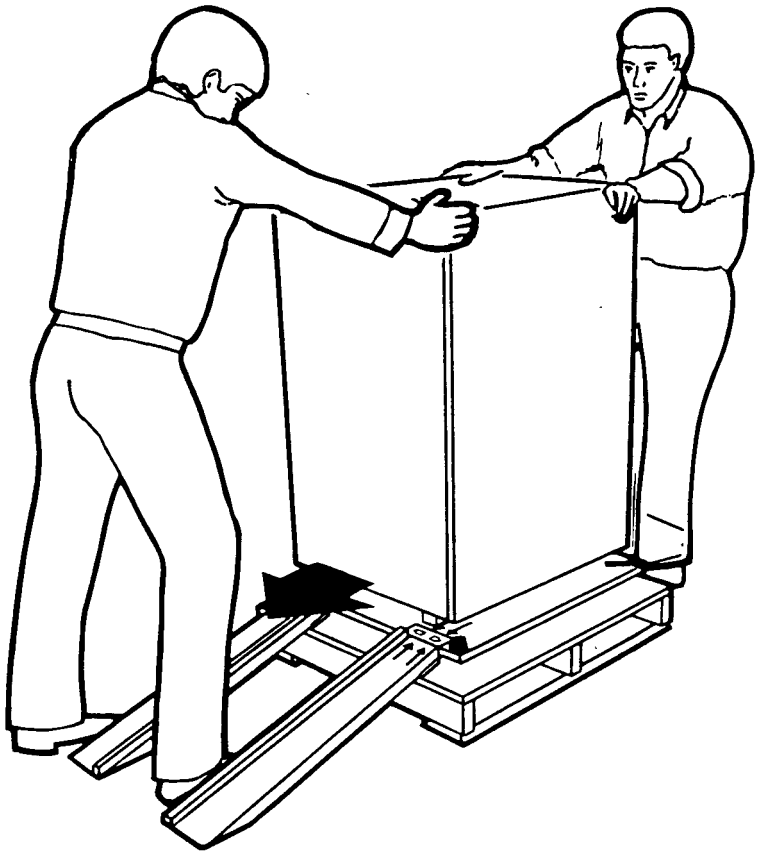

CS–8572B

3. Roll the cabinet off of the skid and down the ramps, taking care to prevent it from tipping over.
4. Open the rear door using a 5/32 inch hex key (see Figure 2–12) and verify that the accessory kit is present.

Figure 2–12: Opening Cabinet Door

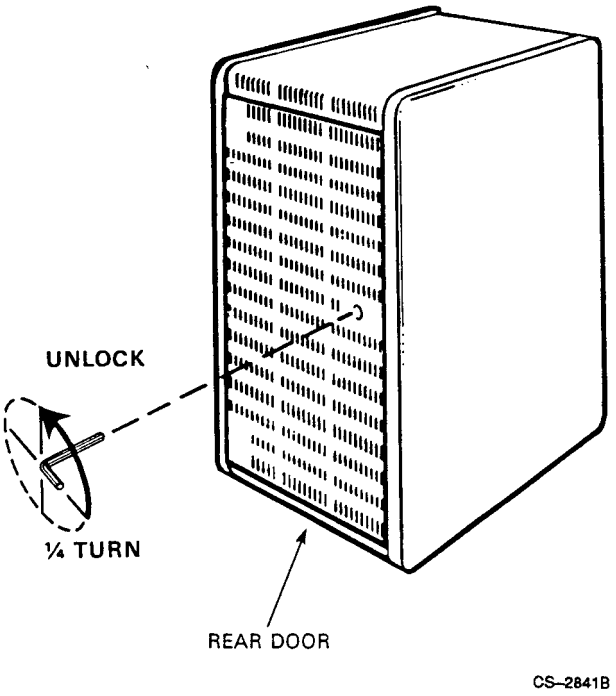

2.4.5 Installing the Cabinet Stabilizer

The cabinet model TSZ07 is shipped with a stabilizer in the top of the packing carton. **This stabilizer should be used for installations where the cabinet is free standing (not connected to other cabinets).**

To install the stabilizer on the cabinet model TSZ07 perform the following:

1. Remove the cardboard protectors from the ends of the cast stabilizer.
2. Open the bag containing the mounting parts for the stabilizer and verify that it contains the items listed in Table 2–1.

Table 2–1: Stabilizer Kit Contents

Item	Description	Quantity
1	Cast stabilizer	1
2	Coupler	2
3	Ring, external retaining	2
4	Washer, 0.518 inch ID split lock	2
5	Washer, rectangular	2
6	Screw, 1/2 x 3/4 hex	2
7	Shim	2

3. Screw the two couplers into the stabilizer until the groove at the bottom of the stabilizer is accessible. Insert a screwdriver through the 5/16 inch hole in the side of the coupler to turn the coupler (see Figure 2–13).
4. Insert the external retaining ring in the groove at the bottom of the couplers.
5. Remove the side panels from the cabinet (see Figure 2–13).
6. Remove the rear leveling feet from the cabinet.
7. Slide the stabilizer into position at the rear of the cabinet so that the holes in the couplers line up with the holes for the rear leveling feet (see Figure 2–13).

8. Place lock washer and the rectangular washer on the 1/2 x 3/4 hex screw and thread the screw into the coupler.
9. Slide the shim into place.
10. Level the cabinet by adjusting the couplers.
    - To raise the cabinet, turn the coupler counterclockwise.
    - To lower the cabinet, turn the coupler clockwise.
11. Tighten the 1/2 x 3/4 hex screw, using a 13/16 inch box wrench, to 250 inch pounds. Insert a screwdriver in the 5/16 hole in the side of coupler to hold it for tightening.
12. Reinstall the side panels on the cabinet.

Figure 2–13: Installing the Cabinet Stabilizer

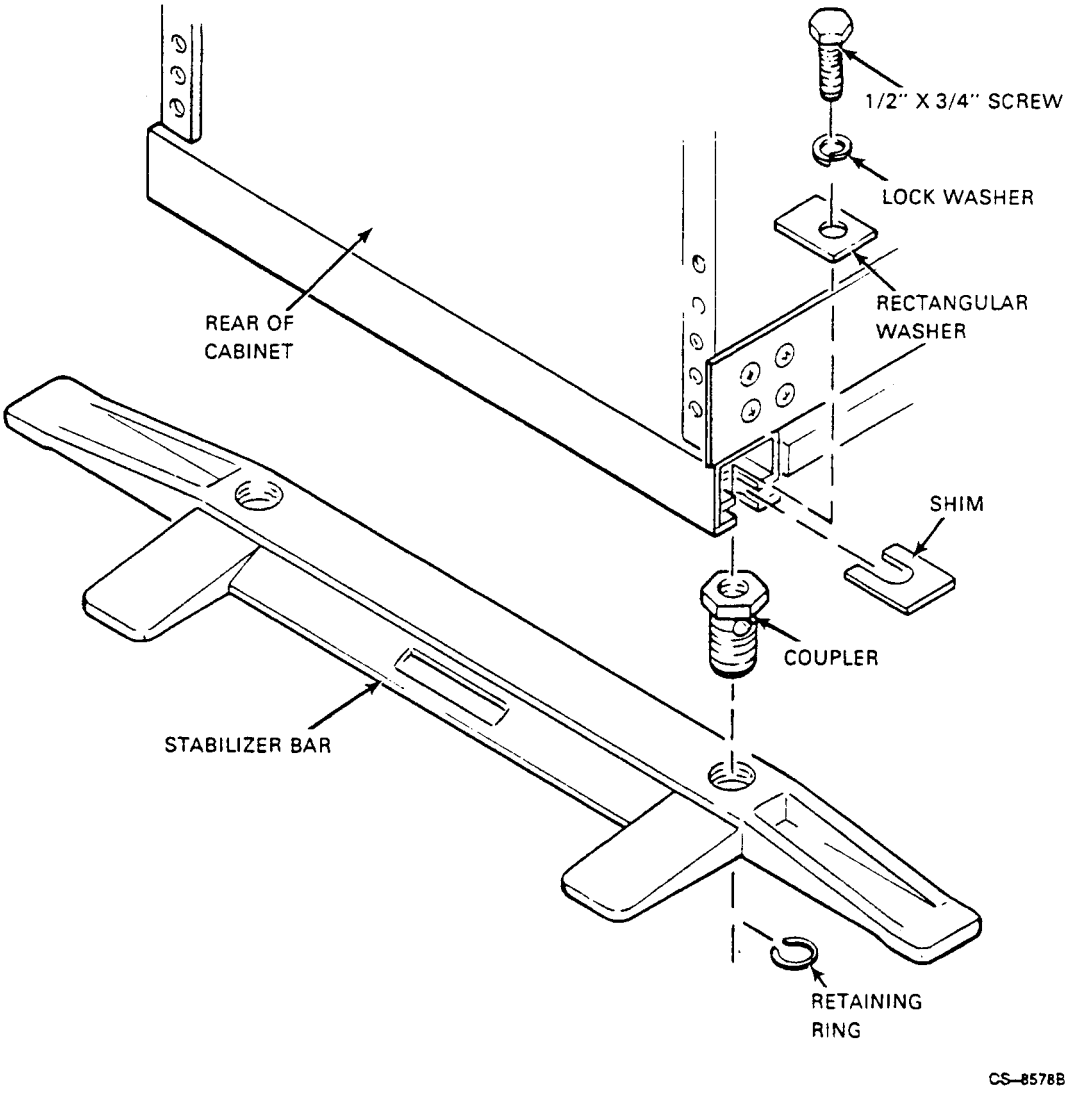

2.4.6 Remove Packing Material from the TSZ07-BA/BB, -EA/EB

When you receive the TSZ07 there is a plastic ring on the take-up hub which must be removed before operating the TSZ07. To access the tape path, perform the following:

1. Lift the lid on the cabinet until the lid latch locks it in place (see Figure 2–14).
2. Raise the top cover of the TSZ07 and place the cover retaining arm in the recess next to the tape path (see Figure 2–14).

Figure 2–14: Opening Cabinet Lid

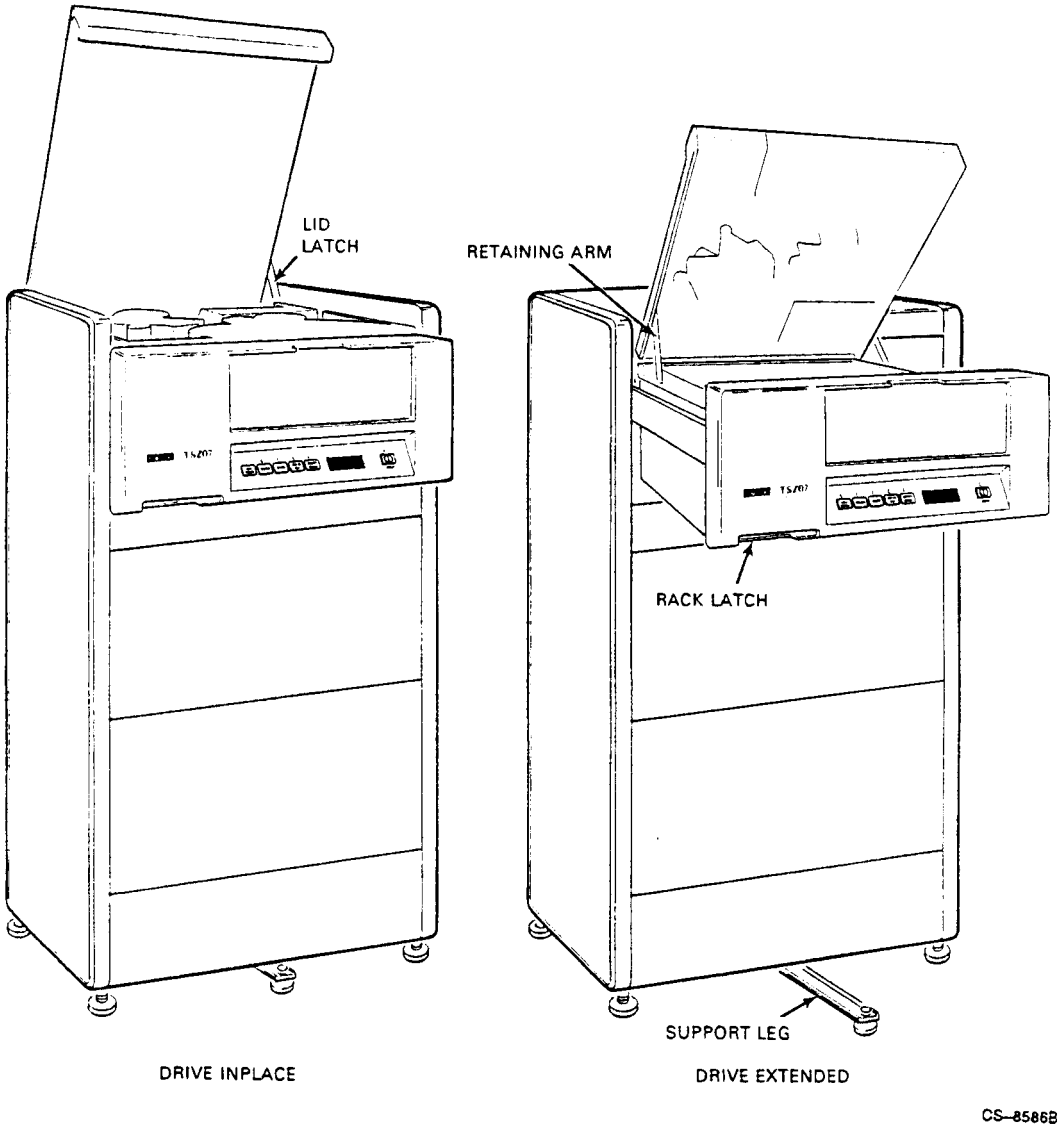

You can now remove the packing material from the take-up hub (see Figure 2–3).

To close the TSZ07 cabinet enclosure, perform the following:

1. Lift the cover retaining arm.
2. Close the top cover of the TSZ07.
3. Close the cabinet lid by releasing the latch and placing the lid in the closed position.

2.4.7 Opening the Cabinet TSZ07, Alternate Method

To pull the TSZ07 from the cabinet perform the following:

WARNING

Before you do the first step, ensure that the cabinet is stabilized by extending its support leg before pulling the drive out of the cabinet on its slides.

1. Remove the shipping bracket from the rear of the tape drive.
2. Reach underneath the left corner of the front panel through the air inlet and open the rack latch. See Figure 2–14.
3. Pull the drive out of the cabinet.
4. Raise the top cover and place the cover retaining arm in the recess next to the tape path. See Figure 2–14.

Reinstall the drive into the cabinet as follows:

1. Lift the cover retainer arm.
2. Close the top cover.
3. Press the lock in each slide inward and push the drive into the cabinet.

2.4.8 Unpacking the Small Carton

Open the accessories box and check its contents. The kit should contain the following:

- *TSZ07 Tape Drive Installation/Owner's Manual*
- *TSZ07 Tape Drive Technical Manual*
- Tape cleaning kit
- Magnetic tape (2400 feet, blank)
- SCSI data/control cable (BC06P-09)
- Country specific ac power cord
- FTZ postcard (German kit)
- Remote turn on cables (70-08288-8F and 17-02637-01)

If any item is damaged, missing, or incorrect, contact the dealer from whom the system was purchased.

2.4.9 Installing Cables on the TSZ07-BA/BB, -EA/EB

To install the cables on the cabinet model TSZ07, perform the following:

1. Use the 5/32-inch hex wrench to open the rear door (see Figure 2–12).
2. Connect the SCSI cable to match your installation requirements and the power cable (see Section 2.3.4).

2.5 Installing Rackmountable Models

Installation of the rackmountable TSZ07 requires the following:

1. Unpacking the TSZ07-AA, -DA.
2. Unpacking the accessories carton.
3. Installing the TSZ07 into the cabinet.

2.5.1 Unpacking Rackmountable Models (TSZ07-AA, -DA)

The rackmountable models are shipped in one large carton and one smaller carton. The large carton contains the TSZ07 tape transport cabinet. The smaller carton contains documentation, a cleaning kit, a SCSI cable, a power cord, and a reel of magnetic tape. A SCSI terminator is mounted on the rear of the TSZ07. Hardware for rack-mounting the tape drive is also included.

CAUTION

Single-ended and differential SCSI busses require different termination. Be sure to use the terminators marked "differential" with the differential drive (the terminators are supplied with the drive).

After unpacking the TSZ07, place the TSZ07 on a flat work surface and check the shipping documents to ensure that the correct model has been shipped. If anything is missing, damaged, or incorrect, contact the dealer from whom the equipment was ordered.

Remove any tape securing the front door (see Figure 2–1).

The TSZ07 is shipped with a plastic packing ring on the take up hub which must be removed before it can be operated. To remove the packing ring, place the TSZ07 in the tape access position, as described in the following section.

2.5.2 Removing Packing Material from the TSZ07-CA, -FA

To place the TSZ07 in the tape access position, perform the following:

1. Position the TSZ07 so that the top is free to open.
2. Raise the top cover and place the cover retaining arm in the recess next to the tape path. See Figure 2–15.

Figure 2–15: TSZ07 Cover Retaining Arm - Rackmount Model

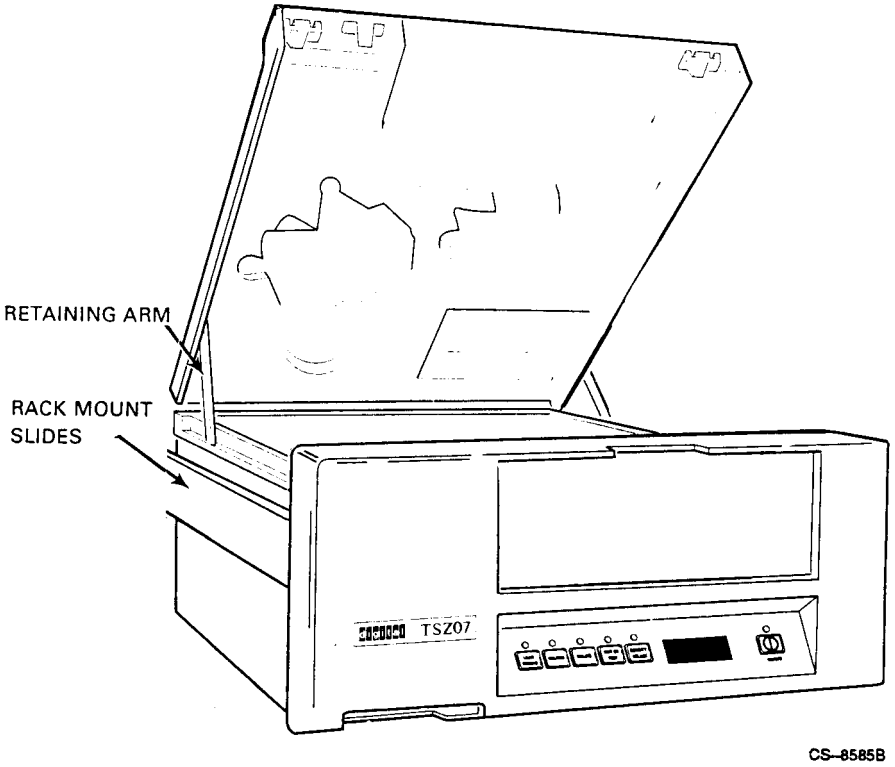

You can now remove the packing ring from the take-up hub.

To close the table top TSZ07 enclosure, perform the following:

1. Lift the cover retaining arm (see Figure 2–15).
2. Close the top cover of the TSZ07.

2.5.3 Unpacking the Accessories Carton

Open the accessories carton and remove its contents. Check that the kit contains the following:

- *TSZ07 Tape Drive Installation/Owner's Manual*
- *TSZ07 Tape Drive Technical Manual*
- Tape cleaning kit
- Magnetic tape (2400 feet, blank)
- SCSI data/control cables (BC06P-06, BC56H-06)
- Country specific ac power cord
- FTZ postcard (German kit)

2.5.4 Installing the Rackmountable Tape Drive (TSZ07-AA, -DA)

Installation of the Rackmountable Tape Drive (TSZ07-AA, -DA) consists of installing the TSZ07 in a standard 19-inch EIA rack (cabinet). After the TSZ07 is installed, the interface and power cables must be connected.

2.5.5 Installing the Slides on the Rack

To install the slides on the rack for the installation of the TSZ07 perform the following:

WARNING

Use sufficient people to lift the TSZ07.

1. Remove the TSZ07 from the shipping container and set it on a flat work surface.
2. Slide the rails to the rear of the TSZ07 until the rail locks in position (see Figure 2–16).

Figure 2–16: Rack Mounting the TSZ07

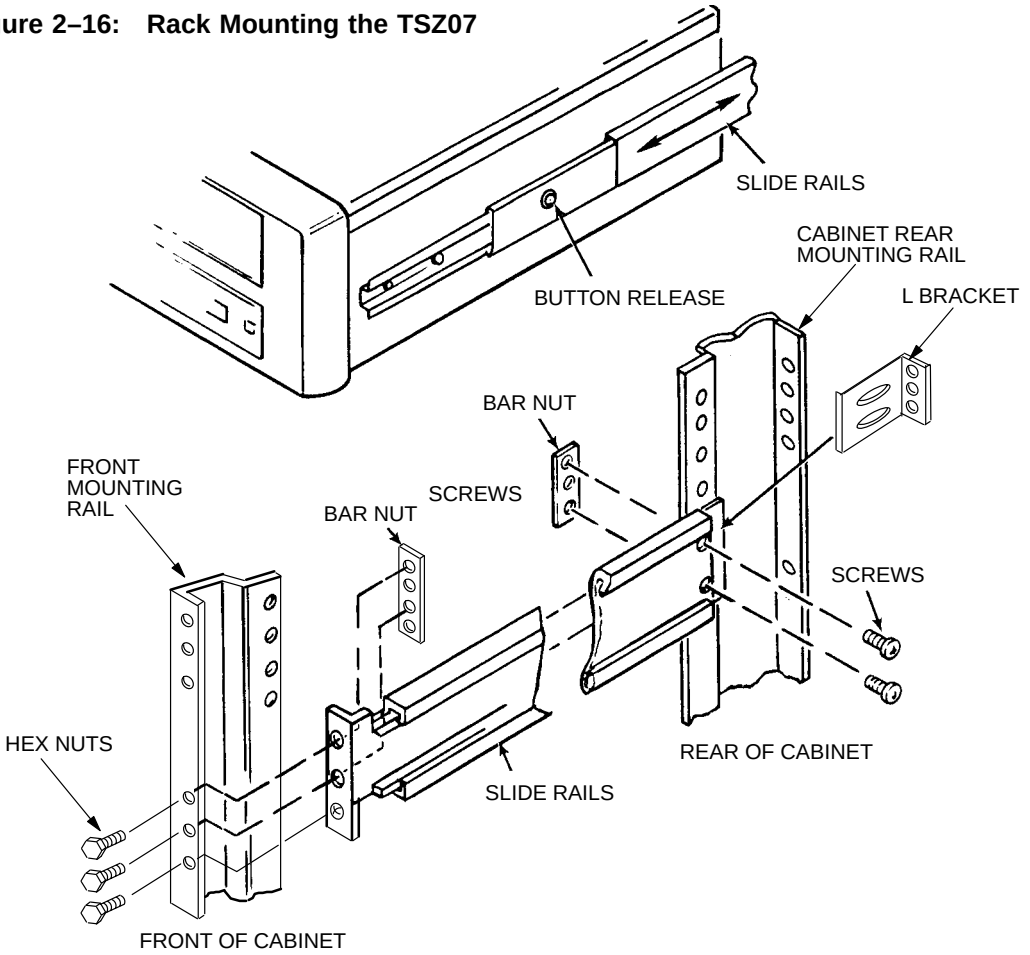

CS–9060

3. Press the button release and pull the rails free from the TSZ07.
4. Position the rails with the hole for the button release to the front of the rack (see Figure 2–16). The TSZ07 requires 8 3/4 inch of vertical space.
5. Insert 3 hex nuts at the front of the rails. Do not tighten the screws yet.

6. Place the L bracket at the rear of the rails between the cabinet mounting rail and the slide rail.
7. Install 2 screws and bar nut through the L bracket to mount the slide rails to the cabinet rear mounting rail. Do not tighten the screws yet.
8. Repeat steps 2 through 7 for the other slide rail on the TSZ07.
9. Pull the rails forward until they lock in position, fully extended.

WARNING

If there is a safety foot with this rack, be sure it is fully extended before installing the TSZ07.

10. Lift the TSZ07 and carefully position the slides in the rails and slide the TSZ07 until it locks in position.
11. Press the button lock to release the TSZ07 and then push it into the operating position - the latch catches. Tighten all screws and hex nuts now.
12. Slide the TSZ07 to the fully forward position. Make sure the unit slides smoothly. Adjust the hex nuts and screws to ensure smooth operation.
13. Install the SCSI and power cables. Be sure to provide a strain relief for the cables.
14. Push the safety foot back into position.

NOTE

This procedure may not be applicable for a non-Digital standard cabinet.

2.5.6 Installing Cables on the TSZ07-AA, -DA

To install the cables on the rackmountable TSZ07, connect the SCSI cable and the power cable using the procedures recommended for that rack and the requirements of Section 2.3.4. When the cables are installed the TSZ07 is ready for operation (see Chapter 3 for operating information).

2.6 Running Diagnostics

After installing the TSZ07, run MicroVAX Diagnostic Monitor (MDM) on all systems where the TSZ07 is connected to a KZQSA. Select the KZQSA test and run it standalone before testing the whole system. Consult the *MicroVAX Diagnostic Monitor User's Guide* for proper MDM operation. Make sure the magnetic tape that you use is blank or a scratch tape. Failure to do so may cause a loss of data.

MDM 135 is the first version that will recognize the TSZ07 as a TSZ07. The TSZ07 is not officially supported with the KZQSA MDM diagnostic released in MDM 134, however it can be tested with it. When using MDM 134, the KZQSA diagnostic will identify the TSZ07 Tape Drive as a TLZnn. This message will be followed by "Unit #x", where x is whatever unit ID number you have assigned by way of the NOVRAM to the tape drive. The default value for x is 4. Should the drive fail, it will be identified as a TLZnn. If the self-tests should fail when they are invoked by MDM 134, the Receive Diagnostic Results command will identify the tape drive as a TLZ04.

After MDM has run successfully, boot the system and run the appropriate diagnostics as described below.

2.6.1 VMS Systems

Log into the SYSTEST account. Make sure the UETINIT.DAT file is set for the device number the tape drive is set for. If it is not, edit the file and change the number. Initialize the tape drive UETP. Run UETTAPE00. The tape drive should run through one pass without errors.

On SCSI systems, UETP should be run before using the tape drive. Consult the appropriate VMS Installation Manual for more detailed instructions on running UETP.

2.6.2 ULTRIX Systems

To verify the operation of the tape drive on ULTRIX systems, use either the "tapex" or the "mtx" diagnostics. For detailed descriptions on how to run these diagnostics, refer to your ULTRIX manual.

2.6.3 Onboard Diagnostics

The TSZ07 Tape Drive has high level onboard diagnostics. These diagnostics are activated through the front panel keys and the output is displayed on the alphanumeric display. The *TSZ07 Tape Drive Technical Manual* and *TSZ07 Tape Drive Pocket Service Guide* explain the use of these diagnostics.

Chapter 3

Operation

3.1 Introduction

This chapter provides information on the operation of the TSZ07 as follows:

- A description of the controls and indicators and how to use them.
- A description of how to set the Unit Address.
- A description of how to select the tape density.
- A list of the activity messages.
- A description of how to load and unload tapes automatically.
- A description of how to load and unload tapes manually.
- A list of the error messages.

3.2 Controls and Indicators

Except for the ac power switch which is located on the rear of the TSZ07, the controls and indicators are located on the front panel (see Figure 3–1). There are two modes of operation—normal and service aid. See the *TSZ07 Tape Drive Technical Manual* for a description of operation using the service aid mode.

Figure 3–1: Front Panel

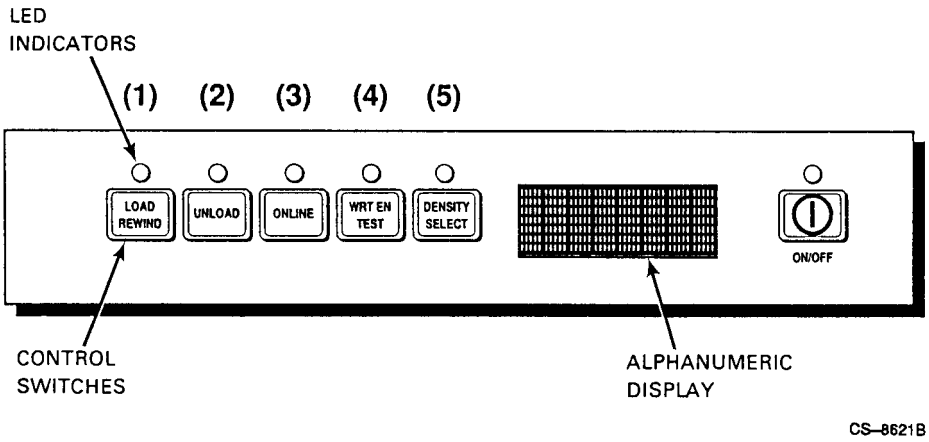

3.2.1 AC Power Switch

A power switch located on the rear panel controls ac power to the drive. The switch is labeled with a **1** to indicate on and a **0** for off. When this switch is on, ac power is connected to the power supply in the tape drive. This switch must be on for the drive to operate. When this switch is first set to 1, the TSZ07 goes through a self test as follows:

CAUTION

An abnormal interruption to system operation can occur if the ac power switch is set to off (0) while the host system is running. Always shut down the host system before turning off the tape drive.

1. The five LED indicators over the control switches flash and the alphanumeric readout displays TESTING.
2. The alphanumeric readout changes to TESTPASS and the LED indicators continue to flash.
3. The LED indicators go out.
4. The alphanumeric display goes blank and the Unload indicator lights.

The TSZ07 is now ready for use (loading tapes).

3.2.2 DC Power Switch

CAUTION

An abnormal interruption to system operation can occur if the ac power switch is set to off (0) while the host system is running. Always shut down the host system before turning off the tape drive.

The power switch on the front panel controls dc power from the power supply. Under the switch is the label **ON/OFF**; the switch itself is labeled (|). Pressing the switch once connects dc power throughout the drive and lights the indicator above the switch–if the ac power switch is on. Pressing the switch again disconnects dc power and turns off the indicator. This switch must be on (the indicator must be lit) for the drive to operate. When this switch is set to ON, the TSZ07 goes through a self test as follows:

1. The five LED indicators over the control switches flash and the alphanumeric readout displays TESTING.
2. The alphanumeric readout changes to TESTPASS and the LED indicators continue to flash.
3. The LED indicators go out.
4. The alphanumeric display goes blank and the Unload indicator lights.

The TSZ07 is now ready for use (loading tapes).

3.2.3 Alphanumeric Display

An eight-character alphanumeric display provides messages indicating:

- Basic machine status
- Tape density
- Error conditions

3.2.4 LOAD/REWIND (1) Switch

When the TSZ07 is off-line, pressing the LOAD/REWIND (1) switch causes the drive to load a tape and position it at BOT, or, when a tape is already loaded, to rewind it to BOT. The Load/Rewind indicator flashes during tape loading and the message LOADING appears on the alphanumeric display. Once the load is completed, the tape density is displayed. The density messages are ID 1600, ID 6250, and BLANK. If the loaded tape is written in an invalid format, the message ID UNKWN is displayed.

The density message can be displayed for five seconds by pressing the LOAD/REWIND (1) switch anytime the drive is off-line and the tape is at BOT. The LOAD/REWIND (1) switch functions only when the drive is off-line.

3.2.5 UNLOAD (2) Switch

The UNLOAD (2) switch causes the drive to unload tape from any point. While the tape is unloading, the Unload indicator flashes and the message UNLOAD'G appears on the alphanumeric display. When unloading is completed, the Unload indicator lights and the message UNLOADED appears on the alphanumeric display for a short time.

Before the tape can be unloaded, the drive must be placed in the off-line mode. When this is done (by pressing the ONLINE (3) switch), all cache-resident data is written to tape before the drive actually goes off-line.

The UNLOAD (2) switch may be pressed while the drive is loading a tape. The loading process is halted, the message LD ABORT is displayed, and the tape is unloaded.

3.2.6 ONLINE (3) Switch

With a tape loaded, the ONLINE (3) switch places the drive on-line and causes the indicator above the switch to light. If the drive is already on-line, this switch takes it off-line and turns off the indicator.

3.2.7 WRT EN/TEST (4) Switch

When the TSZ07 is on-line, the Write-Enable indicator displays the write status of a loaded tape reel. When a tape reel with a write-enable ring is loaded, the Write-Enable indicator lights.

The TEST (4) switch provides access to the TSZ07 service aids and should only be used by trained service personnel, or to change the configuration parameters.

3.2.8 DENSITY SELECT (5) Switch

The DENSITY SELECT (5) switch selects the operating density that tapes are to be written in. DENSITY SELECT (5) functions only when the drive is off-line and a tape is loaded at BOT, or when no tape is loaded.

Pressing the DENSITY SELECT (5) switch causes the drive to select the next available density as the operating density and to present that commanded density on the alphanumeric display. For example, if the drive powers-up with a default density of 1600, and the DENSITY SELECT (5) switch is pressed, the drive switches to the 6250 density and the message CMD 6250 appears on the alphanumeric display.

Using the DENSITY SELECT (5) switch to select an operating density (commanded density) different from the one selected by the drive as a result of reading an identification burst (found density) does not necessarily cause the drive to begin immediately using the newly commanded density. The identification burst on the tape always determines the operating density–unless the condition described in Section 3.4.3 is met.

3.3 Unit Address

The TSZ07 is shipped from the factory with a default Unit Address of 4. To change the Unit Address perform the following:

1. Switch on the power switches.
2. If the On-line indicator is on, press the ONLINE (3) switch so the indicator goes off.

3. Press the WRT EN/TEST (4) switch.
4. Press the DENSITY SELECT (5) switch.
5. Press the LOAD/REWIND (1) switch.
6. Press the WRT EN/TEST (4) switch.
7. Press the UNLOAD (2) switch.
8. Press the DENSITY SELECT (5) switch.
   The alphanumeric display (see Figure 3-1) now displays the message UNIT (Unit Address)
9. Press the ONLINE (3) switch to enter the Change Mode.
   The SCSI value (4) will appear in the display.
10. While holding the ONLINE (3) switch, press the LOAD/REWIND (1) switch to increment the value, or press the UNLOAD (2) switch to decrement the value.
11. Press and hold the DENSITY SELECT (5) switch and then press the WRT EN TEST (4) switch to save the new setting in non-volatile memory and exit the service aid. The message SAVING appears on the display.

3.4 Density Selection

The density at which the drive is reading or writing is termed the operating density. When the drive is active, the operating density is shown on the alphanumeric display. The operating density is set in one of four ways:

- At power-up by the drive
- When commanded by the system through the interface
- Automatically when the TSZ07 reads the identification burst from a recorded tape
- When commanded by a user at the front panel

3.4.1 Power-Up Density Selection

At power-up the TSZ07 reads its non-volatile memory (NOVRAM) to determine the default density and sets this as the operating density. The default density is a configuration option that can be changed by qualified service personnel.

3.4.2 Host Density Selection

Selecting the operating density through the interface is a function of the host system software and the interface itself.

3.4.3 Automatic Density Selection

The TSZ07 automatically selects the operating density when it reads an identification burst from a tape. When a load is completed with the TSZ07 off-line, or after a rewind with the TSZ07 off-line, the alphanumeric display shows the density the TSZ07 has just selected (found density) with a message, either ID 6250 or ID 1600, for approximately five seconds. If the TSZ07 does not detect an allowable density, it displays either the message BLANK or the message ID UNKWN. The BLANK message indicates that the tape is blank. The ID UNKWN message indicates that the tape was written in a format that the TSZ07 cannot read.

The TSZ07 can prevent writing in a density commanded by an operator or the host under one condition. If a read from BOT is followed immediately by a WRITE command in a different density, the TSZ07 will only write in the density determined by the identification burst found on the tape (found density); in other words, the TSZ07 ignores the command to append data in a different density. However, if a rewind precedes the WRITE command, or if a WRITE is the first tape motion command after a tape is loaded, the commanded density becomes the operating density and the TSZ07 ignores the found density. This ensures that an operator or the system cannot write a mixed density tape.

3.4.4 User Density Selection

You can select the operating density at the front panel. See Section 3.2.8.

3.5 Activity Messages

The TSZ07 uses the alphanumeric display to provide messages to the user. Table 3-1 lists the messages normally displayed during operation. Other messages may be displayed under other circumstances, such as error messages (see Table 3-2).

Table 3–1: Activity Message

Operation	Messages
Density read	ID (density)
Density selected	CMD (density)
Erase fixed	ERA(density)
Erase security	ERAS (density)
Erase variable	ERAV (density)
Load	LOADING
Read forward	RDF (density)
Read reverse	RDR (density)
Rewind	REWIND'G
Unloading	UNLOAD'G
Unload finished	UNLOADED
Write block	WRT (density)
Write file mark	WFMK (density)

3.6 Automatic Tape Loading

A label inside the front door of the TSZ07 briefly explains the automatic tape loading procedure. The following procedure explains in more detail how to load tape automatically.

CAUTION

Lifting the top cover whenever the tape drive is powered on stops tape motion and prevents tape loading or unloading.

1. If you are using a new reel of tape, or the leader of the tape is damaged, crimp the end of the tape. A tape crimping tool is available from Digital (see Appendix A).
2. Open the front door (see Figure 2–1) by gently pressing down on the center of the door.

3. Make sure the tape is completely wound onto the reel, and, if you intend to write data to the tape, that a write-enable ring is installed on the reel. Be sure the write-enable ring is fully seated. See Figure 3–2.

Figure 3–2: Write Enable Ring

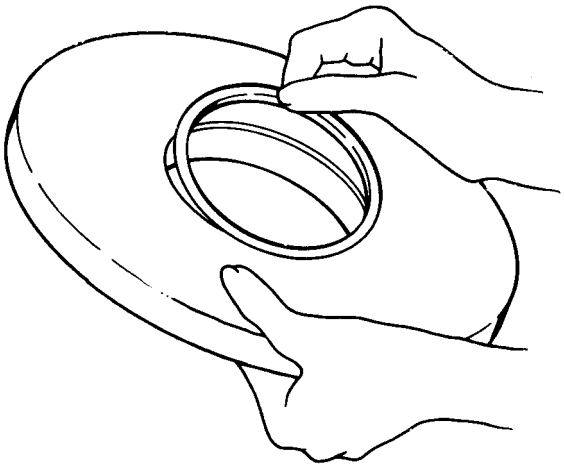

CS–8359B

4. Place the tape reel on the supply hub with the write-enable ring side of the reel down. The reel must lie evenly on the supply hub, as shown in Figure 3–3.

Figure 3–3: Inserting the Tape Reel

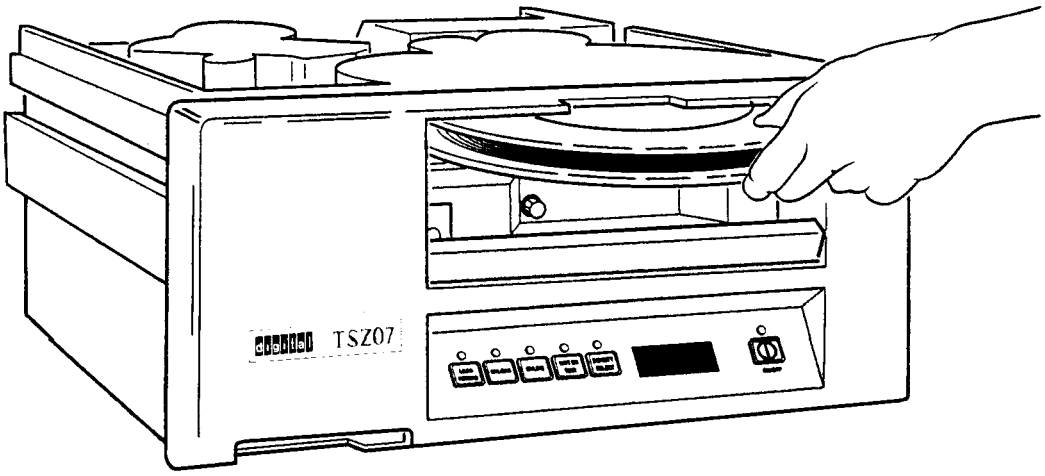

CS–8370B

5. Close the front door.
6. Press the LOAD/REWIND switch. While loading, the Load/Rewind indicator flashes and the message LOADING appears on the alphanumeric display. When loading finishes, the density message for the tape appears. The Write-Enable indicator also lights if a write-enable ring is installed.
7. Press the ONLINE switch. If the On-line indicator lights, the TSZ07 is on-line and ready for commands.

If the TSZ07 cannot autoload a tape, it may be necessary to load it manually. Refer to Section 3.6.1.

3.6.1 Manual Tape Loading

Use the following procedure to load tape manually. You may need to use this procedure with six-inch tape reels.

CAUTION

Lifting the top cover whenever the tape drive is powered on stops tape motion and prevents tape loading or unloading.

1. Place the drive in the tape access position (see the appropriate section in Chapter 2 for your tape drive model).
2. Make sure the tape is completely wound onto the reel, and, if you intend to write data to the tape, that a write-enable ring is installed on the reel. See Figure 3–2.
3. Place the tape reel on the supply hub with the write-enable ring side of the reel down. The reel must lie evenly on the supply hub.
4. While pressing the manual release switch, rotate the supply hub clockwise until the hub locks. The hub has three pawls that raise and hold the tape reel in place. Figure 3–4 shows the manual release switch.

Figure 3–4: Location of the Manual Release Switch

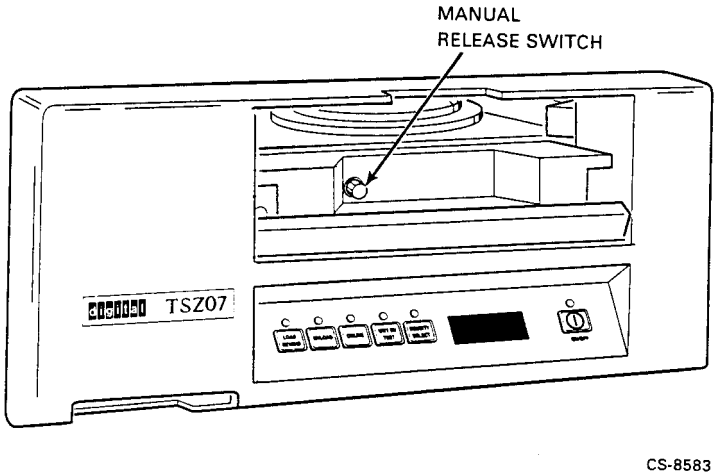

5. Thread the tape along the tape path shown in Figure 3–5.
6. Move the packer arm away from the take-up hub, wrap the tape clockwise around the take-up hub until the end of the tape is held by the next layer, then turn the hub clockwise at least five complete turns. Gently place the packer arm against the take-up hub.
7. Check that the tape is seated correctly in the tape guides and against the read/write head.
8. Close the front door and top cover.

Figure 3–5: Tape Path

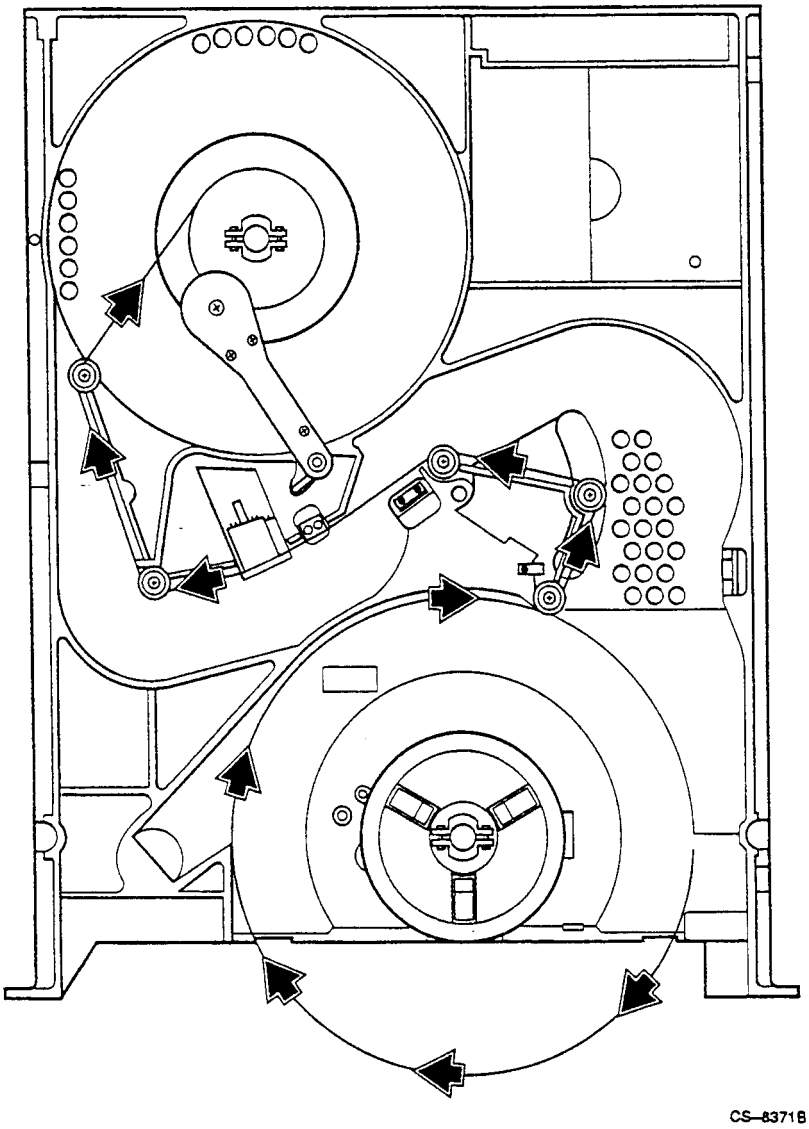

9. Press the LOAD/REWIND switch. While loading, the Load/Rewind indicator flashes and the message LOADING appears on the alphanumeric display. The Write-Enable indicator also lights if a write-enable ring is installed. When loading finishes, the tape's density message appears if it has data recorded on it.

   If the manual load was successful, the LOAD/REWIND indicator flashes and a message appears in the alphanumeric display.

10. Return the drive to the normal operating position.

3.6.2 Loading High-Static Tape

Use the following procedure to load tapes that cannot be autoloaded due to static cling. The message MAN PEEL is displayed when high-static tapes cannot be loaded. (Pressing the UNLOAD switch causes the message TAPE STUCK to appear. Pressing the UNLOAD switch a second time clears the message.)

1. Open the front door (see Figure 2–1) by gently pressing down on the center of the door.
2. Rotate the tape reel counterclockwise until the end of the tape leader can be seen.
3. Pull the end of the tape away from the reel and place it in the air stream inside the right side of the front panel opening.
4. When the end of the tape is drawn into the air stream, close the front door and press the LOAD switch. The tape should now autoload.

If after several attempts the tape cannot be autoloaded using this procedure, try the Manual Load procedure.

3.7 Unloading Tape Automatically

Use the following procedure to unload tape automatically.

1. Check that the On-line indicator is off (if not, press the ONLINE switch) and that the front door is closed. If the ONLINE switch is pressed, buffered commands are synchronized. Synchronization is a process that writes all data from the buffer to tape before executing the next command.

CAUTION

Lifting the top cover whenever the tape drive is powered on stops tape motion and prevents tape loading or unloading, and could result in the loss of data.

2. Press the UNLOAD switch. While unloading, the Unload indicator flashes and the message UNLOAD'G appears on the alphanumeric display.
3. Open the front door when the Unload indicator stops flashing and stays lit continuously and the message UNLOADED appears on the alphanumeric display (the message appears for several seconds).
4. Remove the tape reel.

If the TSZ07 does not automatically unload a tape, it may be necessary to manually unload it. Refer to Manual Unload in the following section.

3.7.1 Manual Unload of Tape

Use the following procedure to manually unload the tape from the TSZ07.

CAUTION

Lifting the top cover whenever the TSZ07 is powered on stops tape motion and prevents tape loading or unloading, and could result in the loss of data.

Use the following procedures to unload tape manually:

1. Place the drive in the tape access position (see the appropriate section in Chapter 2 for your tape drive model).
2. Rotate the supply reel counterclockwise to wind the tape onto the reel.
3. When all the tape is on the supply reel, press the manual release switch (see Figure 3-4) while simultaneously rotating the supply hub counterclockwise until the hub unlocks.
4. Remove the tape reel.

3.8 Tape Drive Errors

The TSZ07 detects errors and identifies them with messages at the alphanumeric display. Table 3-2 provides a list of the error messages that a user may respond to. If an unlisted message is displayed, contact a service representative; be sure to write down the Fault Symptom Code (a two-digit hexadecimal number) that appears after the message.

Table 3–2: Error Messages

Messages	Problem/Action Required
Door ajar	Close the front door.
End of media	Tape is full; another is required.
Hub seat	Verify that the tape reel is seated on supply hub.
ID unknown	Tape format cannot be read.
Interface error	Switch off power, then switch on; try operation again.
Load error	Check tape leader; try loading again.
Machine error	Switch off power, then switch on; try operation again.
Manual peel	Re-crimp leader and retry using the "Loading High-Static Tapes" section.
Motor fault	Switch off power, then switch on; try operation again.
No BOT	Check BOT marker on tape.
No door lock	Close front door.
Not enough tape on take-up	Reload; may require manual load.
Read error	Switch off power, then switch on; try operation again.
Read only tape	Write-enable ring needed to write.
Reel upside-down	Write-enable ring side of reel must be down.
Trap	Switch off power, then switch on; try operation again.
Write error	Switch off power, then switch on; try operation again.
Write retry exceeded	Bad tape; try another tape.

Chapter 4

Preventive Maintenance

4.1 Introduction

This chapter explains how to perform all required preventive maintenance to the tape drive.

CAUTION

It is not necessary to turn off ac power to perform preventive maintenance. However, if the ac power needs to be turned off on the tape drive, the system must be shut down first to prevent an abnormal interruption to system operation.

4.2 Maintenance

Maintenance of the TSZ07 is limited to regular cleaning of the tape path, the sensors, and the air filter.

4.2.1 Cleaning The Tape Path

The head of the TSZ07 should be cleaned every eight hours; the rest of the tape path should be cleaned every 40 hours. Freon TF is the only acceptable cleaning agent for the tape path. A cleaning kit is supplied with the TSZ07. Additional kits, P/N 22-00012-00 (TUC01-00) are available from DIGITAL.

Apply Freon TF to a lintless swab, then clean all the parts of the tape path, except the sensors, identified in Figure 4-1. Use a dry, clean, lintless swab to gently clean the sensors.

CAUTION

Do not apply cleaner directly to the item to be cleaned, even if the instructions on the cleaner state to do so. Always apply the cleaner to a swab or wipe first. Cleaning agents can dissolve the lubricants in precision bearings.

4.2.2 Sensors

The EOT, BOT, and Tape-In-Path Sensors should be cleaned every 40 hours. The sensors should be cleaned by gently wiping the face of the LED transmitter and receiver with a lintless swab. No cleaning solution is required.

The location of the sensors is shown in Figure 4–1.

Figure 4–1: Tape Path and Sensors

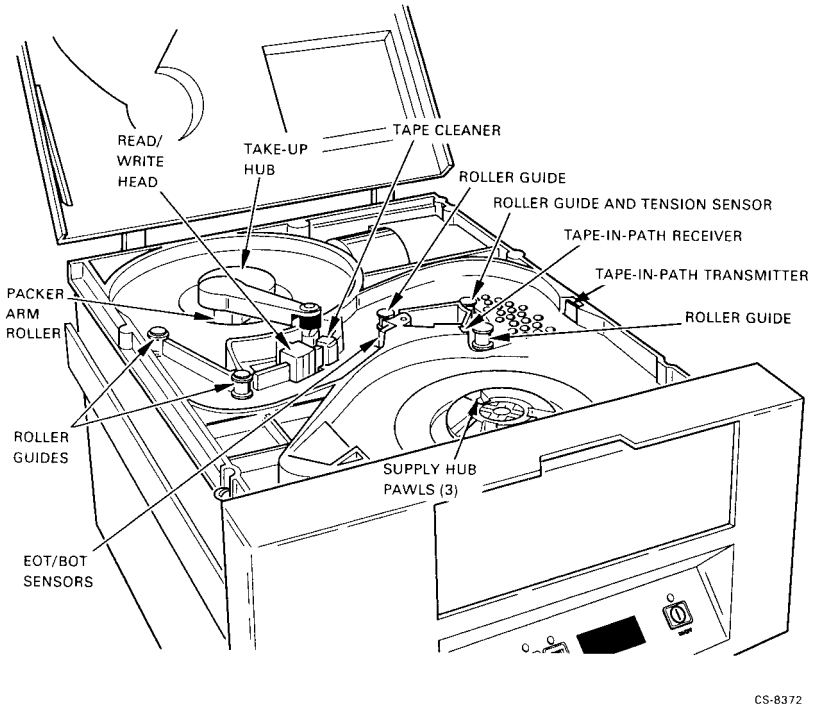

4.2.3 Air Filter

The air filter should be cleaned every six months. Remove the filter from the access hole in the front of the TSZ07 and clean it by blowing compressed air or vacuuming in the opposite direction of the airflow. The location of the air filter is shown in Figure 4–2.

CAUTION

To make sure that the air filter is properly positioned, replace the filter from the front of the drive. Otherwise the air filter will not seal against the air duct and unfiltered air will enter the TSZ07 tape path.

Figure 4–2: Air Filter

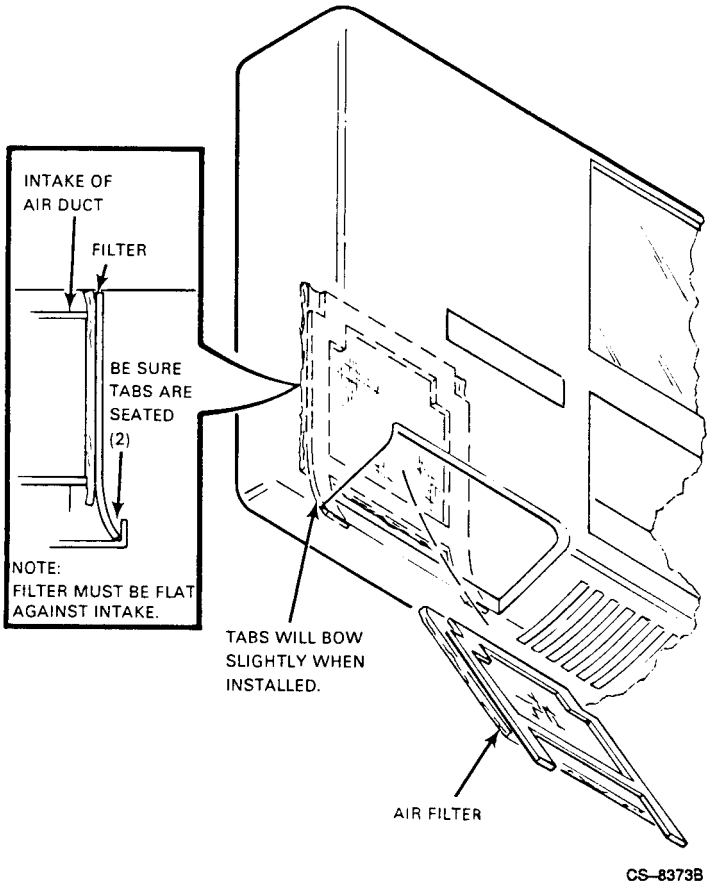

Appendix A

Accessories

A number of accessories are available for the TSZ07 Tape Drive, as listed in Table A-1.

Table A–1: Accessories

Name	Order Number
Crimping Tool	47-00038
Cleaning Kit	22-00012-00 (TUC01-00)
7-inch Reels	30-18709-08 (TUN24-5, TUN24-5L)
SCSI Cable	BC09D-06
SCSI Cable	BC06P-06, 09, 2F, 02
SCSI Cable	BC56H-03, 06
SCSI Cable, differential	BC13N-25
SCSI Terminator, single ended	12-30552-01
SCSI Terminator, differential	29-29713-01