1600 SERIES TRAINING NOTES

OVERALL THEORY OF OPERATION

The Eagle 1600 Series Systems are built around a single system processor board to make system troubleshooting and repair as easy as possible. The system processor board contains the Intel 8086-2 microprocessor and its associated circuits. It also contains the EPROMs, the dynamic RAM and connectors for the interface boards. The system processor board, along with the interface boards, the Xebec controller, the disk drives, power supply and fan, are contained in the Main System Enclosure. There are two other modules, the video monitor and the keyboard. These are completely separate and should a problem arise in one of the modules they are simply removed and replaced.

The following paragraphs are intended to give a brief outline of the components shown in the basic block diagram (Figure 1). A more detailed description can be obtained in "Circuit Board Description" on page 5 and in Section 4: Maintenance.

The basic block diagram shows a standard model Eagle 1630. What will change in other models, and with options added, are the disk configurations, the interface boards and the available RAM.

SYSTEM PROCESSOR BOARD

Referring to Figure 1, the Intel 8086-2 microprocessor is operating at 8Mhz and provides for 16-bit data and 20-bit addressing (accesses up to 1 Mbyte of memory). An 8087 can be added, as an option, to function as a co-processor. The bus controller chip, an 8288, and its associated transceiver circuits are shown controlling the I/O read/write operations between the 16-bit data buses and the 8-bit data bus. The two EPROMs are 2732As (4096 x 8) and are arranged, Odd/High byte and Even/Low byte. The EPROMs are preprogrammed with the bootstrap program and initial system diagnostics. These diagnostics can be intialized by pressing down the "T" key and pushing the RESET button. The physical RAM area consists of 4 rows of 16, 8-Kbyte, dynamic RAMs.

The standard RAM area is 1 row of 16, 64 x 1, for a total of 128 Kbytes. The optional memory expansion kit consists of an additional 48 dynamic RAMs and another refresh controller, for a total of 512 Kbytes of internal memory. Eagle will not support any other RAM configurations.

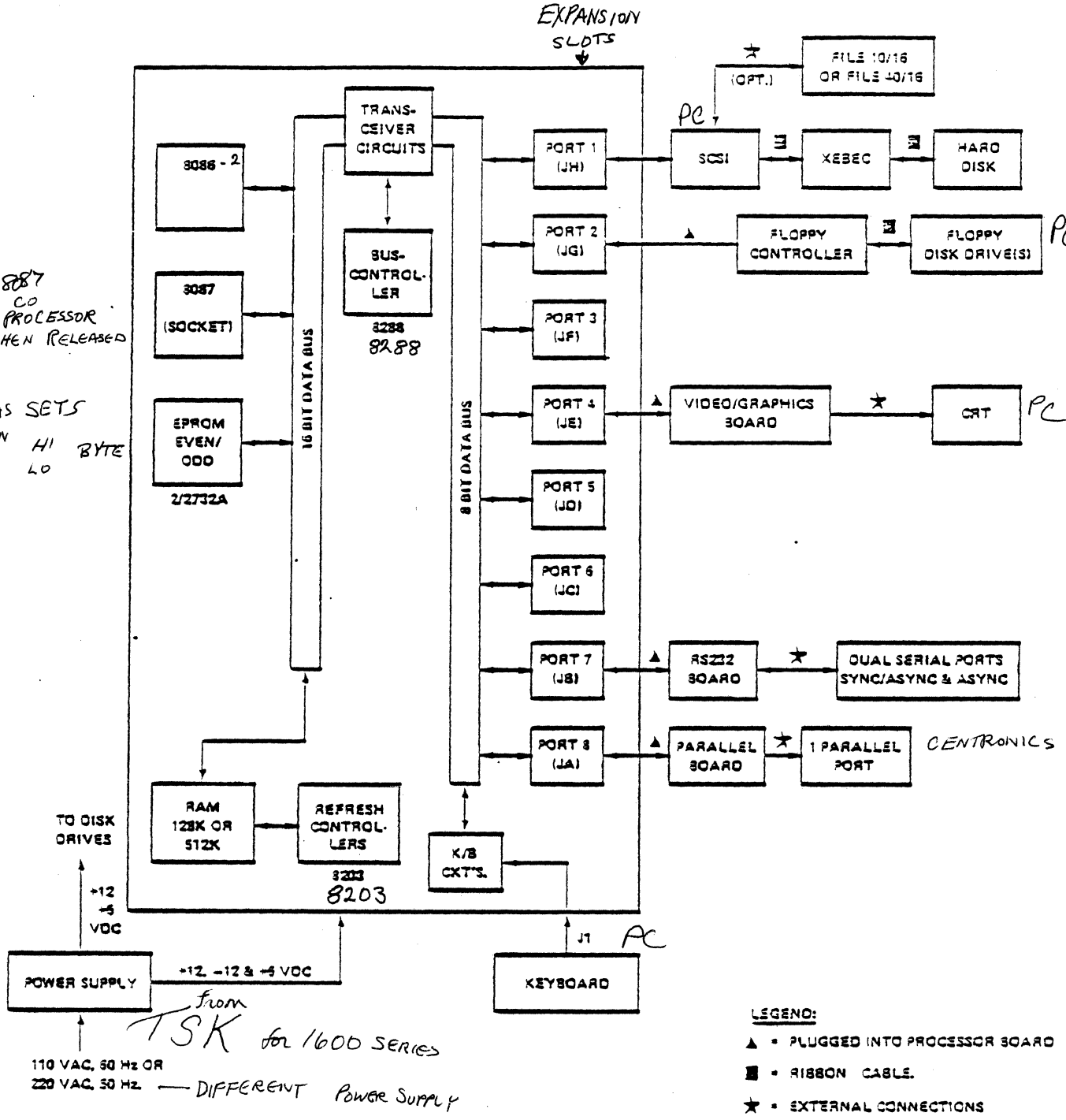

NOTE: The keyboard circuits consists primarily of an 8-bit serial/parallel shift register which interfaces the serial scan codes to the system. The keyboard itself contains its own microprocessor, a 8048.

FIGURE 1: 1600 SERIES BASIC BLOCK DIAGRAM

INTERFACE BOARDS

Refering to Figure 1, the port numbers are described in the order they are arranged in the CPU panel at the right-hand side of the main enclosure. Port 1 is in the front, with Port 8 at the back. The letter designations are the connections on the system processor board.

Port-1	The SASI (SCSI) board which has an external connection for a hard disk drive add-on and an internal connector to the Xebec controller. This board provides additional buffering between the system and the hard disk drives.
Port-2	The floppy disk controller board, internal to the system. It provides all the control signals for the floppy disk drive(s).
Port-3	For future expansion.
Port-4	The video/graphics controller board. The video portion is designed around the Motorola 6845 CRT controller. The video display is 80 characters per line by 25 lines. Each character is 9 x 14 pixels. In the optional graphics mode, the display is 720 x 352 pixels.
Port-5 and Port-6	For future expansion.
Port-7	The RS232 board. It has two serial ports. One is both asynchronous and synchronous and the other is only asynchronous.
Port-8	A single parallel port which is Centronics compatible.

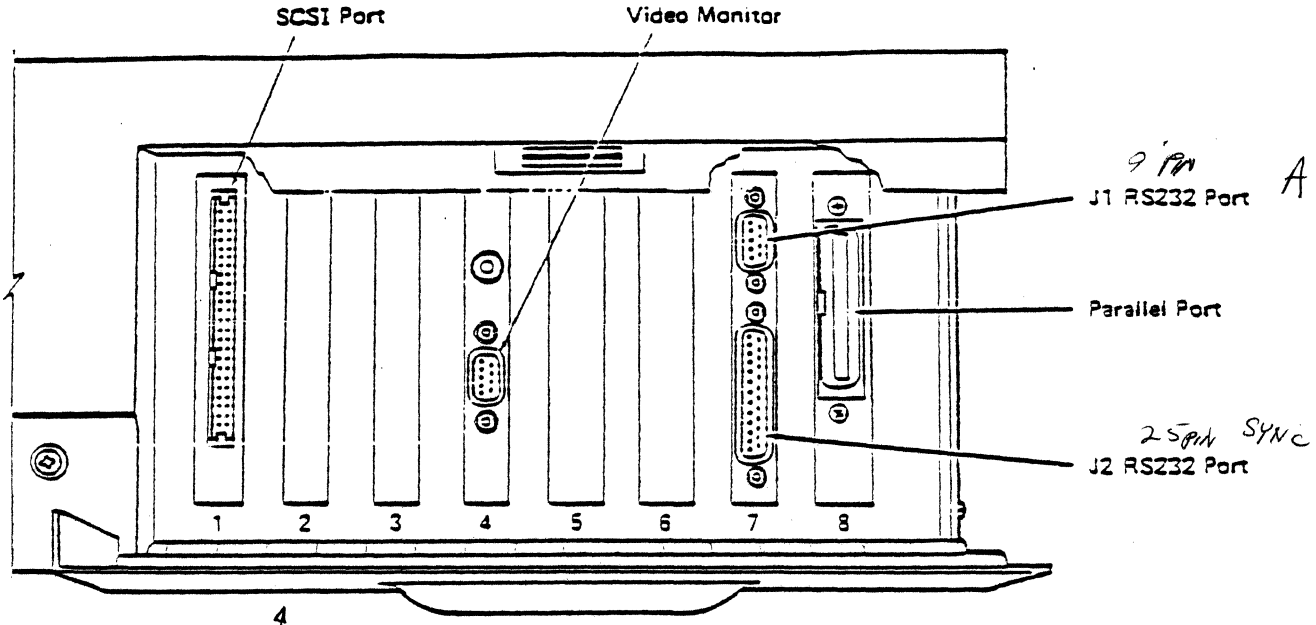

FIGURE 3: ENCLOSURE PORT PANEL

DISK DRIVES

The Eagle 1600 series uses 5 1/4" floppy disk drives, which format the diskette into 80 tracks, 5 sectors per track. The Eagle 1600 series uses 96 TPI floppy disks. The floppy disk drives are double-sided and double density.

The Eagle 1630 uses a 12.5 M byte hard disk, 10 M bytes formatted. The disk drive has two 5 1/4" disks and four read/write heads. There are a total of 1224 tracks, 32 sectors per track, and a track density of 345 TPI.

VIDEO MONITOR

The video monitor is a separate module with its own power supply. The screen is 12 inches and uses P39 green phosphor.

POWER SUPPLY

The power supply is a switching type power supply which supplies power to the main processor, disk drives, and keyboard. The voltages it supplies are +5, +12 and -12 vdc. The input power range is between 85 and 132 vac, and 47 to 63 Hz.

MODEL No. CYG 850/1

STATIC DISCHARGE PROTECTION 15KV

CIRCUIT BOARD DESCRIPTION

The following text provides information concerning the circuit boards that are provided in the standard Eagle 1630. The intent of this text is to provide supplemental information for board level maintenance and interfacing.

The seven circuit boards will be described in the following order:

* System processor
* Xebec controller
* SASI board
* Floppy disk controller board
* Monchrome adapter board
* RS232 board
* Parallel printer board

SYSTEM PROCESSOR

The System Processor is the Main Board of the 1600 series and is located in the base of the main system enclosure. It physically has on it all major components along with the right, 62 pin, I/O sockets. The other devices in sockets are: the 8086, 8087, the refresh controller(s), the EPROMs, and the optional 3 rows of RAM. The power supplied to the main board is +12 vdc,-12 vdc, and +5 vdc. (-5 vdc is also available for the I/O bus.)

The only intended components to be serviced, without removing the main board, are the addition of the memory expansion kit and refresh controller, changing of the EPROMs, and adding of the optional co-processor. Should there be any other main board failure, the board is to be removed and replaced.

8086 MICROPROCESSOR

The microprocessor is an Intel 8086-2, operating at 8MHz in the "maximum mode". In the "maximum mode" an Intel 8288 Bus Controller, rather than a 8086, provides some controlling functions. The 8086 itself has a 20-bit (1 megabyte) address bus and a 16-bit data bus. Figure 2 shows the 8086 pin definitions. The 8086 can actually be considered to be two separate units within the CPU. The execution unit (EU) which executes the instructions, and the bus interface unit (BIU) which fetches instructions, reads operands and writes results.

PROCESSOR MEMORY

The RAM and the refresh controller(s) are on the main board itself and do not take an I/O slot. The RAM provided is a 65,536 words by 1-bit dynamic MOS RAM. The access time is 250 NS and the cycle time is 410 NS.

The refresh controllers are Intel 8203s. They provide refresh, RAS and CAS independent of the rest of the processor. There must be one refresh controller for each 256K bytes of RAM.

EPROM

The 1600 series has two EPROMs which contain the bootstrap routine and the system diagnostics. On the main board these are devices U403 and U404, which are in sockets. Device U403 is for the Even/Low byte and device U404 is for the Odd/High byte of each 16-bit word.

The devices themselves are, 32768-bit, ultraviolet erasable and programmable, read only memories. They are each organized as 4096 words by 8-bits per word and operate on a single +5 vdc service. Each device is considered to be fully static (no clocks) and has an access time of 450 NS.

8087 (OPT.)

The Intel 8087 (8 Mhz) Numeric Data Process is EAGLE's Floating Point Math Processor Option. The 8087 adds high-speed numeric processing to the 8086. Once the co-processor is installed it is virtually invisible to the programming, and simply adds potential to the existing processor. The socket at locater U701 is provided for the 8087 and the only additional installation required is the cutting of the trace between E-1 and E-2, as shown in drawing 70-5001. The average increase in performance is approximately 100 times for normal equations.

DMA CONTROLLER

The DMA Controller is a 8237A-5 which has four channels and provides for high speed transfer of data directly between the peripheral and memory. Three of the four DMA Channels are available on the I/O bus. The three DMA request channels on the I/O bus are prioritized as follows:

DRQ1 = S.A.S.I. Board
DRQ2 = Floppy Disk Controller Board
DRQ3 = RS-232 Board

8284-A (CLOCKS)

There are two Intel 8284A on the main board for separate system clocks. Device U1209 is supplied by a 14.31818 MHz crystal, Y1201. It provides CLK2 (4.77 MHz) to the system I/O bus. Device U301 is supplied by a 24 MHz crystal, y401. It provides CLK1 (8MHz) to the 8086. It also provides the reset signal to the rest of the system.

PROGRAMMABLE INTERRUPT CONTROLLER (8259A-2)

The 8259 provides an interrupt to the processor. As many as 8 I/O devices can be handled by the Interrupt Controller. IR0 - IR7 are the 8 priority interrupt requests for the processor. IR0 is the highest priority and IR7 is the lowest. The following is a list of the priorities shown in drawing 72-5001, page 2 of 2, see Schematics at the end of this section.

IR0 = Programmable Interval Timer (8253-5)
IR1 = Keyboard
IR2 = S.A.S.I. board
IR3 = N.U.
IR4 = N.U.
IR5 = RS-232 Board
IR6 = Floppy Disk Controller Board
IR7 = N.U.

PROGRAMMABLE PERIPHERAL INTERFACE (8255A-5).

The 8255A-5 is a general purpose programmable I/O device. It has a total of 24 I/O pins. On the system processor there are two groups being used. Group A (PA0 - PA7) are used to transmit and receive 8-bit data from the keyboard via the 8-bit serial-/parallel shift register (U1203). Group B (PB0 , PB1 & PB7) are used for speaker control.

PROGRAMMABLE INTERVAL TIMER (8253-5).

The 8253-5 is a programmable counter/timer chip. The device is organized as three independent 16-bit counters, each counter having a rate up to 2.5 MHz. The counter outputs are as follows:

Out 0 = IRQ0
Out 1 = DRQ0
Out 2 = To the speaker for tone generation.

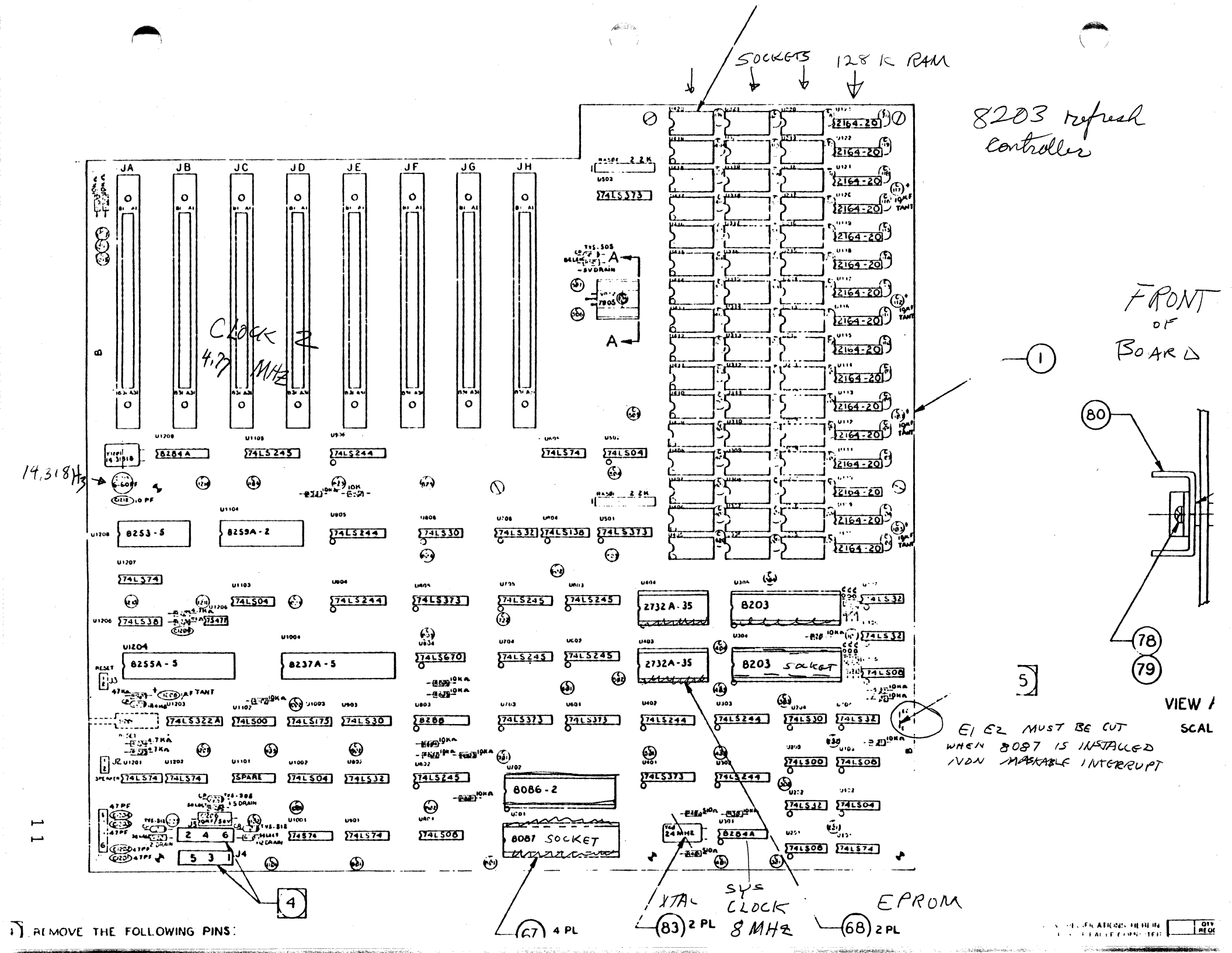
SOCKETS
128 K RAM
8203 refresh controller
FRONT OF BOARD
CLOCK 2
4.77 MHZ
14.318 Hz
JA
JB
JC
JD
JE
JF
JG
JH
8284A
74LS245
74LS244
74LS74
74LS04
8253-5
8259A-2
74LS30
74LS32
74LS138
74LS373
74LS38
2732A-35
8203
8255A-5
8237A-5
74LS670
8203 SOCKET
74LS322A
74LS00
74LS175
8288
74LS08
8086-2
8087 SOCKET
SPARE
74LS74
74LS04
74LS32
74LS08
74LS00
74LS74
2164-20
1
80
78
79
5
VIEW
SCAL
E1 E2 MUST BE CUT WHEN 8087 IS INSTALLED NON MASKABLE INTERRUPT
4
67 4 PL
XTAL
83 2 PL
SYS CLOCK 8 MHZ
EPROM
68 2 PL
REMOVE THE FOLLOWING PINS:

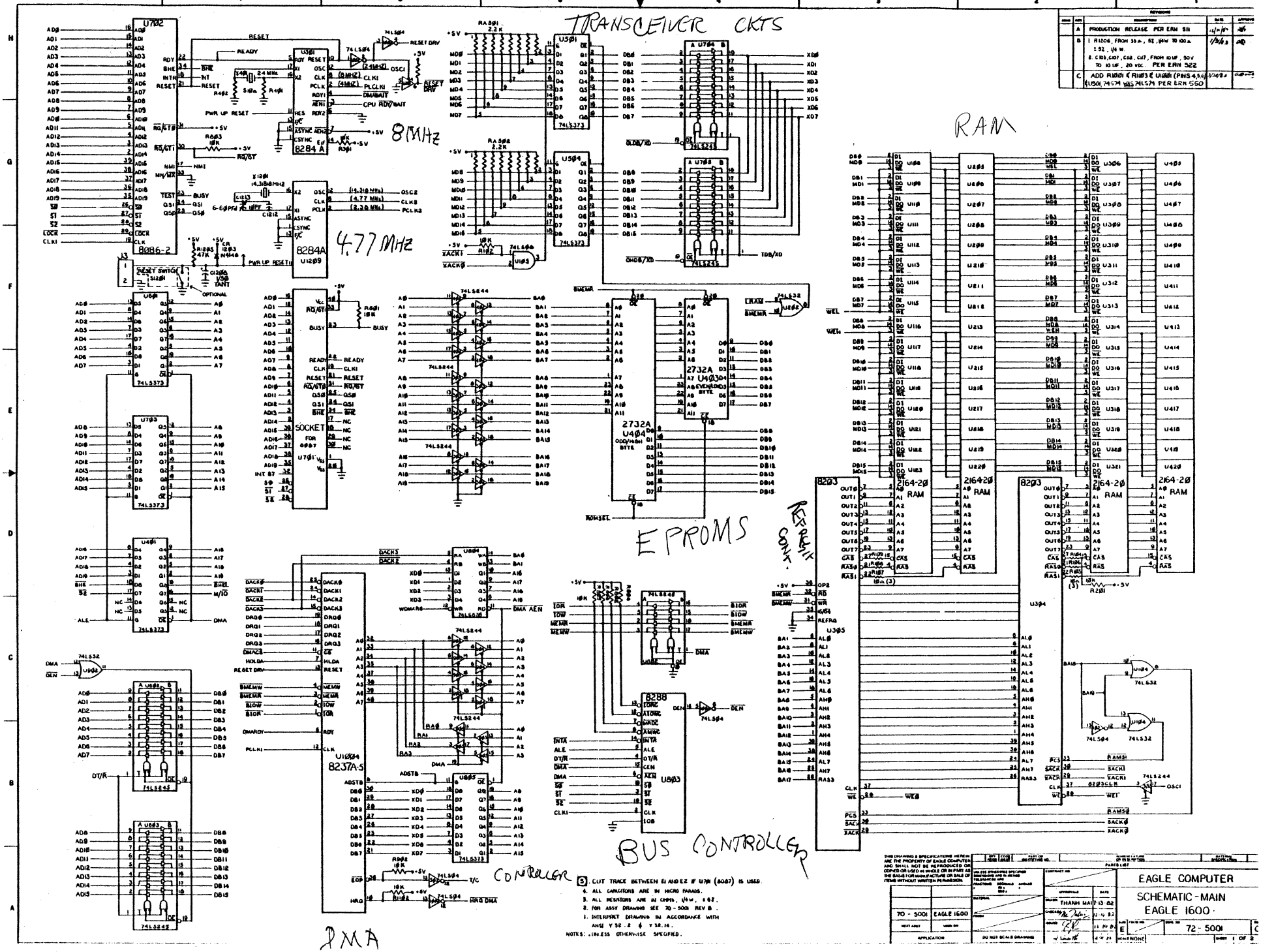
TRANSCEIVER CKTS
RAM
EPROMS
REFRESH CONT.
BUS CONTROLLER
DMA CONTROLLER
CONTROLLER
8 MHz
4.77 MHz
8086-2
8284 A
8284A
U1209
SOCKET FOR 8087
U1004
8237A-5
U803
8288
2732A
U404
U403
2164-20 RAM
8203
U305
U304
74LS373
74LS244
74LS245
74LS32
74LS04
PRODUCTION RELEASE PER ERN 511
1. R1206, FROM 33Ω, 5%, 1/4W TO 100Ω ± 5%, 1/4 W.
2. C103, C107, C112, C117, FROM 10 UF, 50V TO 10 UF, 20 VDC. PER ERN 522
ADD R1001 & R1103 & U1001 (PINS 4,5,6) & U501, 74S74 WAS 74LS74 PER ERN 560
5. CUT TRACE BETWEEN E1 AND E2 IF U701 (8087) IS USED.
4. ALL CAPACITORS ARE IN MICRO FARADS.
3. ALL RESISTORS ARE IN OHMS, 1/4W, ±6%.
2. FOR ASSY DRAWING SEE 70-5001 REV B.
1. INTERPRET DRAWING IN ACCORDANCE WITH ANSI Y32.2 & Y32.14.
NOTES: UNLESS OTHERWISE SPECIFIED.
THIS DRAWING & SPECIFICATIONS HEREIN ARE THE PROPERTY OF EAGLE COMPUTER AND SHALL NOT BE REPRODUCED OR COPIED OR USED IN WHOLE OR IN PART AS THE BASIS FOR MANUFACTURE OR SALE OF ITEMS WITHOUT WRITTEN PERMISSION.
70 - 5001
EAGLE 1600
EAGLE COMPUTER
SCHEMATIC - MAIN
EAGLE 1600
72 - 5001
SCALE NONE
SHEET 1 OF 2

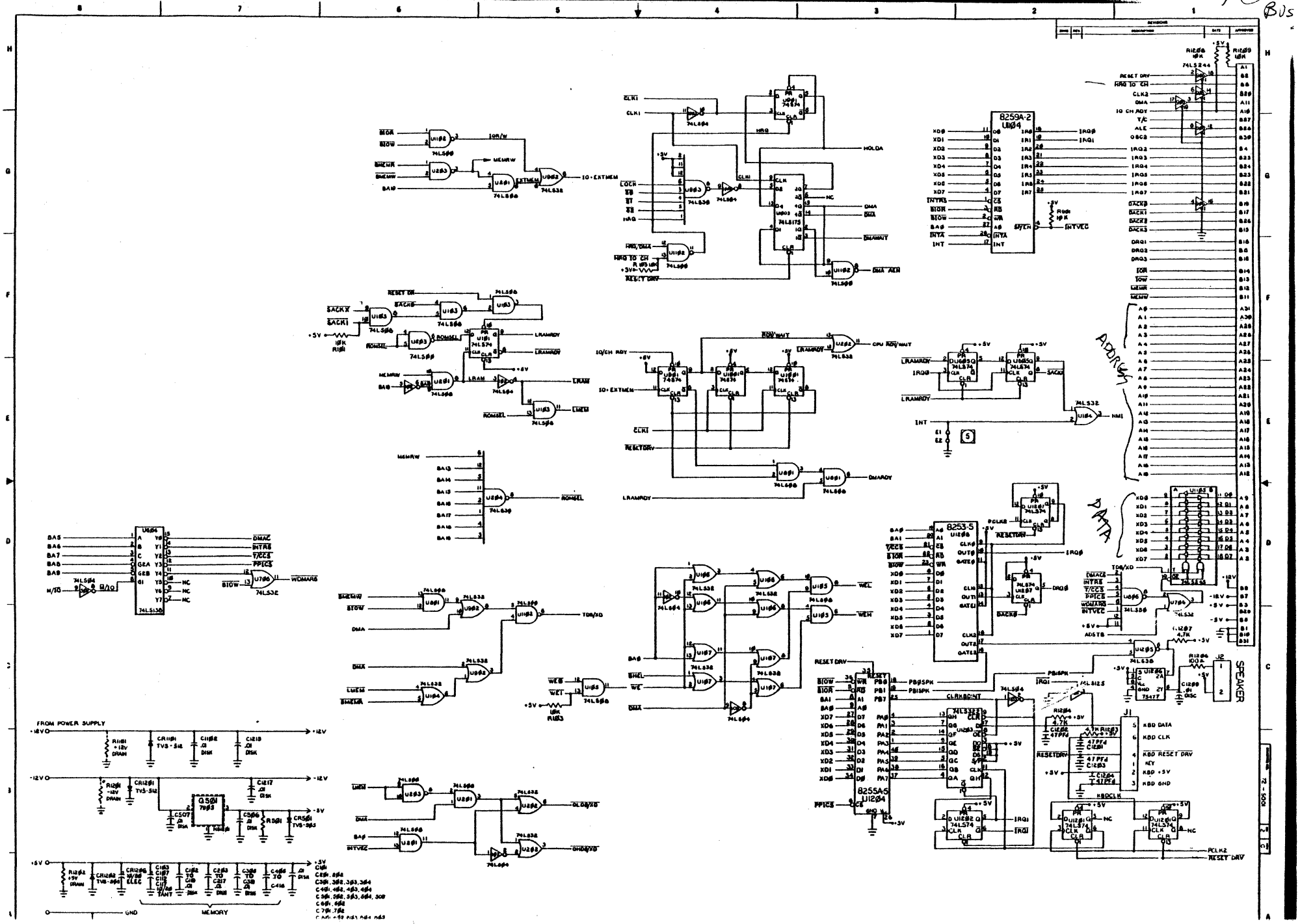
I/O BUS
8259A-2
8253-5
8255A-5
ADDRESS
DATA
SPEAKER
FROM POWER SUPPLY
MEMORY
GND

XEBEC CONTROLLER

The Xebec (model S1410) 5.25" Winchester Disk Controller provides position controls and the data transfer for the hard disk, in the 1630 system. It also provides serial/parallel data conversion, error checking, and drive status monitoring.

The controller uses an 8-bit processor and Prom to oversee the operation of the various LSIs, a Serdes Parallel/Serial Converter, a data separator to change the NRZ data from the Serdes to MFM format for the drive, and a full sector buffer.

SASI BOARD

The Shugart Associates System Interface (SASI) defines a local I/O Bus specification which can be operated at data rates up to an estimated 1.5 megabytes/second, depending upon circuit implementation choices. The primary objective of the interface is to provide host computers with device independence, within a family of devices. Thus disk drives, tape drives, printers, and even communication devices of different types, can be added to the host computer without requiring modifications to generic system hardware or software. Provision is made for the ready addition of non-generic features and functions.

The interface is designed for the compatible operation of a wide range of host and device capabilities, including low cost, low function capabilities, as well as higher cost, higher function capabilities. This gives the interface a great deal of generality.

Provision is made for cable lengths up to 6 meters using single ended drivers and receivers.

The SASI board is designed to use on Eagle 1600 I/O slot (IBM PC Compatible) for hard disk interface.

FLOPPY DISK DRIVE CONTROLLER BOARD

The Eagle 1600 has one or two 5 1/4" flexible diskette drives depending upon the configuration. The drive is capable of writing and reading 80 tracks per surface on a double-sided, double density, 48 or 96 TPI diskette.

The diskettes are formatted in MFM code with 1024 bytes per sector for a total formatted capacity of 819.2 kilobytes per diskette.

The Disk Drive Controller Board plugs into one of the eight slots provided on the main board for system expansion. (Slot "JH" closest to drive is recommended.) The drive interface connector attaches to the disk controller board via a 34-pin flex ribbon cable. The power cable provides + 5VDC and + 12VDC to the drive. The address range of the Disk Controller Board is 3F0H-3F7H.

The Disk Controller Board provides write precompensation to data to be written on the diskette and a phase locked looped for proper clock and data recovery of the data to be read from the diskette.

The Disk Conroller IC, NEC Micro PD765 communicates between the disk drive and system memory for bidirectional data transfers. DMA Channel 2 in Direct Memory Access mode is used through bidirectional I/O Data Buffer. Interrupt level IRQ6, controlled by digital logic, is also used for CPU controlled data transfer.

The decoder logic provides the Drive Select and Drive Motor ON signals.

EAGLE MONOCHROME DISPLAY AND GRAPHIC ADAPTER

This adapter has dual functions; it provides the interface to the Eagle Monochrome Display and is a 720x352 graphics adapter.

The monitor interface is designed around the Motorola 6845 CRT Controller module. There are 16 kilobytes of dynamic memory on the card which are used for the display buffer. The memory is dual ported and may be accessed directly by the CPU. No parity is provided on the display.

The characteristics of the adapter are listed below:

TEXT MODE	GRAPHICS MODE
- 80x25 screen	- 720x352 pixels
- direct drive output	- 8x16 graphic box
- 9x14 character box	- direct drive output
- 18 KHz monitor	- 18 KHz monitor
- character attributes	

The adapter supports 256 character codes. A 4 kilobyte character generator contains the fonts for the character codes.

The following information is a technical overview, from the reference manuals, of which might be useful when discussing the use of other monitors with the Eagle 1600.

MONOCHROME VIDEO/GRAPHICS BOARD

18.7 KHZ Horizontal Scanning Frequency
720 X 352 Pixels (graphics mode)

J2 = Composite Video at 18.432 1.25V peak
J3 = 9 Pin - D type connector

PIN #	SIGNAL
1,2	GND.
6	Highlight
7	Video Signal
8	Horizontal Drive
9	Vertical Drive
3,4,5	N.U.

COLOR BOARD (MED. RES.)

15.75 KHZ Horizontal Scanning Frequency
320 X 200 Pixels

1 - Composite Video (R,G,B)

1 - 9 Pin - D Type Connector

PIN #	SIGNAL
1,2	GND.
3	Red
4	Green
5	Blue
6	Intensity
7	Reserved
8	Horizontal Drive
9	Vertical Drive

RS232/2 BOARD

The RS232/2 Serial Communications Board contains two modem-compatible RS232 ports which can be used for serial printers as well as serial communications applications.

1 Async/sync 25-pin port (RS232)
1 Async 9-pin port (RS232)

The RS232/2 board contains seven major functional blocks. They are the Serial Communications Controller, the System Clock, the Interrupt Service, Control Logic, Address Decode Logic, Output Buffers/Drivers, and the Data Bus Drivers.

The master component is a Zilog 8530 Serial Communications Controller IC, hereinafter referred to as the SCC. The 8530 contains on board a baud rate generator, CRC checker/generator, and a parity checker, all of which are fully programmable. The baud rate generator can be programmed from 300 baud to 19.2 kilobaud. (Each port has a separate baud rate clock). The SCC channel B can also be programmed for synchronous operation supporting protocols to include monosync, bisync, SDLC, SDLC loop, and extended sync modes. The SCC has a programmable vector interrupt controller which can be configured to individual interrupt needs.

MODEMS

The RS232 board as provided is set up for printers only. If a modem is to be used one of two options must be done, depending on the modem used. Either a "modem eliminator cable" must be used, or if the modem has the option to set its interface to the computer port for DCE vs. a DTE connection, set the connection to a DCE interface.

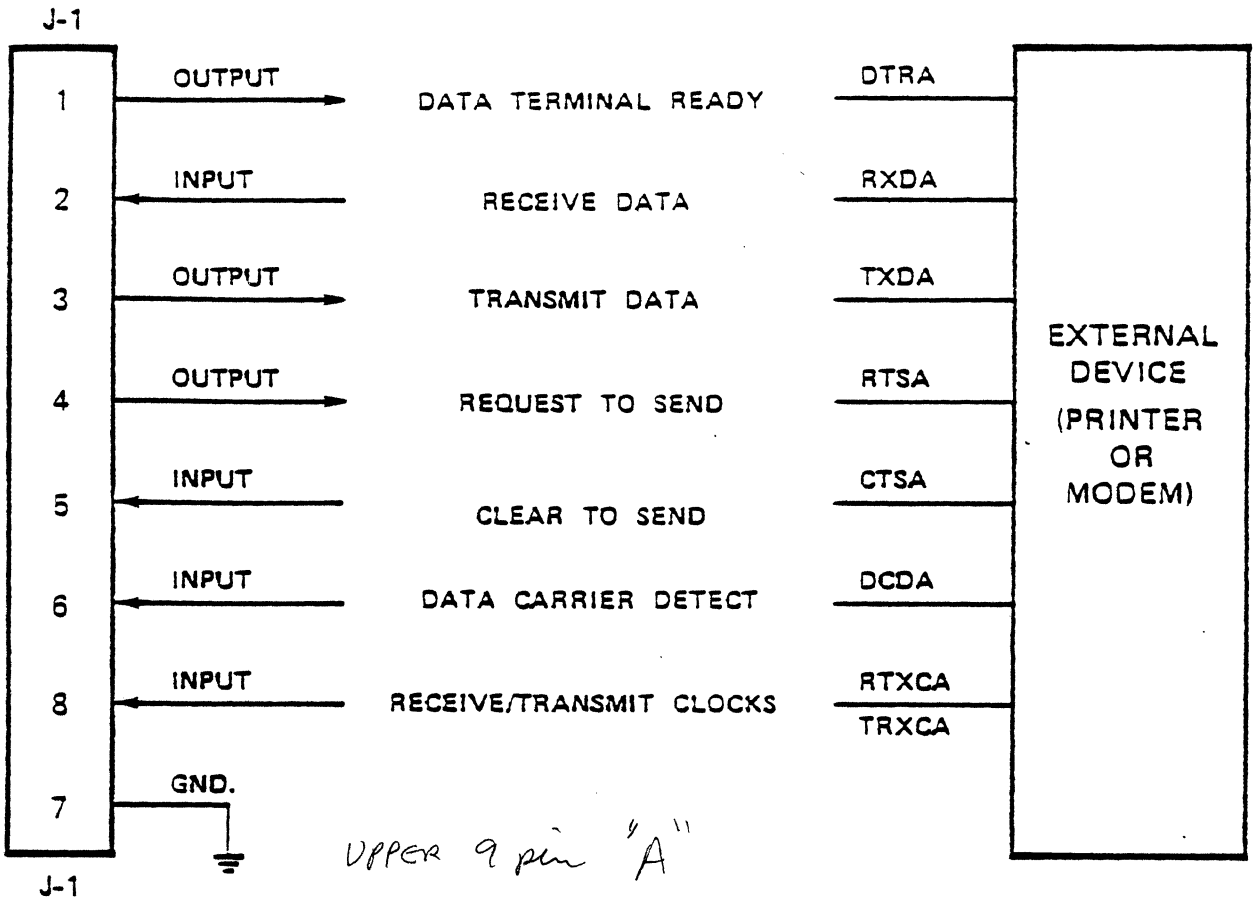

Upper 9 pin "A"

Lower 25 pin "B"

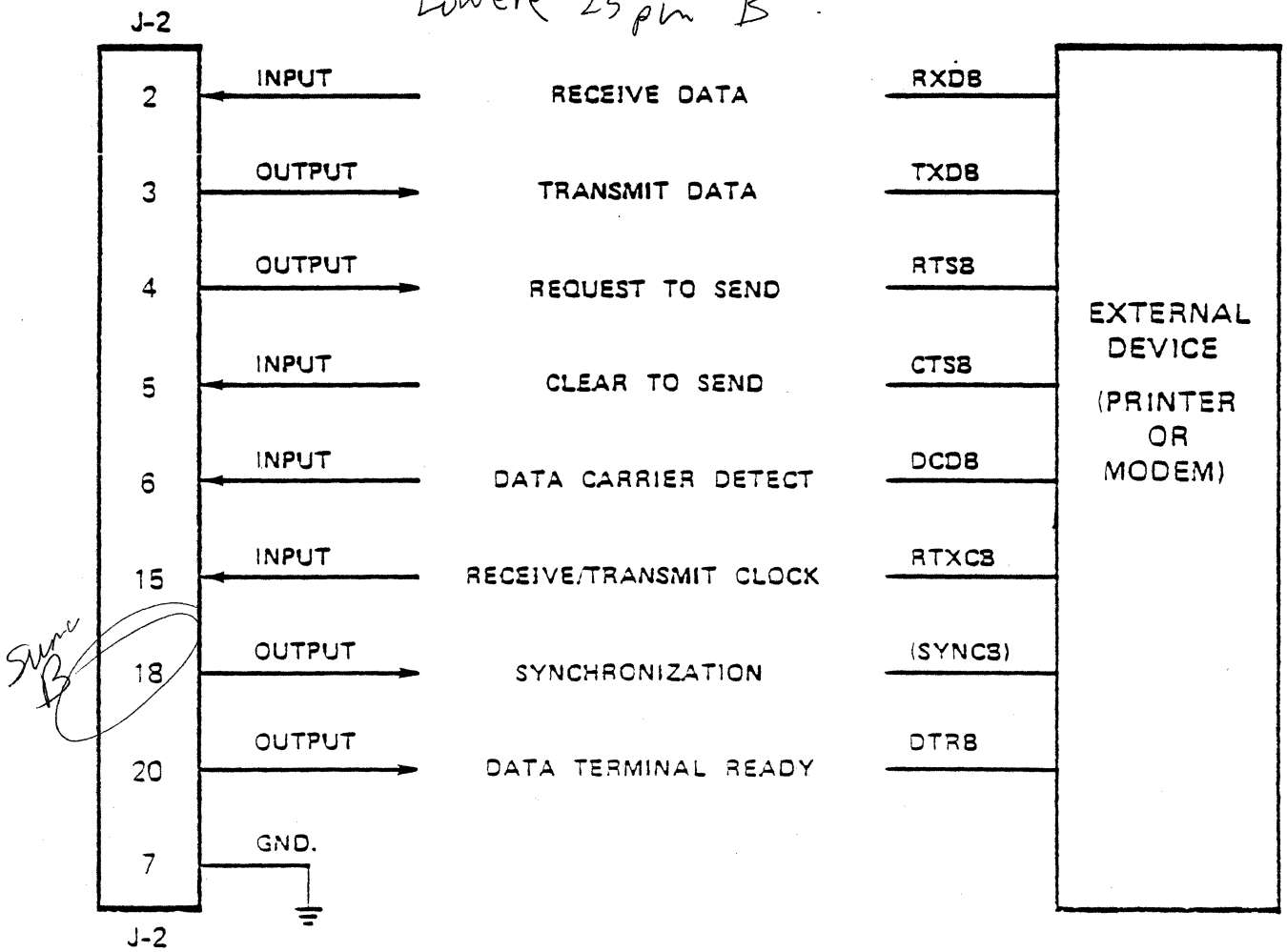

Sync B

PARALLEL PRINTER BOARD

The Parallel Printer Board provides Centronics compatible interfacing for a parallel printer. The board contains an AM 8255A-5 Programmable Peripheral Interface device and associated circuits.

The following is a list of signal names and functions used by the Eagle Parallel Printer Board. The list indicates input or output from the Eagle system.

DATA STROBE (Output)	Indicates that DATA 1 to DATA 8 are effective. Pulse width requires 1 micro sec. MIN. HIGH --- normal condition LOW --- readout of data
DATA 1 to DATA 8 (Output)	Indicates information from 1 bit to 8 bits.(8th bit is ignored.) DATA 1 --- HIGH DATA 0 --- LOW
BUSY (Input)	DC level signal which indicates whether printer is available or not. LOW --- Data Input HIGH --- Only DC 1 code is inputted.
PE (Input)	DC level signal which becomes "HIGH" when paper is short.
SLOT (Input)	DC level signal which is "HIGH" when printer is selected.
INPUT PRIME (Output)	Puts printer to initial condition.
FAULT (Input)	DC level signal which becomes "LOW" when printer is in the following condition: * At PE * Character selection error, carriage error, PF error * Select Off

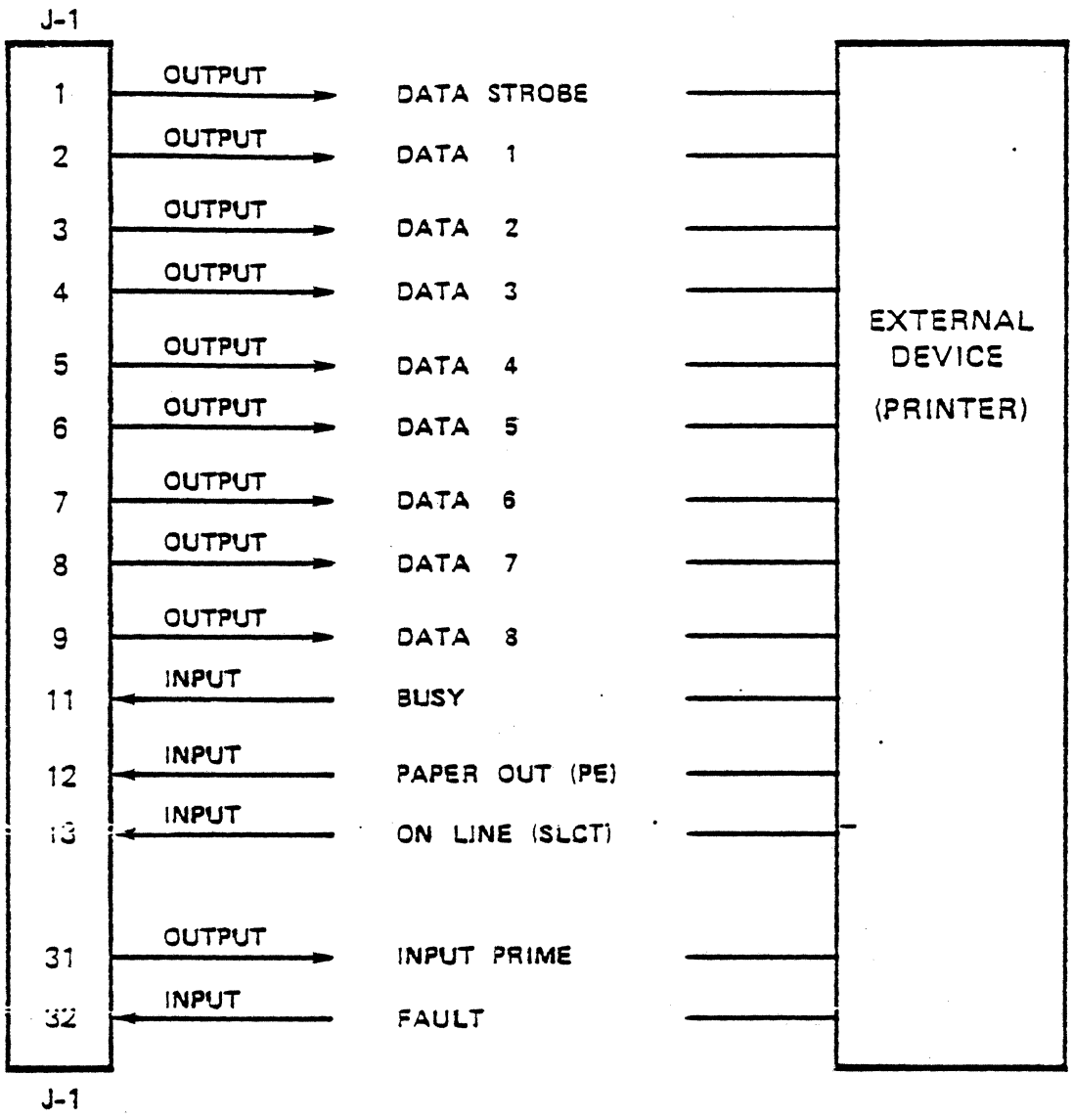
J-1
1
2
3
4
5
6
7
8
9
11
12
13
31
32
OUTPUT
DATA STROBE
DATA 1
DATA 2
DATA 3
DATA 4
DATA 5
DATA 6
DATA 7
DATA 8
INPUT
BUSY
PAPER OUT (PE)
ON LINE (SLCT)
OUTPUT
INPUT PRIME
INPUT
FAULT
EXTERNAL DEVICE
(PRINTER)
J-1

CENTRONIX

FLOPPY DISK DESCRIPTION

The Eagle 1620 and 1630 use 5 1/4", direct drive, floppy disk drives. Each disk drive is capable of storing 780 K bytes formatted (1 MB unformatted) at 96 TPI. This is approximately 500 pages of text per drive. Each drive is double sided, double density.

FUNCTIONAL SPECIFICATIONS: LIKE OUR PC

TEAC MODEL FD 55F
MITSUBISHI MODEL M 4853

Recording density	5922 bits per inch
Encoding method	MFM
Track density	96 TPI
Number of cylinders	80
Number of tracks	160
Number of heads	2
Rotation speed	300 rpm
Rotation period	200 ms
Index	1
Media	D/S 96 TPI, Standard 5.25" diskette.

KEYBOARD PC KEYTRONIC MODEL 65-2554

The keyboard is a separate device from the main unit and is attached via a serial interface cable to the right side of the Main Enclosure.

The keyboard is of a low profile, capacitive microprocessor design. The microprocessor is contained in the keyboard and is an Intel-8084, which returns scan codes to the Main Processor Board. There are 105 keys total, with 24 dedicated function keys.

The keyboard is considered a separate module and if a problem occurs it is simply unplugged and replaced.

WARNING
Do not unplug the keyboard with the power on.

POWER SUPPLY

AC 5 AMP SLO-BLO

All system power requirements, except the CRT module, are supplied by a single 50 watt, 3 voltage level, switching regulator. The input power range is between 85 and 132 VAC, and 47 to 63 HZ., single phase. The typical input current is 2.2 amps.

The output DC voltages are:		
	+ 5 vdc	0.5 to 10 amps
	+12 vdc	0.175 to 3.5 amps
	-12 vdc	0.02 to 0.4 amps

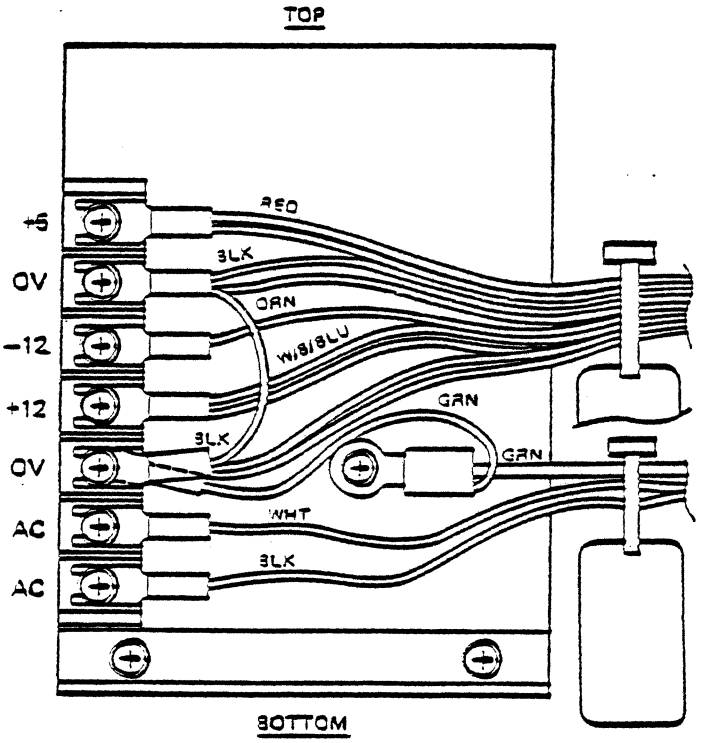

SYSTEM DIAGNOSTICS

There are two different system diagnostic tests associated with the Eagle 1600 series. There is the actual system diagnostic test which is contained in EPROM and then there is the "test and initialiaztion" tests which are on floppy diskette.

SYSTEM DIAGNOSTIC TEST ("T" TEST)

The "T" test in the EAGLE 1600 series tests the RAM area of the system. This program is contained in all models of the 1600 series in the EPROM.

The "T" test can be started by holding down the "T" key and pressing the RESET button; release the key when the test display appears. To exit the test, press the "ESCAPE" key.

This tests the RAM area by writing random data throughout all the memory space and then reading it back. Also, every other pass "reverses" the video display. The results displayed are the size of RAM, how many passes made, and how many errors are found.

For systems with 512K of RAM, the test is the same. However, if, for instance, the display shows only 256K of RAM, it indicates there is possibly a bad RAM in the next bank of RAM. In this case, bank (row) #3.

Bank (row)#1 = 128 k total
Bank (row)#2 = 256 k total
Bank (row)#3 = 384 k total
Bank (row)#4 = 512 k total

DISK DIAGNOSTICS

This section describes the procedures to use with the Test and Initialization Diskette. To fully use the options on this diskette, you will also need the Software Master Diskette; a blank formatted diskette; and the RS232 loop-back cable.

Each disk diagnostic option will be detailed step-by-step as you would use them on a Eagle 1630. Procedures that are different will be noted throughout the sections for other models.

STEP 1	To enter this test, power the system up.
STEP 2	Insert the "T & I" diskette. Hold down the "F" key and press the RESET button. Release the "F" key when you hear the keyboard alarm.
STEP 3	The disk diagnostic Main Menu like the one below will appear on the screen.

Eagle Computer

Test and Initialization Procedures

Your options are:

(1) Floppy Disk Test
(2) Winchester Disk Test
(3) Video and Keyboard Test
(4) Video Graphics Test
(5) RS232/2 Board Test
(6) Parallel Printer Test
(7) Install Software
(8) Quit

Which is your choice?

Some Tests destroy erase disk memory

OPTION (1) FLOPPY DISK TEST

If a Read/Write test is to be performed, a formatted diskette will be needed in advance. Also, your "T & I" diskette should have a "Write Protect" tab installed over the write protect notch.

STEP 1	Select Option 1.
STEP 2	Press the [RETURN] key. A menu for the disk diagnostic will be displayed on the screen.
STEP 3	Select the type of Addressing; Functions 1 - 4. As an example, select Function 2, Ascending Addressing. Note that the word "Ascending" appears on the menu.
STEP 4	Specify the confinement. Note on the menu that confinement is set to Tracks 1:160, Sections 1:5.
STEP 5	Select Function 8. Note that the confinement Menu appears on the screen. For this example, select Function 4.

NOTE
Function 5, "Select other disk drive", allows you to select Drive A: or B: for the 1620.

STEP 6	Select Option 6, "Return to the previous menu". The first Read-/Write Test Menu reappears on the screen.
STEP 7	Select type of test, Options 5 - 7. For this example select Function 7 Read/Write Test.
STEP 8	A warning note will appear in the menu area.

STEP 9

At this point, because you are doing a Read/Write Test, exchange the "T & I" diskette with the blank, formatted diskette. Then press the "Y" key to start the test.

As the test is running, note the increasing counts under the headings, Attempted and Sector, which indicate that there are no errors.

STEP 10

Should there be any error it will be displayed as the number of Returns.

In the right hand side of the display, an error message will appear. From left to right, the error display format will give the following:

1. The error number (how many Returns);

2. The time of the error (system time, usually since last power on, or hardware reset);

3. Whether it is a Read or Write error;

4. The Track and Sector;

5. An error message detailing the Hardware Reset shown below.

Note:

Should an error be indicated:

First-Escape the text and retry. The error may have been caused by incorrect seating of the disk|ette.

Second-Escape the text and Reset, to return to the Main Menu from the hard disk. Re-format the diskette before trying this test again.

If the error still exists, the floppy disk drive is probably defective and needs to be replaced.

STEP 11 Exit this test by pressing the [ESCAPE] key.

OPTION (2) WINCHESTER DISK TEST

STEP 1 — Select Option (2) and press the [RETURN] key.

STEP 2 — The Hard Disk Formatting Menu, like the one below, will appear on the screen:

Eagle Computer Hard Disk Formatting

Press Up Arrow and Down Arrow to change selection. Press <cr> when ready.

Exit MS-DOS - returns to previous menu
Format Disk
Write/Read Test
Read Verify Only
Random Read Test
Run Continuous Diagnostics
Add to Alternate Track Table
Select Controller/Disk to Test

STEP 3 — To enter each selection, use the up/down arrow keys on the keyboard to select, and then press the [RETURN] key to enter.

The following paragraphs detail the options available using the "Eagle Computer Hard Disk Formatter" menu of the "T & I" diskette.

EXIT TO MS-DOS — This selection will return you to the Main Menu of the "T & I" Diskette.

FORMAT DISK — Formats a hard disk drive. Once selected, a warning will appear concerning the fact that any information on the disk will be erased. The next selection will be whether a 10 MB hard disk (CMI-5412) or a 40 MB (CMI-5640) disk is installed.

Once started, the formatting will be done first, and then a Read/Write Test will be performed. Total elapsed time for the complete operation, on a 10 MB disk, is 9-1/2 minutes. At the conclusion of the test an error summary is given.

Press any key to return to the previous menu.

READ/WRITE TEST

Will perform a Write/Read Test on the hard disk. This is the same test as in the "FORMAT DISK" selection, without formatting. Any information on the disk will be destroyed.

READ VERIFY ONLY

This selection does a read only test on the hard disk, but does not destroy any data on the disk. Total elapsed time is 6 1/2 minutes, and a summary is given at the end of the test.

RANDOM READ TEST

This is the same test as the "Read Verify only", but does random reads for only 2 minutes.

RUN CONTINUOUS DIAGNOSTICS

This test is also for the hard disk and will destroy any data on the hard disk. The sequence is a read/write test up to the total 306 cylinders and the back down, then a "Random Read Test" for 2 minutes, and then back to the Read/Write test.

The test will run until the [ESCAPE] key is pressed. Then by pressing any key the summary will be displayed.

ADD TO ALTERNATE
TRACK TABLE

This test does a read only test to identify any bad tracks and "map" them out. Any data in that bad track will be lost.

SELECT CONTROLLER/DISK
TO TEST

This selection allows you to test and format within the system hard disk (Controller 0) or a hard disk add-on (Controller 1), i.e. a File 10. This effects all the tests in Option 2. Controller 0 will be selected automatically when the diskette is first booted up.

When the [RETURN] key is pressed, the Select Menu will be displayed.

To exit Option 2, select "Exit to MS-DOS" and press the [RETURN] key.

OPTION (3) VIDEO AND KEYBOARD TEST

STEP 1 — Select Option 3 and press the [RETURN] key.

STEP 2 — Once the program has been accessed, the CRT display should show numbers completely bordering the display.

STEP 3 — To perform the test, press any key on the keyboard and the corresponding character should fill the display to encircle the border. The character set for the function and control keys are shown in Figure 1.

STEP 4 — To exit this test, press the [ESCAPE] key. The Main Menu of the "T & I" diskette should appear.

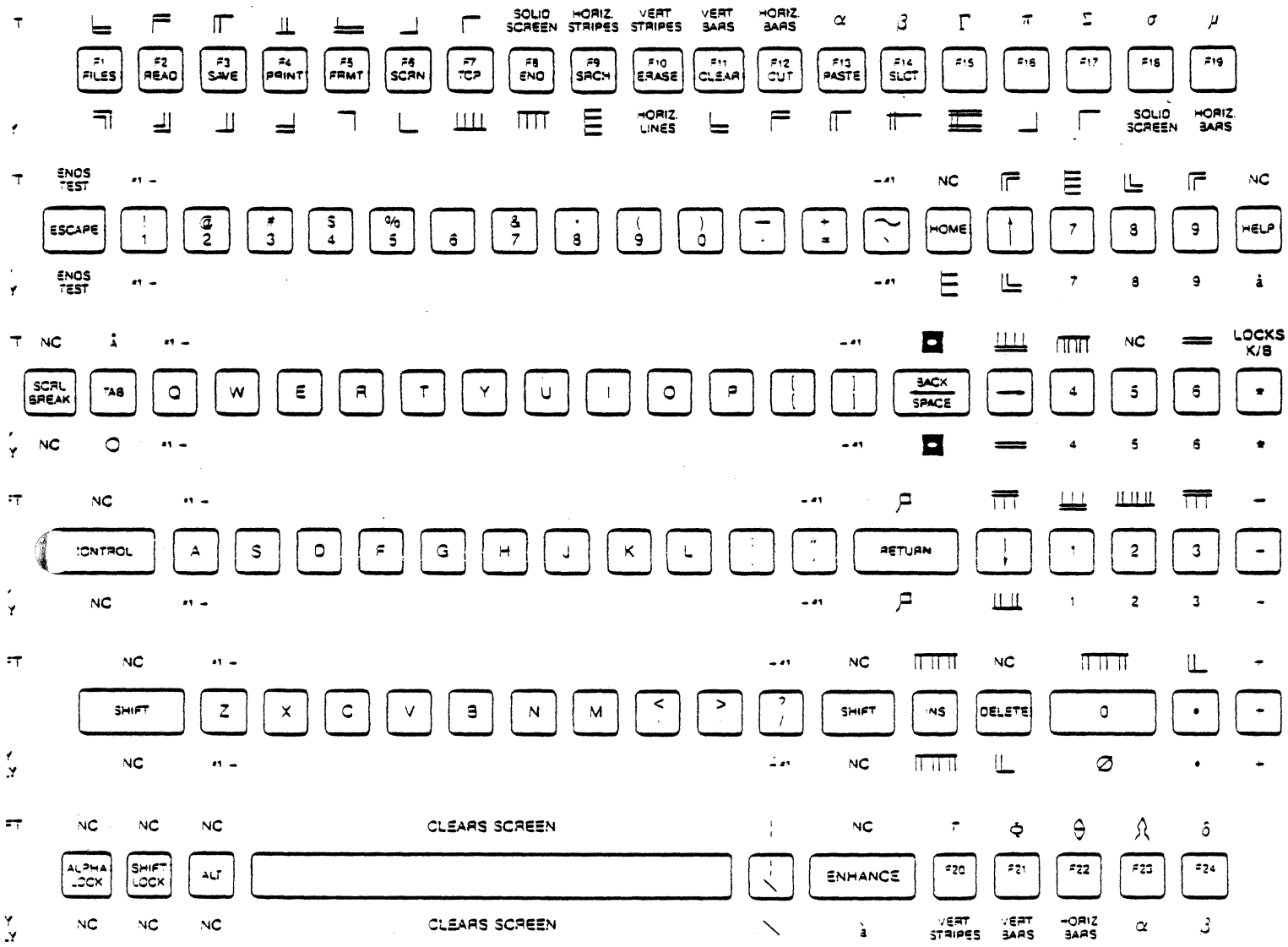

Note — =1. = Standard ASCII characters will be displayed as shown on the key, upper & lower case.
NC = No Character.
The character seen above key is the one sent when the shift key and character key are depressed.

OPTION (4) VIDEO GRAPHICS TEST

STEP 1	Select Option 4 and press the [RETURN] key.
STEP 2	This test consists solely of a 1600 graphics demo. It should draw boxes decreasing in size, clear, and then draw boxes increasing in size. Then it will do highlighting and erase the lines one at a time. The last display will be a box graph. The test will end and automatically return to the Main Menu of the "T & I" diskette.

OPTION (5) RS232/2 BOARD TEST

STEP 1	Install the RS232/2 loop back cable to J-1 and J-2 of the RS232 serial board.
STEP 2	Select Option 5 and press the [RETURN] key.
STEP 3	Select which test you want to run. The long test will give a choice of between 130,000 and 1,000 passes per baud rate.

OPTION (6) PARALLEL PRINTER TEST

STEP 1	To run this test a parallel printer must be connected and operational. This test is similar to the test run in the utility systems under "Assign System Parameters".
STEP 2	Assign your system parameters. The test will send ASCII characters across to be printed on the printer.

STEP 3	Select Option 6 and press the [RETURN] key.
STEP 4	The printer should start printing when the floppy diskette is accessed.
STEP 5	Press the "ESCAPE" key to exit the test.

OPTION (7) INSTALL SOFTWARE

STEP 1	Select Option 7 and press the [RETURN] key.
STEP 2	You will need the floppy diskette labeled "MASTER SOFTWARE DISKETTE" to complete this operation. A back-up diskette, even though all files were copied, cannot be substituted.
STEP 3	Press any key. Once the floppy diskette is accessed, remove the "T & I" diskette and insert the "MASTER SOFTWARE DISKETTE".
STEP 4	At the A: prompter, type "INS" and press the [RETURN] key. The files will now be transfered. The transfer will take approximately 5 minutes.
STEP 5	Once the transfer is complete, the system will reboot and the Main Menu will be displayed from the hard disk.

MS-DOS OPERATING SYSTEM NOTES

The intent of this section is to provide a technician, who is not already familar with MS-DOS, with additional information to enhance his knowledge of the Eagle 1600 series. Situations may arise when the Menu driven options do not adequately address software related questions or problems, but the use of the operating system may assist. A more detailed explanation of MS-DOS can be obtained in the section on the operating system in the "Eagle 1600 Reference Manual" (P/N 93-1603-000).

The following are some of the MS-DOS commands and short explanations of their use. There are other variations of these commands, but these are the most frequently used formats with an Eagle 1630.

Any characters contained in brackets [ ] are optional.

A: FORMAT C: [/S]	Formats a floppy diskette, and the /S causes the operating system to also be copied.
A: COPY A:*.*C:	Copies all files on the hard disk to the floppy diskette. The diskette must have been formatted first. The wildcard characters "*.*" may be dropped and replaced by specific file names after the disk designators. Also, the character "+" may be used to string multiple files together to create a single file.
A: REN OLD.FILE NEW.FILE	Renames the first file listed as the second file.
A: DEL ANY.FILE	Deletes, from the designated disk, the specified file.
A: DIR [DISK:] [/P OR /W]	Lists a directory of the disk. When /P is used, it will cause a pause when the screen is filled. When the /W is used, only file names are displayed, 5 per line.
A:CHKDSK [DISK:]	Checks the designated disk drive for consistency and then returns the status of the disk. This gives an accounting, in bytes, of the disk space.

A: DATE A: TIME	These can be either set or read.
A: COMMAND	This test exits the MS-DOS operating system and returns to the Main Menu.

The following is a partial list of functions that can be used while in the operating system, by using the "CONTROL" key and the designated character key.

CONTROL + "C"	Interrupts the current command.
CONTROL + "S"	Stops the display output on the CRT. Press any key to resume.
CONTROL + "P"	Enables the printer so that whatever follows, while still in the operating system, is output to the printer on line.
CONTROL + "N"	Cancels the output to the printer.

PROCESSER 8088-2 8 MHz

1620 - 2 FD, 96 TPI, 128K
XPAND TO 512

1630 1 FD, 1 HD 10MB 128K RAM

1640 1 FD, 1 HD 32 MB 512 K RAM