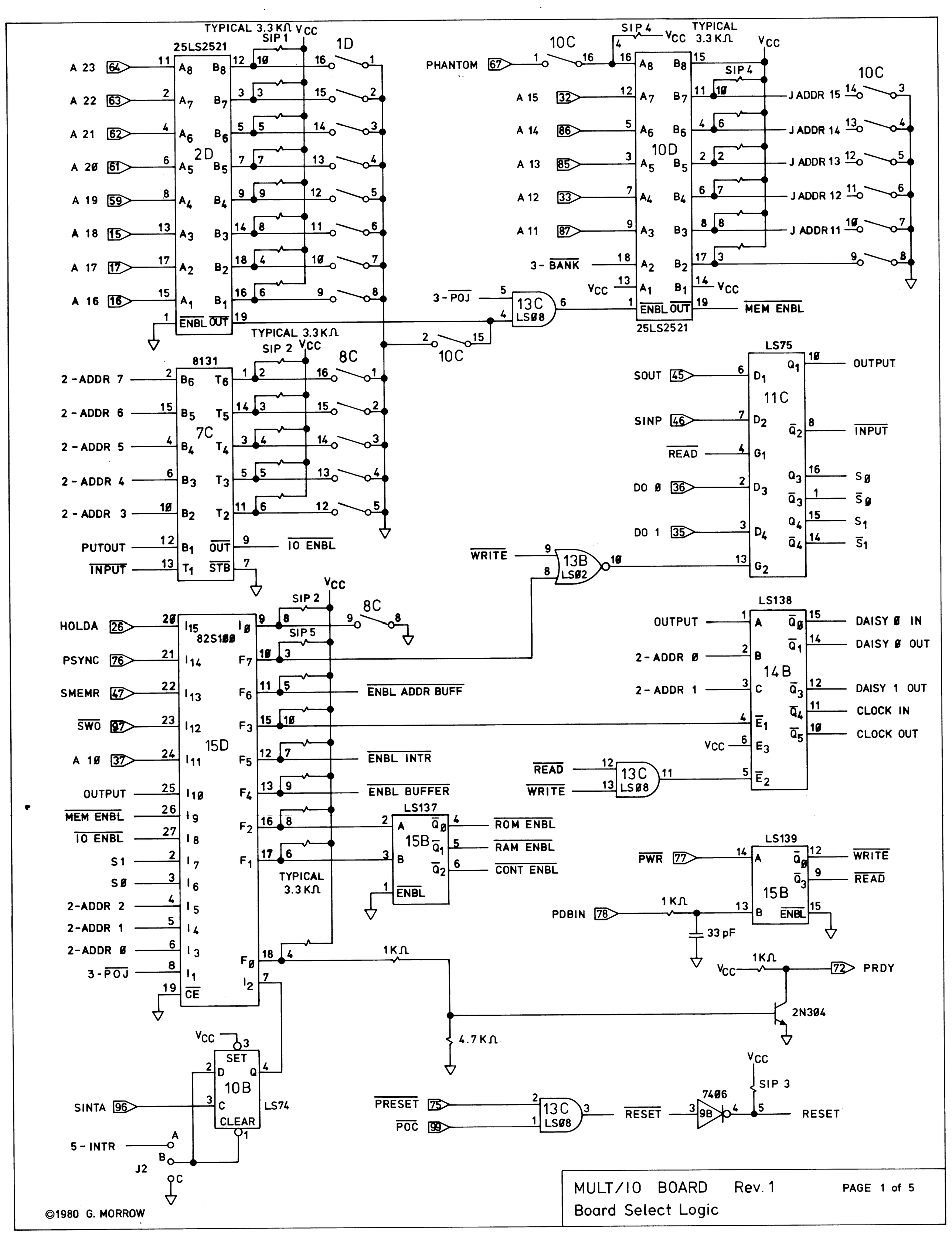

MULT/IO BOARD Rev. 1

Board Select Logic

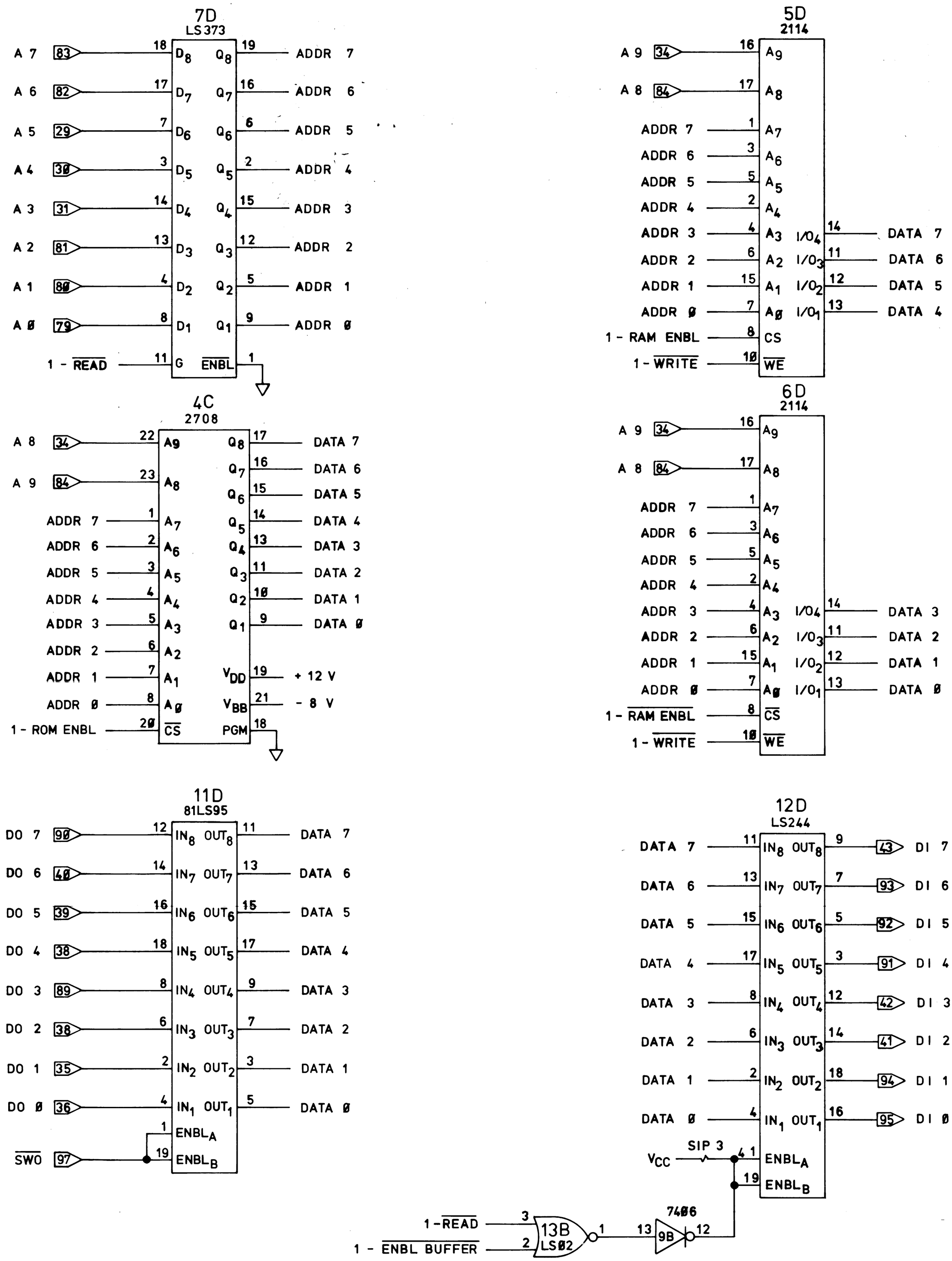

MULT/IO BOARD Rev 1

Buffers, RAM, ROM

©1980 G. MORROW

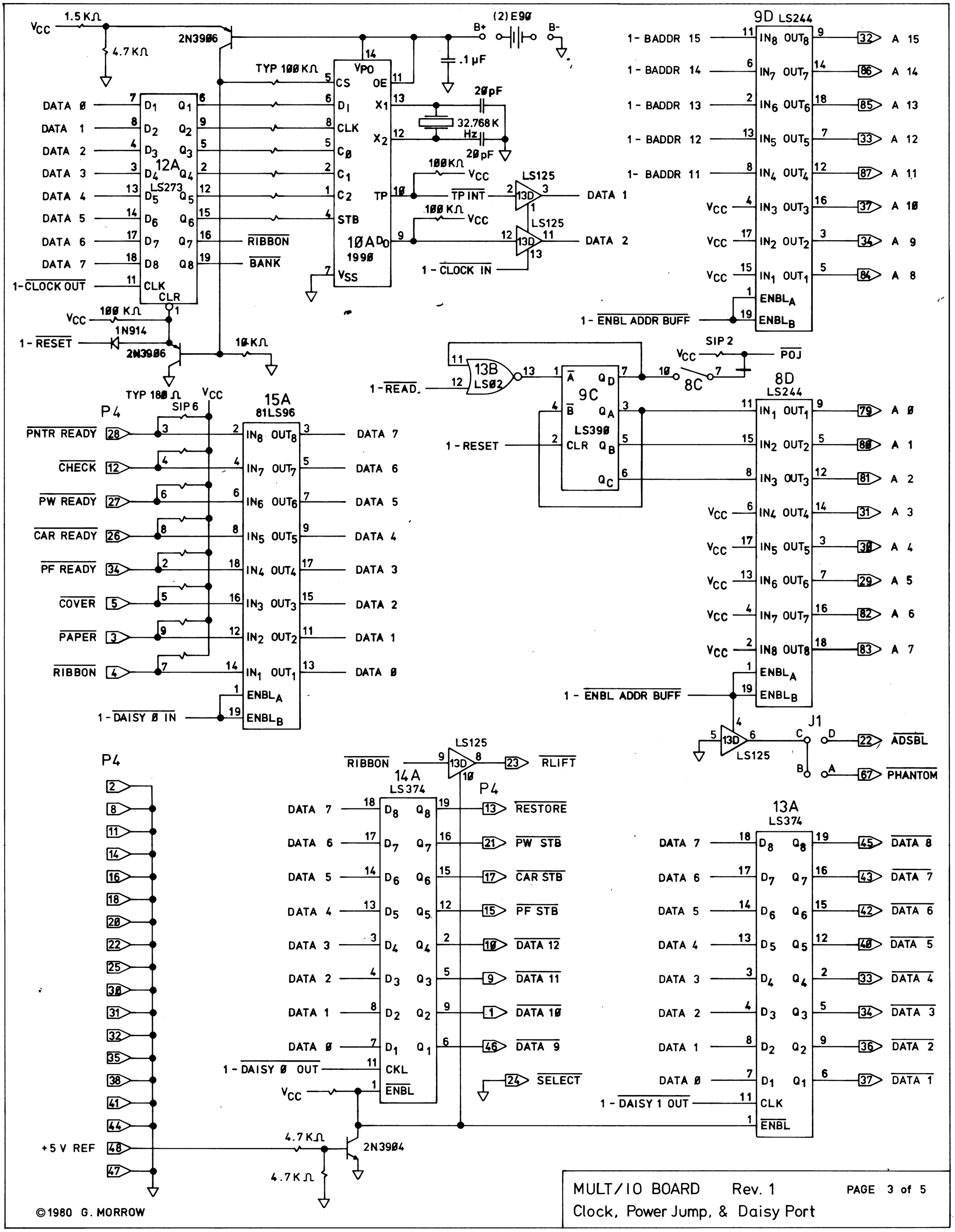

MULT/IO BOARD Rev. 1 PAGE 3 of 5

Clock, Power Jump, & Daisy Port

©1980 G. MORROW

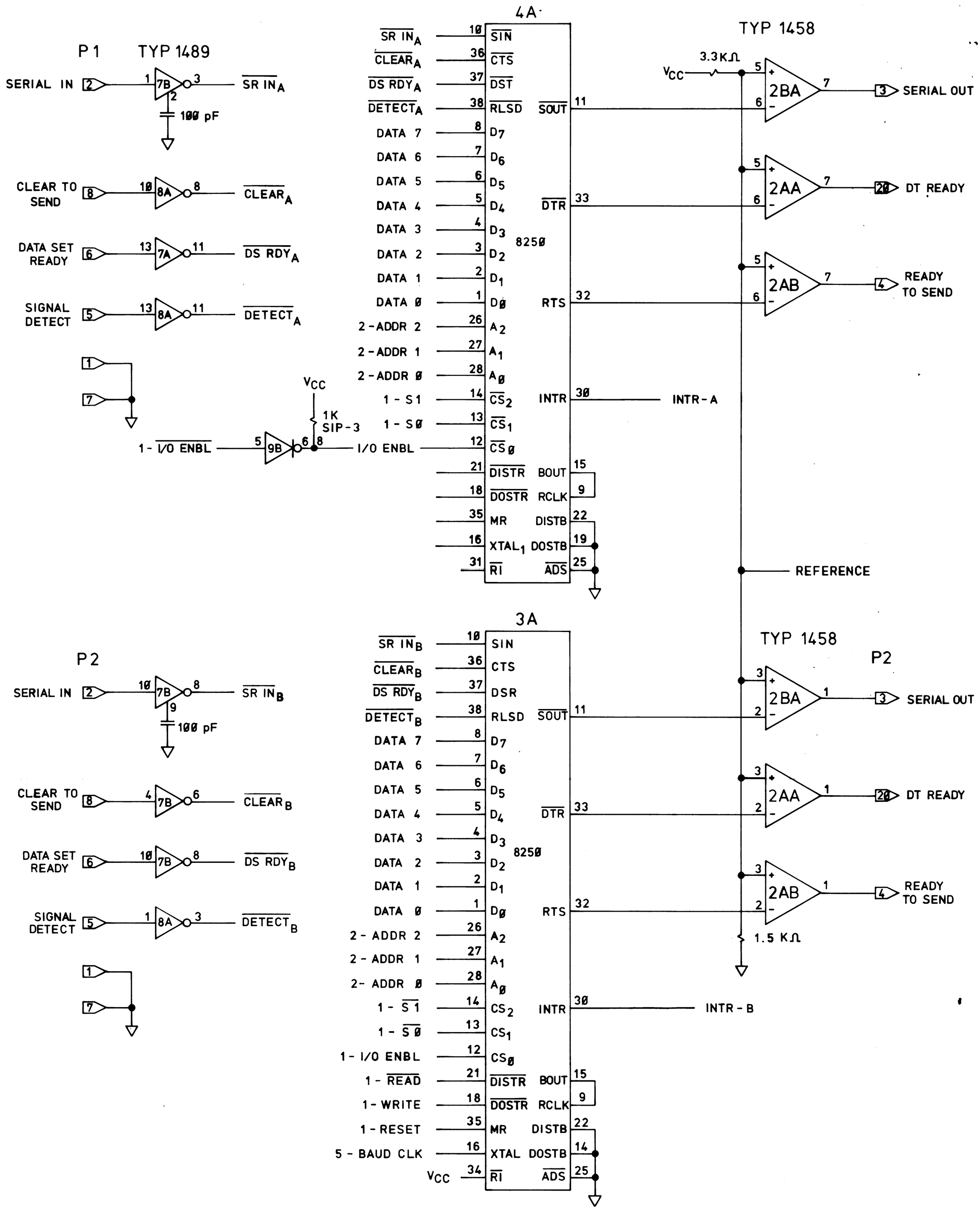

© 1980 G. MORROW

MULT/IO BOARD Rev 1
Serial Channels A & B

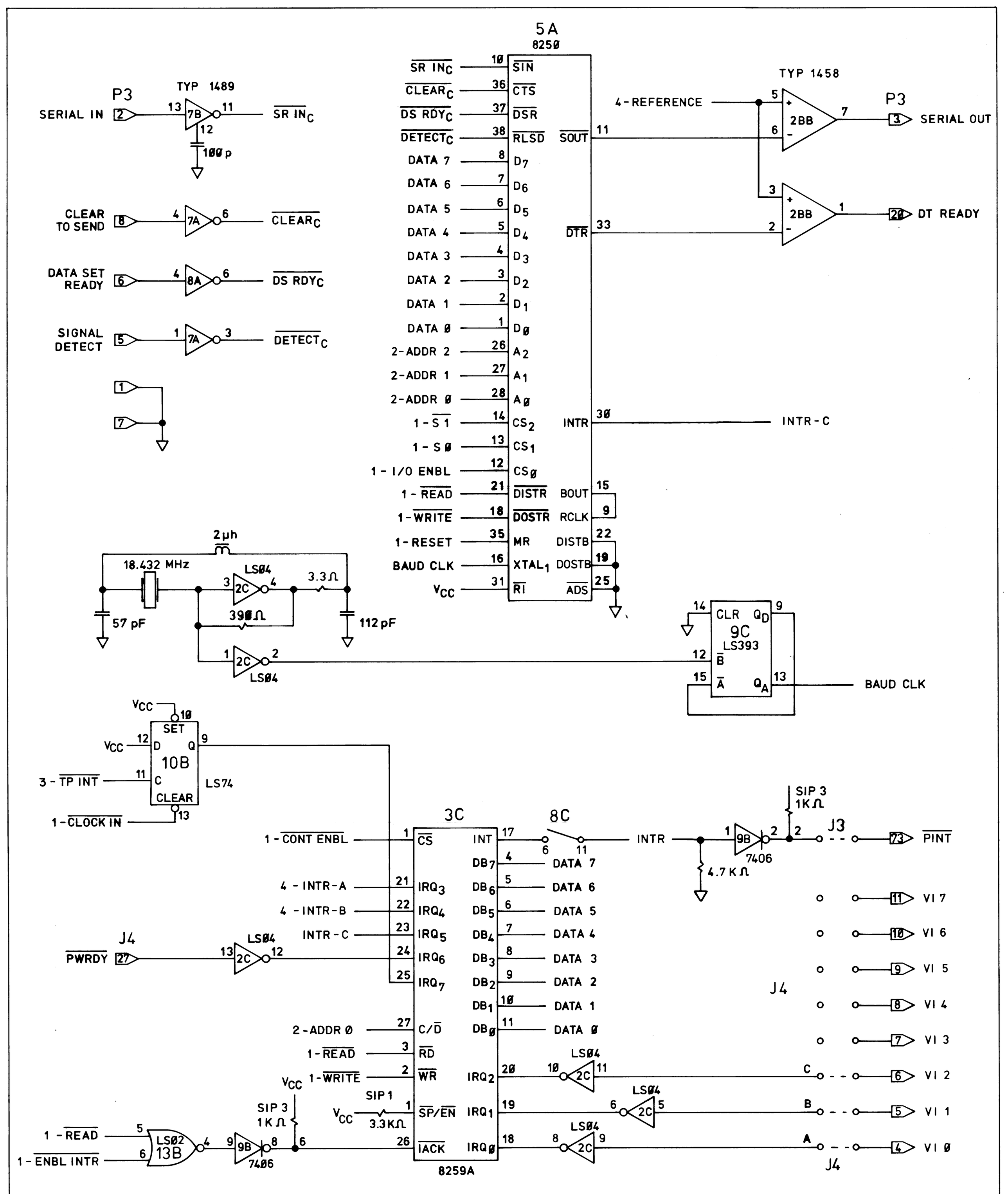

©1980 G. MORROW

MULT/IO BOARD Rev. 1

Serial Channel C & Interrupt Logic