THIS IS A

PETITE (T2) SCHEMATIC BOOK

THIS IS THE PROPERTY OF

PERQ
SYSTEM CORP.

DISTRIBUTED SOLELY FOR IN-HOUSE
AND CUSTOMER REFERENCE ONLY.

VERSION B
BOOK No._____
VOLUME I
DATE 2/85

COMPANY CONFIDENTIAL
THIS DOCUMENT IS NOT TO BE REPRODUCED IN ANY FORM, OR TRANSMITTED IN WHOLE OR IN PART, WITHOUT PRIOR WRITTEN AUTHORIZATION OF Perq Systems Corporation.

PERQ

PETITE (T2)

P.C. BOARD SCHEMATIC BOOK DIRECTORY

VOLUME I

BOARD TYPE	CURRENT P.C. BOARD REVISIONS	PART NUMBER
DIRECTORY		
REVISION CONTROL SHEET		
MOTHER BOARD (MOM)	B	111285-02
CENTRAL PROCESSOR UNIT (16kCPU)	D	111332-02
ETHERNET I/O (EIO)	AT	110006-02
EIO W/O ETHERNET (NIO)	Y	110198-02
LANDSCAPE/2 MEGABYTE MEMORY w/256k rams (LAND 2 MEG)	E	110245-02
NOTES		

PERQ PETITE REVISION CONTROL SHEET

SCHEMATIC PAGE NUMBER	MOM 111205-00	16K CPU 111332-00	EIO 110005-00	NIO 110198-00	2 MEG MEMORY/LAND w/256K RAM 110245-00	1 MEG MEMORY/LAND 110241-00	2 MEG MEMORY/LAND 110197-00	5 1/4 DISK/MICROP 110224-00	5 1/4 DISK/MAXTOR 110259-00	PORTRAIT MONITOR 110214-00	MONITERM LANDSCAPE MONITOR	PORTRAIT TABLET 100247-00	LANDSCAPE TABLET 110100-00	DDS 111216-00	OPTION I/O /ETHERNET 100225-00	OPTION I/O /ETHERNET/CANON 100226-00	OPTION I/O /CANON 100227-00			
	CURRENT PAGE REVISION LETTER																			
1	B	A	AN	T	A	Q	Q	G	F	L		D	B	A	H	J	C			
2	B	A	AN	T	A	Q	Q	G	F	K		D	B		H	J	C			
3	B	A	AN	T	A	F	C	G	F	J		D	B		H	J	C			
4		A	AS	Y	A	F	C	J	H	E					H	J	C			
5		A	AS	Y	A	F	C	G	F						H	J	C			
6		A	AS	Y	A	F	C	H	G						H	J	C			
7		A	AN	T	A	F	C	J	H						H	J	C			
8		A	AN	T	A	F	C	G	F						H	J	C			
9		A	AN	T	A	F	C								H	J	C			
10		A	AN	T	A	F	C								H	J	C			
11		A	AN	T	A	P	P								H	J	C			
12		A	AN	T	A	P	P								H	J				
13		A	AN	T	A	Q	Q								H	J				
14		A	AM	T	A	Q	Q								H	J				
15		A	AP	V	A	Q	Q								H	J				
16		A	AP	V	A	Q	Q								H	J				
17		B	AN	T	A	F	C								H	J				
18		A	AN	T	A	F	C								H	J				
19		A	AN	T	A	F	C								H	J				
20		A	AN	T	A	F	C								H	J				
21		A	AQ	U	A	F	C								H	J				
22		A	AN	T	A	F	C								H	J				
23		A	AN	T	A	F	C								H	J				
24		A	AN	T	A	F	C								H	J				
25		A	AN	T	A	Q	Q								H	J				
26		A	AN	T	D	C	C									J				
27		A	AN	T	E	Q	Q									J				
28		C	AN	T		Q	Q									J				
29		A	AN	T		Q	Q									J				
30		A	AN	T		L	L									J				
31		A	AN	T		Q	Q									J				
32		D	AN	T		Q	Q													
33		A	AN	T		T	T													
34		A	AN	T		U	U													
35		A	AN	T																
36		A	AN	T																
37		A	AN	X																
38		A	AN	T																
39		A	AN	T																
40		A	AN	T																
41		A	AT	T																
42		A	AN	T																
43		A	AN	T																
44		A	AN	T																
45		A	AN																	
46			AN																	
47			AN																	
48			AN																	
49			AR																	
50			AN																	
51			AN																	
52			AN																	
53			AN																	
54			AN																	
55			AN																	
56			AN																	

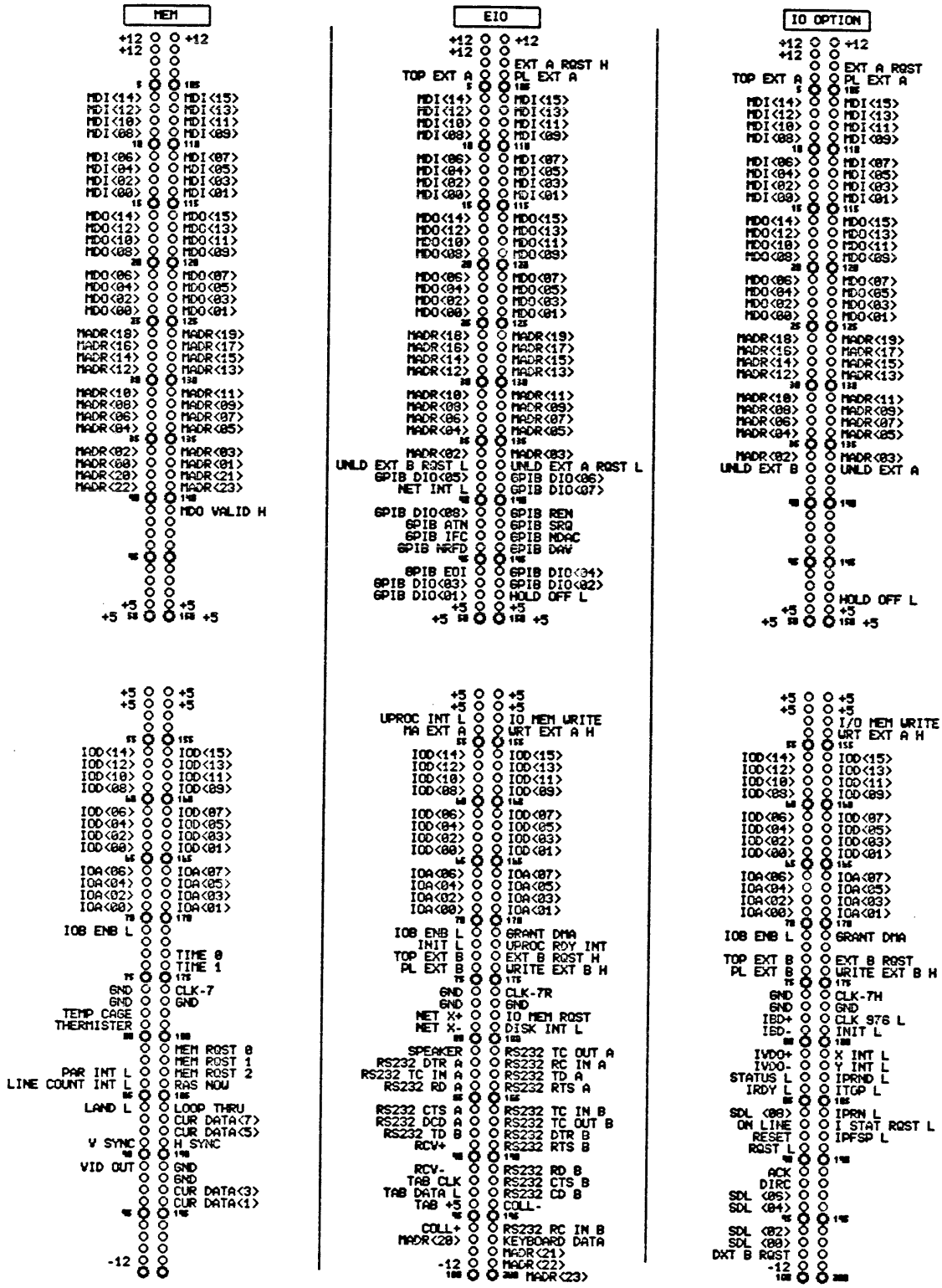
MEM
+12 +12
MDI<14> MDI<15>
MDI<12> MDI<13>
MDI<10> MDI<11>
MDI<08> MDI<09>
MDI<06> MDI<07>
MDI<04> MDI<05>
MDI<02> MDI<03>
MDI<00> MDI<01>
MDO<14> MDO<15>
MDO<12> MDO<13>
MDO<10> MDO<11>
MDO<08> MDO<09>
MDO<06> MDO<07>
MDO<04> MDO<05>
MDO<02> MDO<03>
MDO<00> MDO<01>
MADR<18> MADR<19>
MADR<16> MADR<17>
MADR<14> MADR<15>
MADR<12> MADR<13>
MADR<10> MADR<11>
MADR<08> MADR<09>
MADR<06> MADR<07>
MADR<04> MADR<05>
MADR<02> MADR<03>
MADR<00> MADR<01>
MADR<20> MADR<21>
MADR<22> MADR<23>
MDO VALID H
+5 +5
+5 +5
IOD<14> IOD<15>
IOD<12> IOD<13>
IOD<10> IOD<11>
IOD<08> IOD<09>
IOD<06> IOD<07>
IOD<04> IOD<05>
IOD<02> IOD<03>
IOD<00> IOD<01>
IOA<06> IOA<07>
IOA<04> IOA<05>
IOA<02> IOA<03>
IOA<00> IOA<01>
IOB ENB L
TIME 0
TIME 1
GND CLK-7
GND GND
TEMP CAGE
THERMISTER
MEM ROST 0
MEM ROST 1
PAR INT L MEM ROST 2
LINE COUNT INT L RAS NOW
LAND L LOOP THRU
CUR DATA<7>
CUR DATA<5>
V SYNC H SYNC
VID OUT GND
GND
CUR DATA<3>
CUR DATA<1>
-12
EIO
+12 +12
EXT A RQST H
TOP EXT A PL EXT A
MDI<14> MDI<15>
MDI<12> MDI<13>
MDI<10> MDI<11>
MDI<08> MDI<09>
MDI<06> MDI<07>
MDI<04> MDI<05>
MDI<02> MDI<03>
MDI<00> MDI<01>
MDO<14> MDO<15>
MDO<12> MDO<13>
MDO<10> MDO<11>
MDO<08> MDO<09>
MDO<06> MDO<07>
MDO<04> MDO<05>
MDO<02> MDO<03>
MDO<00> MDO<01>
MADR<18> MADR<19>
MADR<16> MADR<17>
MADR<14> MADR<15>
MADR<12> MADR<13>
MADR<10> MADR<11>
MADR<08> MADR<09>
MADR<06> MADR<07>
MADR<04> MADR<05>
MADR<02> MADR<03>
UNLD EXT B RQST L UNLD EXT A RQST L
GPIB DIO<05> GPIB DIO<06>
NET INT L GPIB DIO<07>
GPIB DIO<08> GPIB REN
GPIB ATN GPIB SRQ
GPIB IFC GPIB NDAC
GPIB NRFD GPIB DAV
GPIB EOI GPIB DIO<04>
GPIB DIO<03> GPIB DIO<02>
GPIB DIO<01> HOLD OFF L
+5 +5
+5 +5
+5 +5
UPROC INT L IO MEM WRITE
MA EXT A WRT EXT A H
IOD<14> IOD<15>
IOD<12> IOD<13>
IOD<10> IOD<11>
IOD<08> IOD<09>
IOD<06> IOD<07>
IOD<04> IOD<05>
IOD<02> IOD<03>
IOD<00> IOD<01>
IOA<06> IOA<07>
IOA<04> IOA<05>
IOA<02> IOA<03>
IOA<00> IOA<01>
IOB ENB L GRANT DMA
INIT L UPROC RDY INT
TOP EXT B EXT B RQST H
PL EXT B WRITE EXT B H
GND CLK-7R
GND GND
NET X+ IO MEM RQST
NET X- DISK INT L
SPEAKER
RS232 DTR A RS232 RC IN A
RS232 TC IN A RS232 TD A
RS232 RD A RS232 RTS A
RS232 CTS A RS232 TC IN B
RS232 DCD A RS232 TC OUT B
RS232 TD B RS232 DTR B
RCV+ RS232 RTS B
RCV- RS232 RD B
TAB CLK RS232 CTS B
TAB DATA L RS232 CD B
TAB +5 COLL-
COLL+ RS232 RC IN B
MADR<20> KEYBOARD DATA
MADR<21>
-12 MADR<22>
MADR<23>
IO OPTION
+12 +12
EXT A RQST
TOP EXT A PL EXT A
MDI<14> MDI<15>
MDI<12> MDI<13>
MDI<10> MDI<11>
MDI<08> MDI<09>
MDI<06> MDI<07>
MDI<04> MDI<05>
MDI<02> MDI<03>
MDI<00> MDI<01>
MDO<14> MDO<15>
MDO<12> MDO<13>
MDO<10> MDO<11>
MDO<08> MDO<09>
MDO<06> MDO<07>
MDO<04> MDO<05>
MDO<02> MDO<03>
MDO<00> MDO<01>
MADR<18> MADR<19>
MADR<16> MADR<17>
MADR<14> MADR<15>
MADR<12> MADR<13>
MADR<10> MADR<11>
MADR<08> MADR<09>
MADR<06> MADR<07>
MADR<04> MADR<05>
MADR<02> MADR<03>
UNLD EXT B UNLD EXT A
HOLD OFF L
+5 +5
+5 +5
+5 +5
I/O MEM WRITE
WRT EXT A H
IOD<14> IOD<15>
IOD<12> IOD<13>
IOD<10> IOD<11>
IOD<08> IOD<09>
IOD<06> IOD<07>
IOD<04> IOD<05>
IOD<02> IOD<03>
IOD<00> IOD<01>
IOA<06> IOA<07>
IOA<04> IOA<05>
IOA<02> IOA<03>
IOA<00> IOA<01>
IOB ENB L GRANT DMA
TOP EXT B EXT B RQST
PL EXT B WRITE EXT B H
GND CLK-7M
GND GND
IBD+ CLK 976 L
IBD- INIT L
IVDO+ X INT L
IVDO- Y INT L
STATUS L IPRND L
IRDY L ITGP L
SDL <00> IPRN L
ON LINE I STAT RQST L
RESET IPFSP L
RQST L
ACK
DIRC
SDL <06>
SDL <04>
SDL <02>
SDL <00>
DXT B RQST
-12

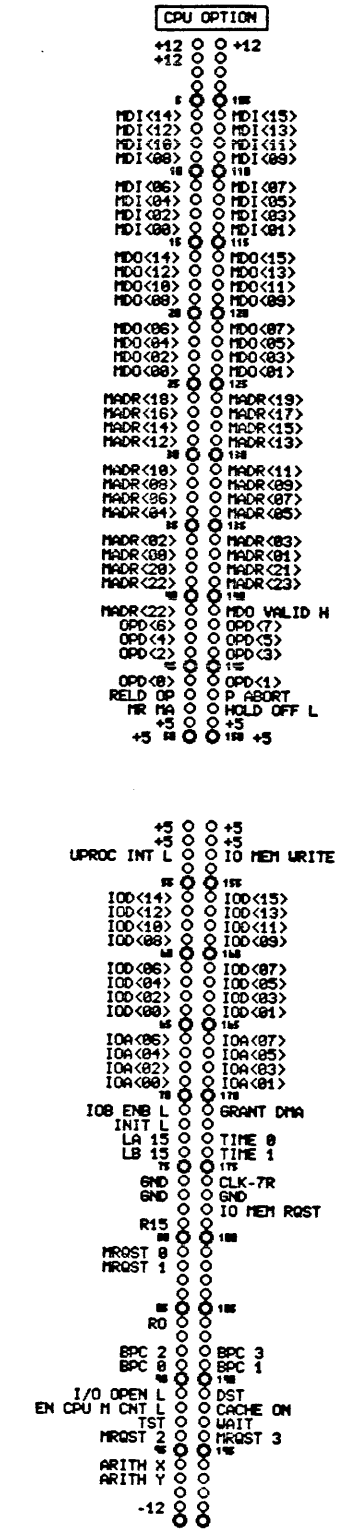
CPU OPTION
+12
+12
MDI<14>
MDI<15>
MDI<12>
MDI<13>
MDI<10>
MDI<11>
MDI<08>
MDI<09>
MDI<06>
MDI<07>
MDI<04>
MDI<05>
MDI<02>
MDI<03>
MDI<00>
MDI<01>
MDO<14>
MDO<15>
MDO<12>
MDO<13>
MDO<10>
MDO<11>
MDO<08>
MDO<09>
MDO<06>
MDO<07>
MDO<04>
MDO<05>
MDO<02>
MDO<03>
MDO<00>
MDO<01>
MADR<18>
MADR<19>
MADR<16>
MADR<17>
MADR<14>
MADR<15>
MADR<12>
MADR<13>
MADR<10>
MADR<11>
MADR<08>
MADR<09>
MADR<06>
MADR<07>
MADR<04>
MADR<05>
MADR<02>
MADR<03>
MADR<00>
MADR<01>
MADR<20>
MADR<21>
MADR<22>
MADR<23>
MADR<22>
MDO VALID H
OPD<6>
OPD<7>
OPD<4>
OPD<5>
OPD<2>
OPD<3>
OPD<0>
OPD<1>
RELD OP
P ABORT
MR MA
HOLD OFF L
+5
+5
+5
+5
+5
+5
UPROC INT L
IO MEM WRITE
IOD<14>
IOD<15>
IOD<12>
IOD<13>
IOD<10>
IOD<11>
IOD<08>
IOD<09>
IOD<06>
IOD<07>
IOD<04>
IOD<05>
IOD<02>
IOD<03>
IOD<00>
IOD<01>
IOA<06>
IOA<07>
IOA<04>
IOA<05>
IOA<02>
IOA<03>
IOA<00>
IOA<01>
IOB ENB L
GRANT DMA
INIT L
LA 15
TIME 0
LB 15
TIME 1
GND
CLK-7R
GND
GND
IO MEM RQST
R15
MRQST 0
MRQST 1
RO
BPC 2
BPC 3
BPC 0
BPC 1
I/O OPEN L
DST
EN CPU M CNT L
CACHE ON
TST
WAIT
MRQST 2
MRQST 3
ARITH X
ARITH Y
-12

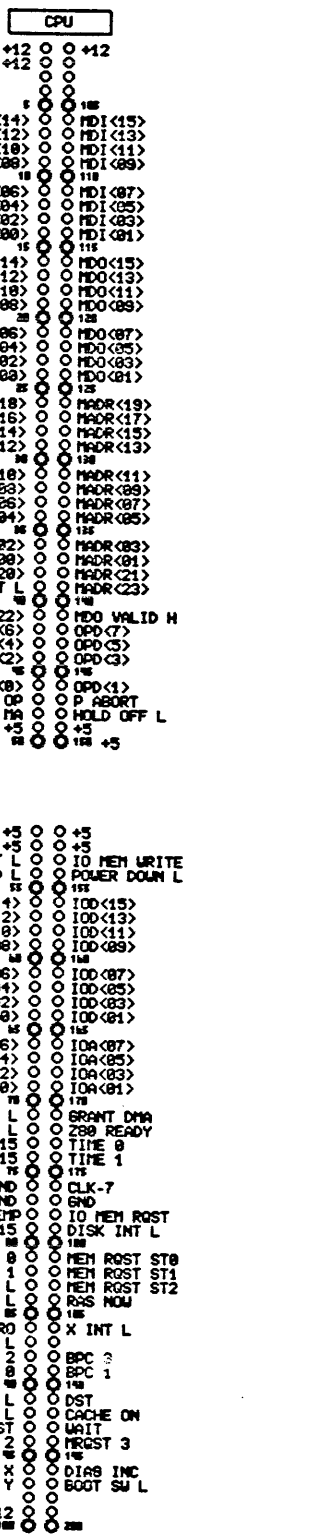
CPU
+12
+12
MDI<14>
MDI<15>
MDI<12>
MDI<13>
MDI<10>
MDI<11>
MDI<08>
MDI<09>
MDI<06>
MDI<07>
MDI<04>
MDI<05>
MDI<02>
MDI<03>
MDI<00>
MDI<01>
MDO<14>
MDO<15>
MDO<12>
MDO<13>
MDO<10>
MDO<11>
MDO<08>
MDO<09>
MDO<06>
MDO<07>
MDO<04>
MDO<05>
MDO<02>
MDO<03>
MDO<00>
MDO<01>
MADR<18>
MADR<19>
MADR<16>
MADR<17>
MADR<14>
MADR<15>
MADR<12>
MADR<13>
MADR<10>
MADR<11>
MADR<08>
MADR<09>
MADR<06>
MADR<07>
MADR<04>
MADR<05>
MADR<02>
MADR<03>
MADR<00>
MADR<01>
MADR<20>
MADR<21>
NET INT L
MADR<23>
MADR<22>
MDO VALID H
OPD<6>
OPD<7>
OPD<4>
OPD<5>
OPD<2>
OPD<3>
OPD<0>
OPD<1>
RELD OP
P ABORT
MR MA
HOLD OFF L
+5
+5
+5
+5
+5
+5
UPROC INT L
IO MEM WRITE
MDO VALID L
POWER DOWN L
IOD<14>
IOD<15>
IOD<12>
IOD<13>
IOD<10>
IOD<11>
IOD<08>
IOD<09>
IOD<06>
IOD<07>
IOD<04>
IOD<05>
IOD<02>
IOD<03>
IOD<00>
IOD<01>
IOA<06>
IOA<07>
IOA<04>
IOA<05>
IOA<02>
IOA<03>
IOA<00>
IOA<01>
IOB ENB L
GRANT DMA
INIT L
Z80 READY
LA 15
TIME 0
LB 15
TIME 1
GND
CLK-7
GND
GND
TEMP
IO MEM RQST
R15
DISK INT L
MRQST 0
MEM RQST ST0
MRQST 1
MEM RQST ST1
PAR INT L
MEM RQST ST2
LINE COUNT INT L
R&S NOW
RO
X INT L
Y INT L
BPC 2
BPC 3
BPC 0
BPC 1
I/O OPEN L
DST
EN CPU M CNT L
CACHE ON
TST
WAIT
MRQST 2
MRQST 3
ARITH X
DIAG INC
ARITH Y
BOOT SW L
-12

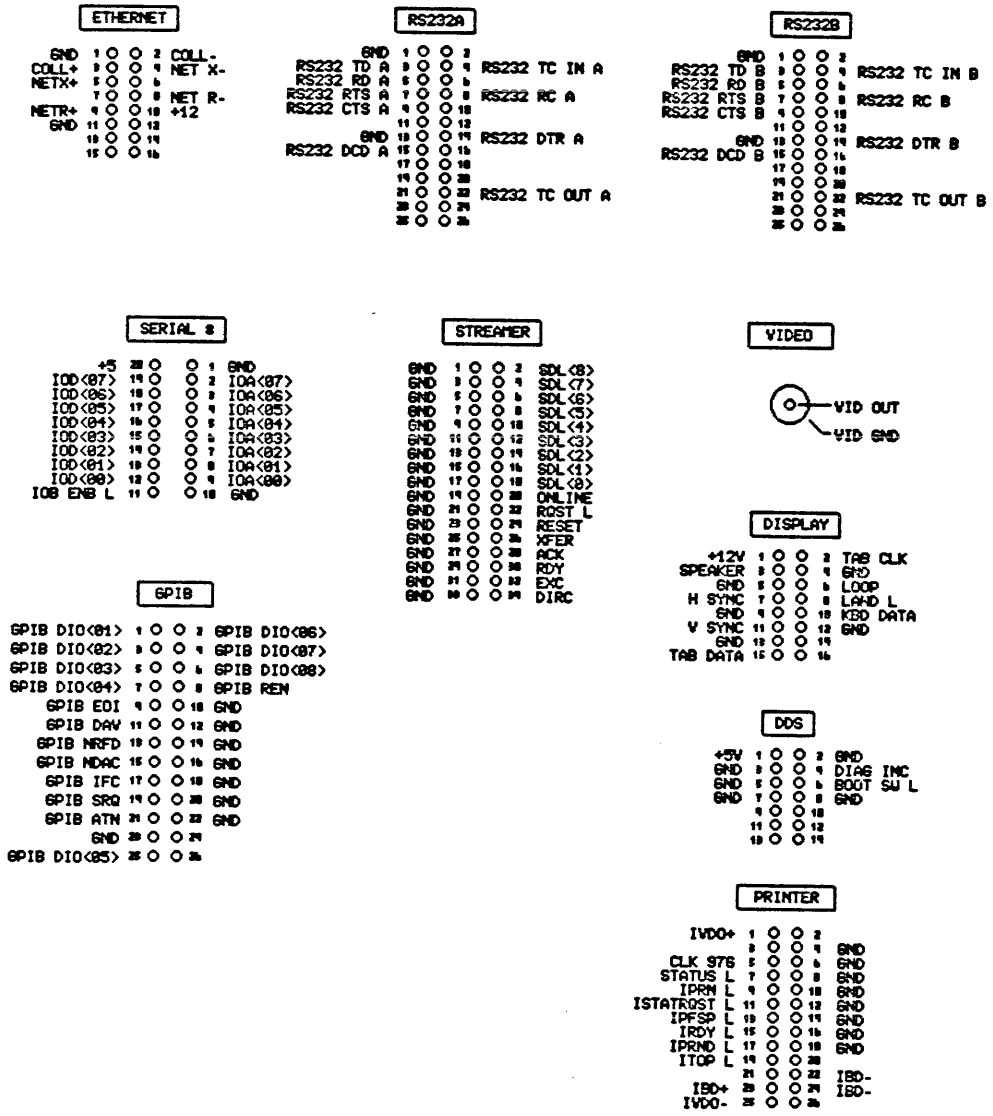
ETHERNET
GND 1 2 COLL-
COLL+ 3 4 NET X-
NETX+ 5 6
7 8 NET R-
NETR+ 9 10 +12
GND 11 12
13 14
15 16
RS232A
GND 1 2
RS232 TD A 3 4 RS232 TC IN A
RS232 RD A 5 6
RS232 RTS A 7 8 RS232 RC A
RS232 CTS A 9 10
11 12
GND 13 14 RS232 DTR A
RS232 DCD A 15 16
17 18
19 20
21 22 RS232 TC OUT A
23 24
25 26
RS232B
GND 1 2
RS232 TD B 3 4 RS232 TC IN B
RS232 RD B 5 6
RS232 RTS B 7 8 RS232 RC B
RS232 CTS B 9 10
11 12
GND 13 14 RS232 DTR B
RS232 DCD B 15 16
17 18
19 20
21 22 RS232 TC OUT B
23 24
25 26
SERIAL #
+5 28 1 GND
IOD<07> 19 2 IOA<07>
IOD<06> 18 3 IOA<06>
IOD<05> 17 4 IOA<05>
IOD<04> 16 5 IOA<04>
IOD<03> 15 6 IOA<03>
IOD<02> 14 7 IOA<02>
IOD<01> 13 8 IOA<01>
IOD<00> 12 9 IOA<00>
IOB ENB L 11 10 GND
STREAMER
GND 1 2 SDL<8>
GND 3 4 SDL<7>
GND 5 6 SDL<6>
GND 7 8 SDL<5>
GND 9 10 SDL<4>
GND 11 12 SDL<3>
GND 13 14 SDL<2>
GND 15 16 SDL<1>
GND 17 18 SDL<0>
GND 19 20 ONLINE
GND 21 22 RQST L
GND 23 24 RESET
GND 25 26 XFER
GND 27 28 ACK
GND 29 30 RDY
GND 31 32 EXC
GND 33 34 DIRC
VIDEO
VID OUT
VID GND
GPIB
GPIB DIO<01> 1 2 GPIB DIO<06>
GPIB DIO<02> 3 4 GPIB DIO<07>
GPIB DIO<03> 5 6 GPIB DIO<08>
GPIB DIO<04> 7 8 GPIB REN
GPIB EOI 9 10 GND
GPIB DAV 11 12 GND
GPIB NRFD 13 14 GND
GPIB NDAC 15 16 GND
GPIB IFC 17 18 GND
GPIB SRQ 19 20 GND
GPIB ATN 21 22 GND
GND 23 24
GPIB DIO<05> 25 26
DISPLAY
+12V 1 2 TAB CLK
SPEAKER 3 4 GND
GND 5 6 LOOP
H SYNC 7 8 LAND L
GND 9 10 KBD DATA
V SYNC 11 12 GND
GND 13 14
TAB DATA 15 16
DDS
+5V 1 2 GND
GND 3 4 DIAG INC
GND 5 6 BOOT SW L
GND 7 8 GND
9 10
11 12
13 14
PRINTER
IVDO+ 1 2
3 4 GND
CLK 976 5 6 GND
STATUS L 7 8 GND
IPRN L 9 10 GND
ISTATRQST L 11 12 GND
IPFSP L 13 14 GND
IRDY L 15 16 GND
IPRND L 17 18 GND
ITOP L 19 20
21 22 IBD-
IBD+ 23 24 IBD-
IVDO- 25 26

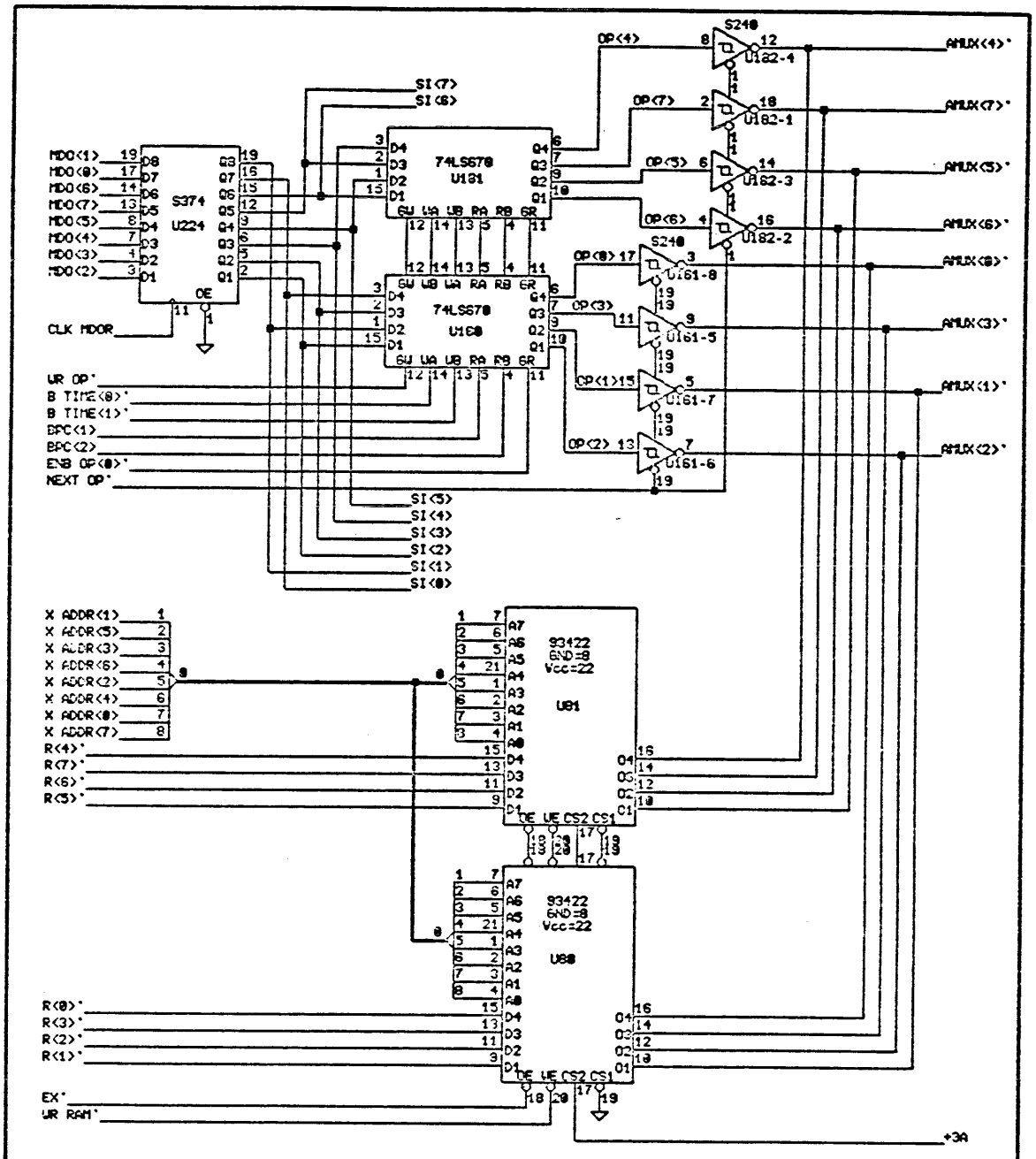

COPYRIGHT (c) 1984

THIS DOCUMENT IS NOT TO BE REPRODUCED IN ANY FORM OR TRANSMITTED IN WHOLE OR IN PART, WITHOUT PRIOR WRITTEN AUTHORIZATION OF PERQ SYSTEMS CORPORATION.

TITLE: AMUX(7:0) SOURCES

a91.db

PERQ

DESIGNED	UCH		
DRAWN	13 Aug 82 12:10:04	SDokse	
UPDATED	APR/16/84	STECK	

SIZE	CODE	IDENTIFICATION	VAR	REV
A	11	1332-	02	A

PROJ : CPU16K Version A

PAGE 1 OF 45

23 Aug 84 11:23:43 a01.real.db

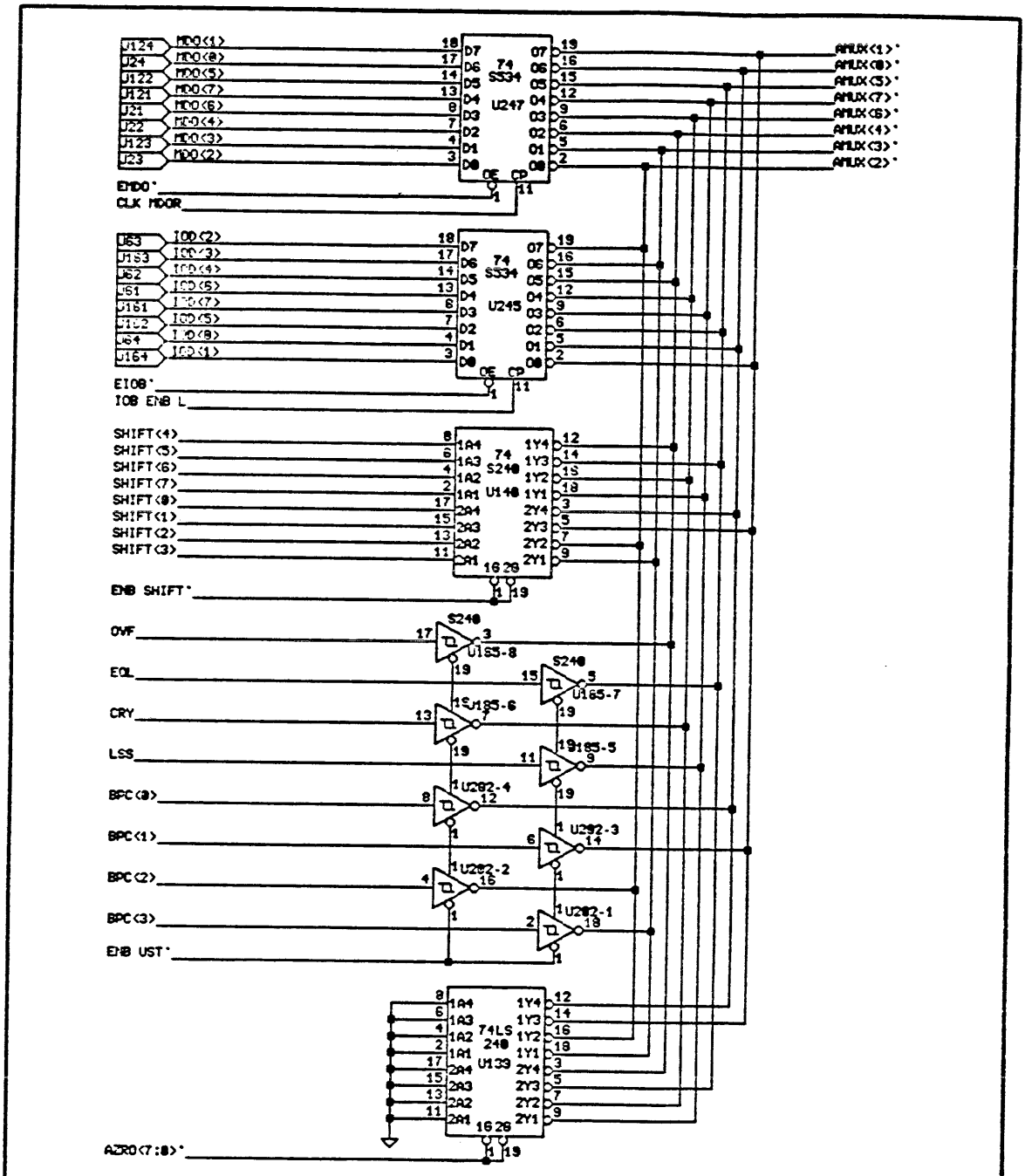

COPYRIGHT (c) 1984

THIS DOCUMENT IS NOT TO BE REPRODUCED IN ANY FORM OR TRANSMITTED IN WHOLE OR IN PART, WITHOUT PRIOR WRITTEN AUTHORIZATION OF PERQ SYSTEMS CORPORATION.

TITLE: AMUX<7:0> SOURCES

a02.db

PERQ

DESIGNED	UCH		
DRAWN	13 Aug 82 12:18:24	SBoksa	
UPDATED	APR/02/84	STECK	

SIZE	CODE	IDENTIFICATION	VAR	REV
A	11	1332 -	02	A

PROJ : CPU16K Version A

23 Aug 84 11:24:30 a02.real.db

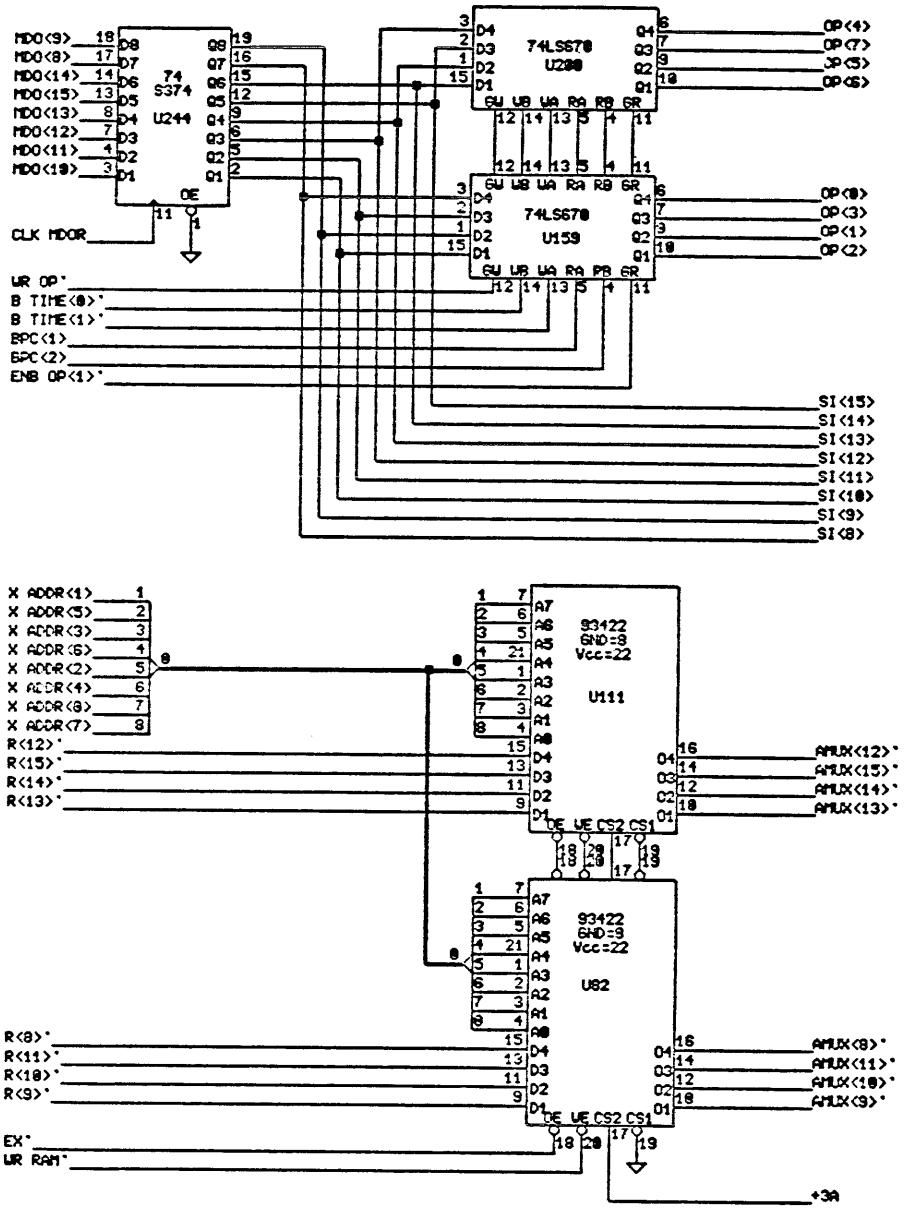

COPYRIGHT (c) 1984

THIS DOCUMENT IS NOT TO BE REPRODUCED IN ANY FORM OR TRANSMITTED IN WHOLE OR IN PART, WITHOUT PRIOR WRITTEN AUTHORIZATION OF PERQ SYSTEMS CORPORATION.

TITLE: AMUX<15:8> SOURCES

a83.db

PERQ

DESIGNED	UCH		
DRAWN	13 Aug 82 12:10:04	SEokse	
UPDATED	APR/82/84	STECK	

SIZE	CODE	IDENTIFICATION	VAR	REV
A	11	1332-	02	A

PROJ : CPU16K Version A

23 Aug 84 11:25:17 a83.real.db

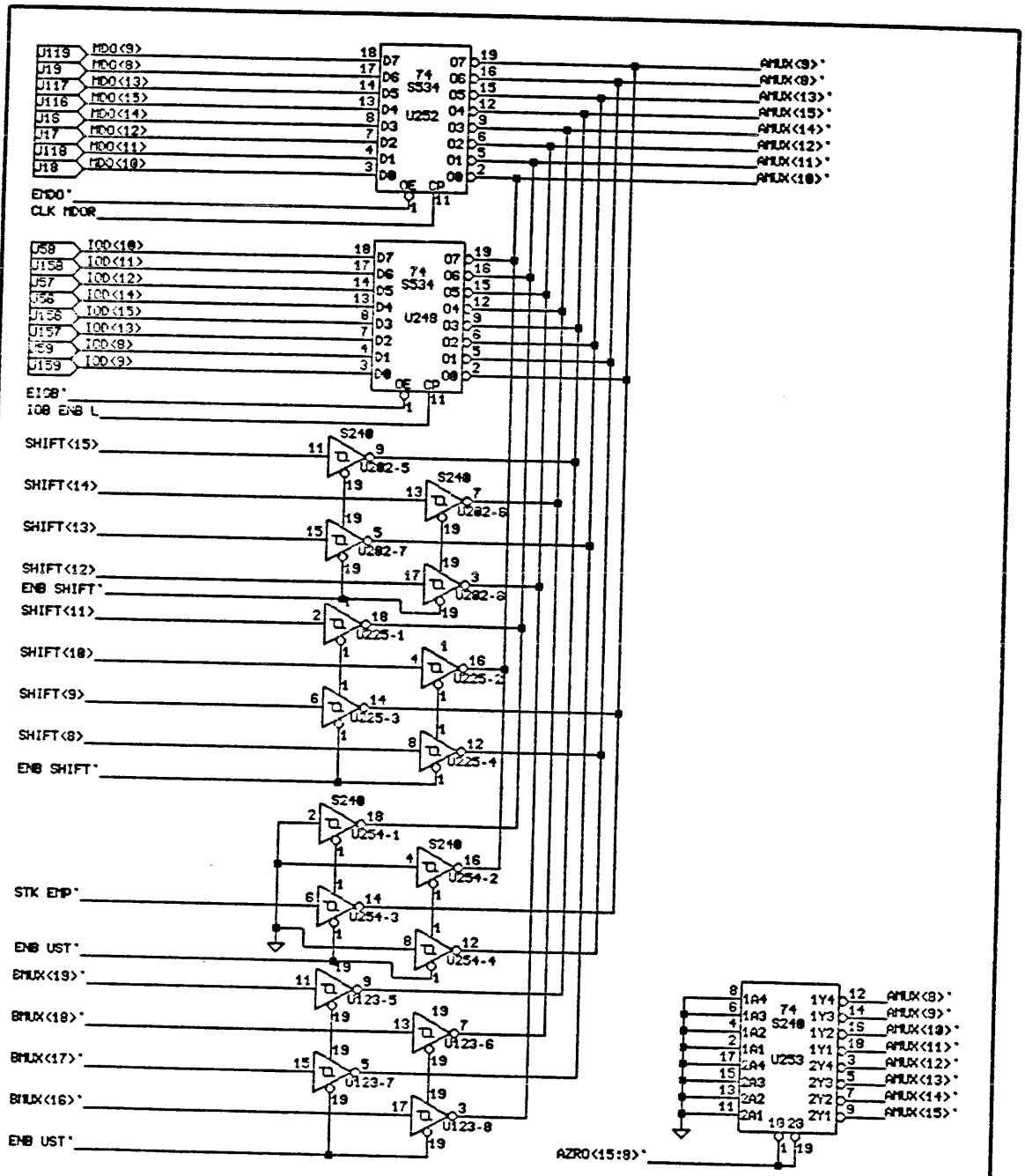

THIS DOCUMENT IS NOT TO BE REPRODUCED IN ANY FORM OR TRANSMITTED IN WHOLE OR IN PART, WITHOUT PRIOR WRITTEN AUTHORIZATION OF PERQ SYSTEMS CORPORATION.

COPYRIGHT (c) 1984

TITLE: AMUX(15:8) SOURCES

a94.db

PERQ

DESIGNED	UCH	
DRAWN	13 Aug 82 12:10:04	SBokse
UPDATED	APR/02/84	STECK

SIZE	CODE	IDENTIFICATION	VAR	REV
A	11	1332-	02	A

PROJ : CPU16K Version A

PAGE 4 OF 45

23 Aug 84 11:26:06 a94.real.db

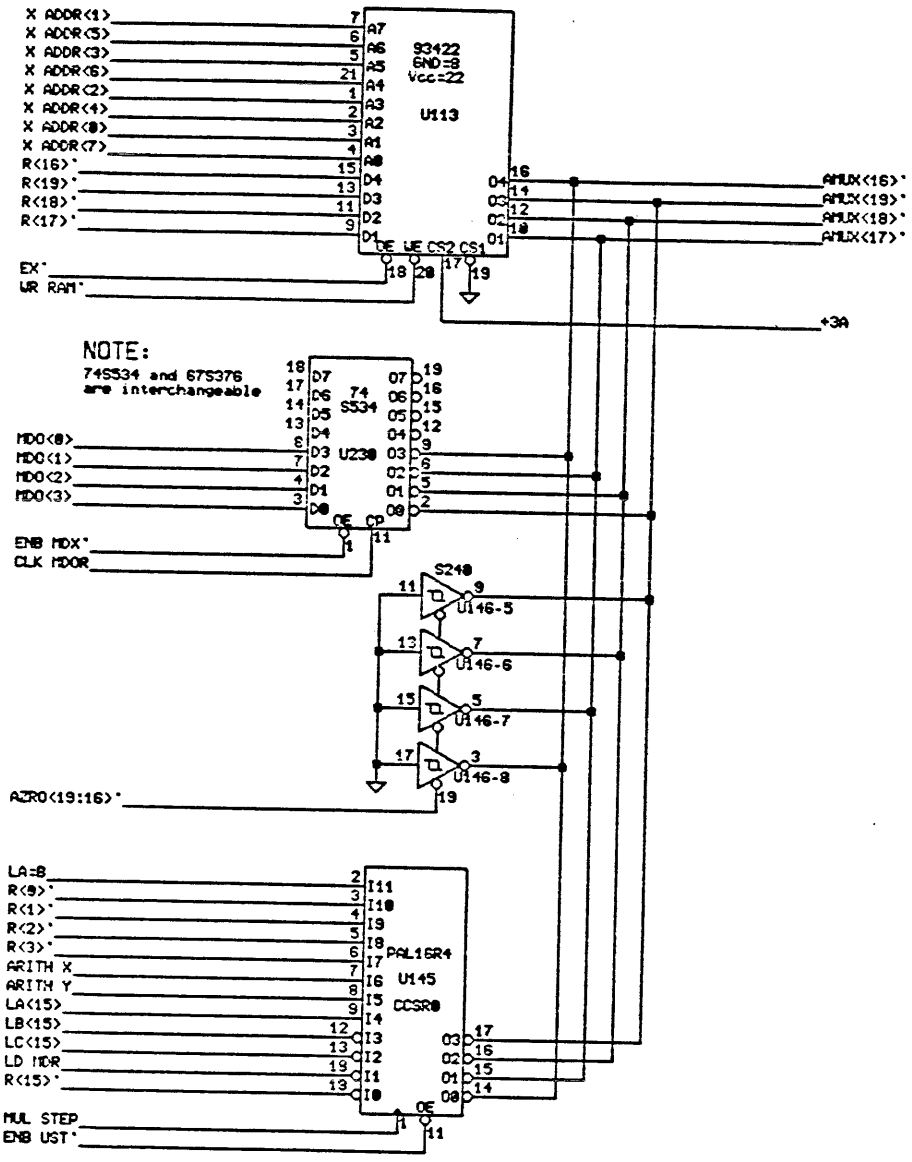

THIS DOCUMENT IS NOT TO BE REPRODUCED IN ANY FORM OR TRANSMITTED IN WHOLE OR IN PART, WITHOUT PRIOR WRITTEN AUTHORIZATION OF PERQ SYSTEMS CORPORATION.

COPYRIGHT (c) 1984

TITLE: AMUX<19:16> SOURCES

a85.db

PERQ

DESIGNED	UCH		SIZE	CODE	IDENTIFICATION	VAR	REV
DRAWN	13 Aug 82 12:10:04	SBolse	A	1 1	1 3 3 2 -	0 2	A
UPDATED	APR/02/84	STECK	PROJ :	C P U 1 6 K Version A		PAGE 5	OF 45

23 Aug 84 11:26:46 a85.real.db

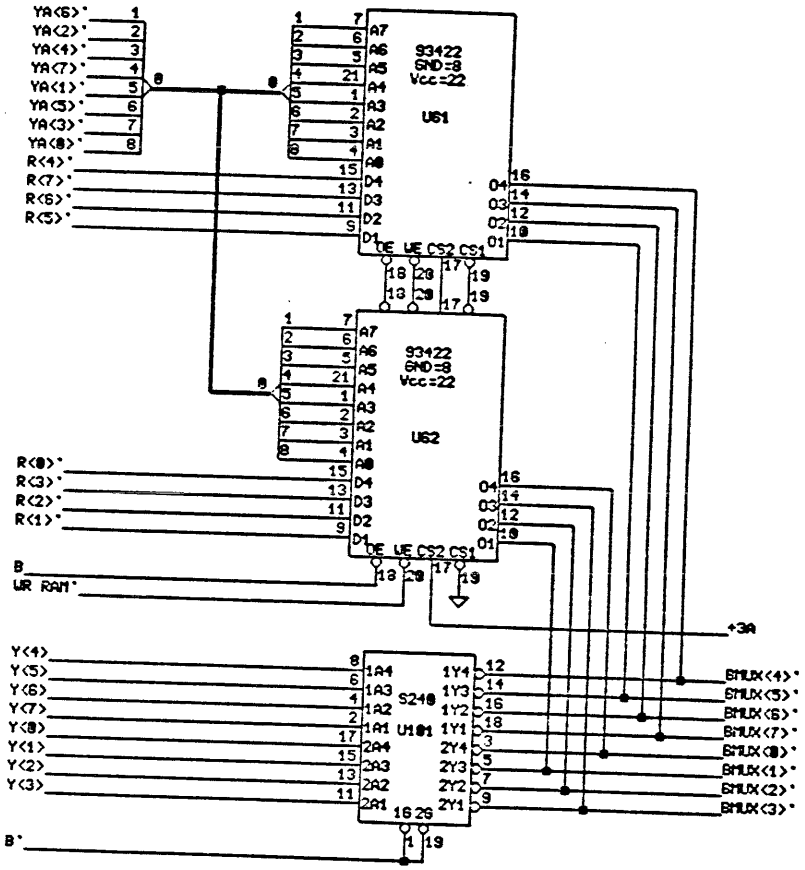

THIS DOCUMENT IS NOT TO BE REPRODUCED IN ANY FORM OR TRANSMITTED IN WHOLE OR IN PART, WITHOUT PRIOR WRITTEN AUTHORIZATION OF PERQ SYSTEMS CORPORATION.

COPYRIGHT (c) 1984

TITLE: BMUX<7:0> SOURCES

a06.db

PERQ

DESIGNED	UCH		
DRAWN	13 Aug 82 12:19:04	SBckse	
UPDATED	APR/02/84	STECK	

SIZE	CODE	IDENTIFICATION	VAR	REV
A	11	1332-	02	A

PROJ : CPU16K Version A

PAGE 6 OF 45

23 Aug 84 11:27:24 a06.real.db

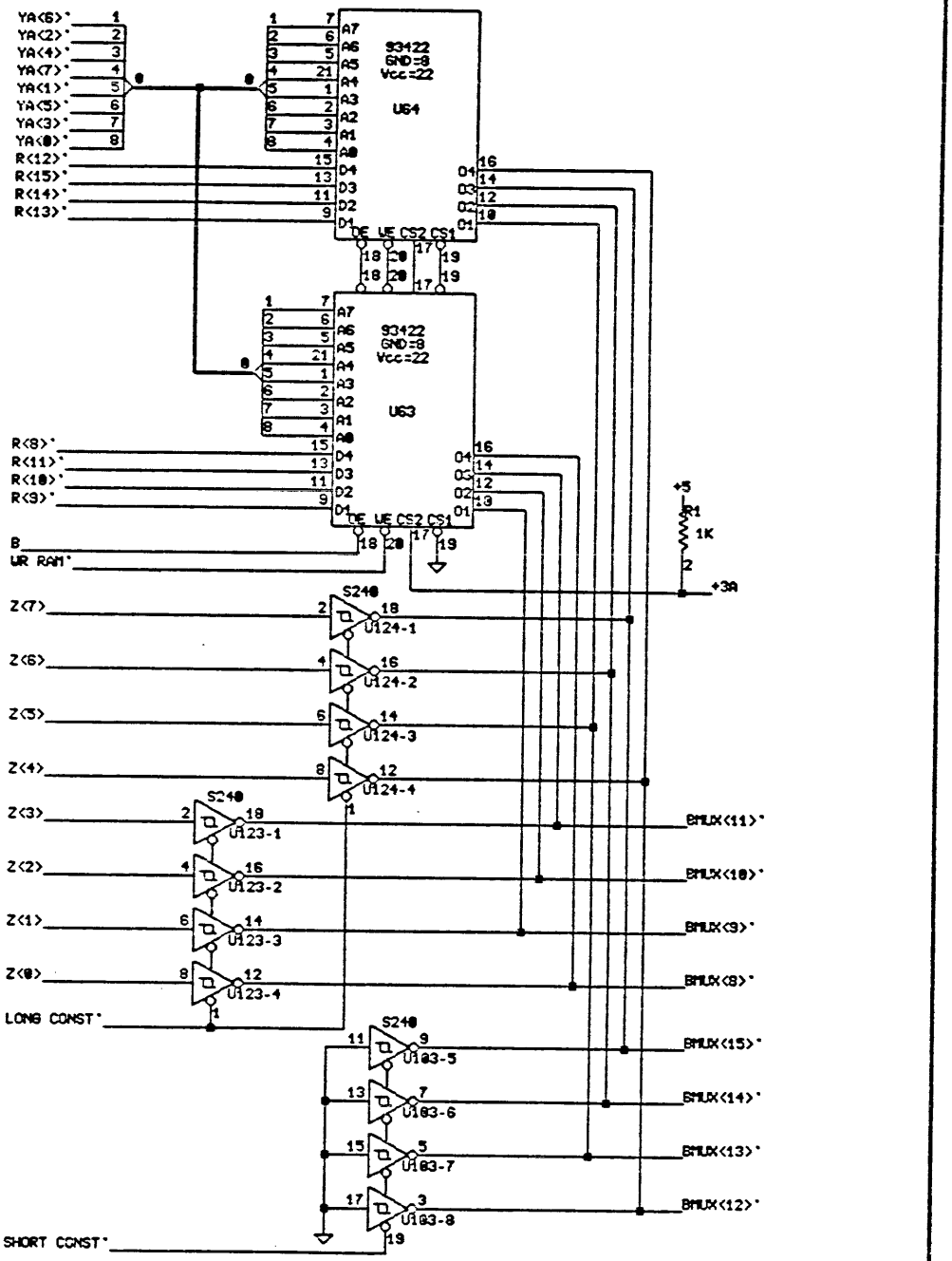

COPYRIGHT (c) 1984

THIS DOCUMENT IS NOT TO BE REPRODUCED IN ANY FORM OR TRANSMITTED IN WHOLE OR IN PART, WITHOUT PRIOR WRITTEN AUTHORIZATION OF PERQ SYSTEMS CORPORATION.

TITLE: BMUX<15:7> SOURCES

a07.dp

PERQ

DESIGNED	UCH		SIZE	CODE	IDENTIFICATION	VAR	REV
DRAWN	13 Aug 82 12:10:04	SBokse	A	11	1332-	02	A
UPDATED	APR/02/84	STECK	PROJ :	CPU16K Version A		PAGE 7	OF 45

23 Aug 84 11:28:07 a07.real.dp

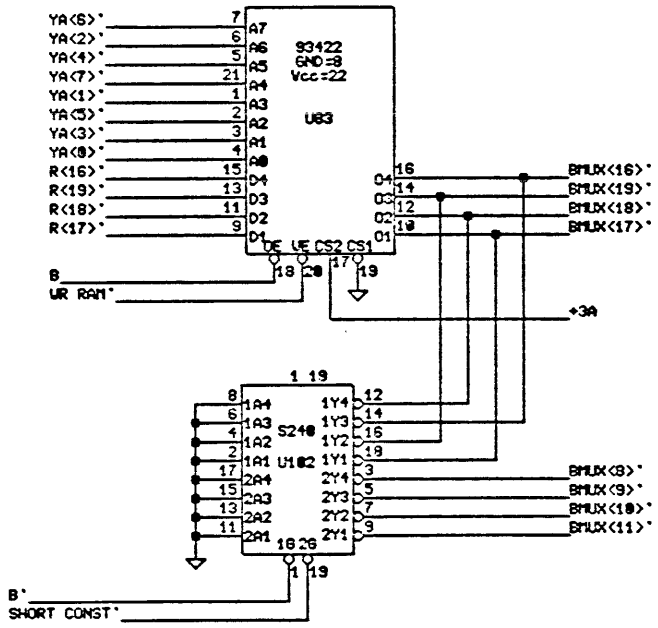

COPYRIGHT (c) 1984

THIS DOCUMENT IS NOT TO BE REPRODUCED IN ANY FORM OR TRANSMITTED IN WHOLE OR IN PART, WITHOUT PRIOR WRITTEN AUTHORIZATION OF PERQ SYSTEMS CORPORATION.

TITLE	BMUX<19:16> SOURCES						a08.db	
PERQ	DESIGNED	UCH		SIZE	CODE	IDENTIFICATION	VAR	REV
	DRAWN	13 Aug 82 12:10:04	SBokse	A	11	1332-	02	A
	UPDATED	APR/02/84	STECK	PROJ :	CPU16K Version A		PAGE 8 OF 45	

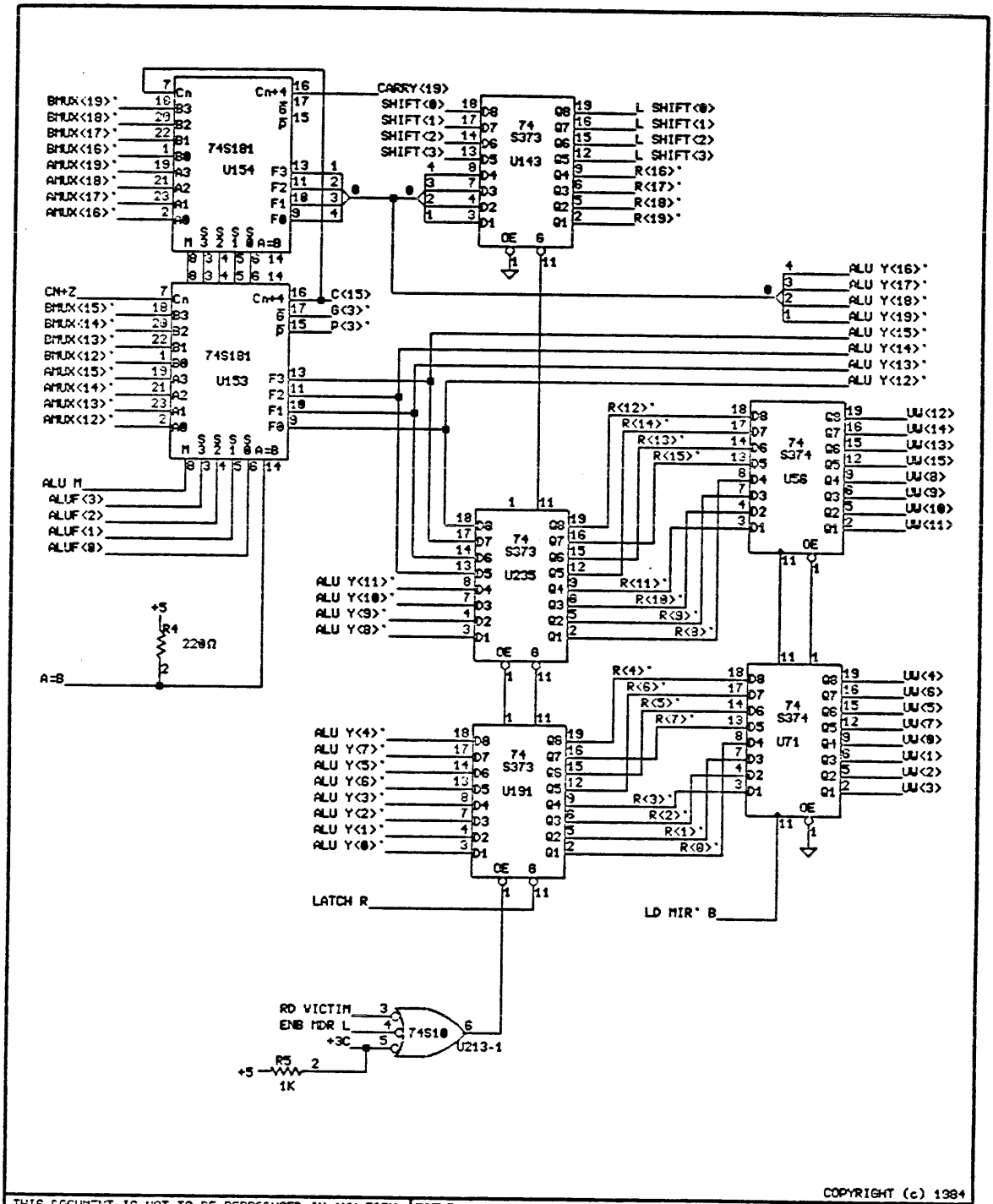

COPYRIGHT (c) 1984

THIS DOCUMENT IS NOT TO BE REPRODUCED IN ANY FORM OR TRANSMITTED IN WHOLE OR IN PART, WITHOUT PRIOR WRITTEN AUTHORIZATION OF PERQ SYSTEMS CORPORATION.

TITLE	ALU						a09.db	
PERQ	DESIGNED	UCH		SIZE	CODE	IDENTIFICATION	VAR	REV
	DRAWN	13 Aug 82 12:19:04	SBokse	A	11	1332-	02	A
	UPDATED	APR/16/84	STECK	PROJ : CPU16K Version A			PAGE 9	OF 45

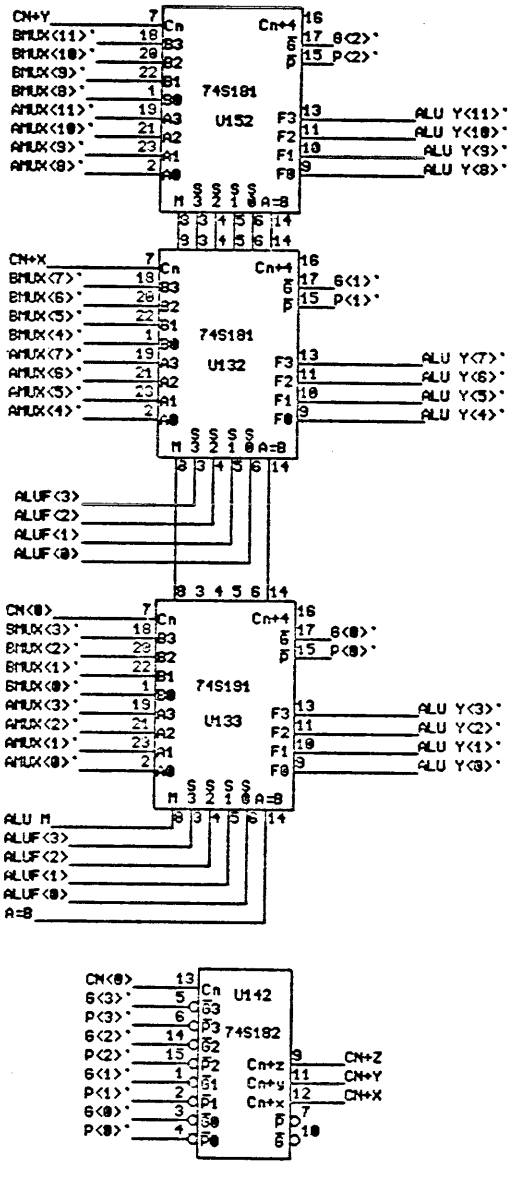

COPYRIGHT (c) 1984

THIS DOCUMENT IS NOT TO BE REPRODUCED IN ANY FORM OR TRANSMITTED IN WHOLE OR IN PART, WITHOUT PRIOR WRITTEN AUTHORIZATION OF PERQ SYSTEMS CORPORATION.

PERQ	TITLE: ALU					a10.db	
	DESIGNED:	UCH		SIZE: A	CODE: 11	IDENTIFICATION: 1332-	VAR: 02	REV: A
	DRAWN:	13 Aug 82 12:10:04	SBckse					
	UPDATED:	APR/02/84	STECK	PROJ : CPU16K Version A			PAGE 10 OF 45	

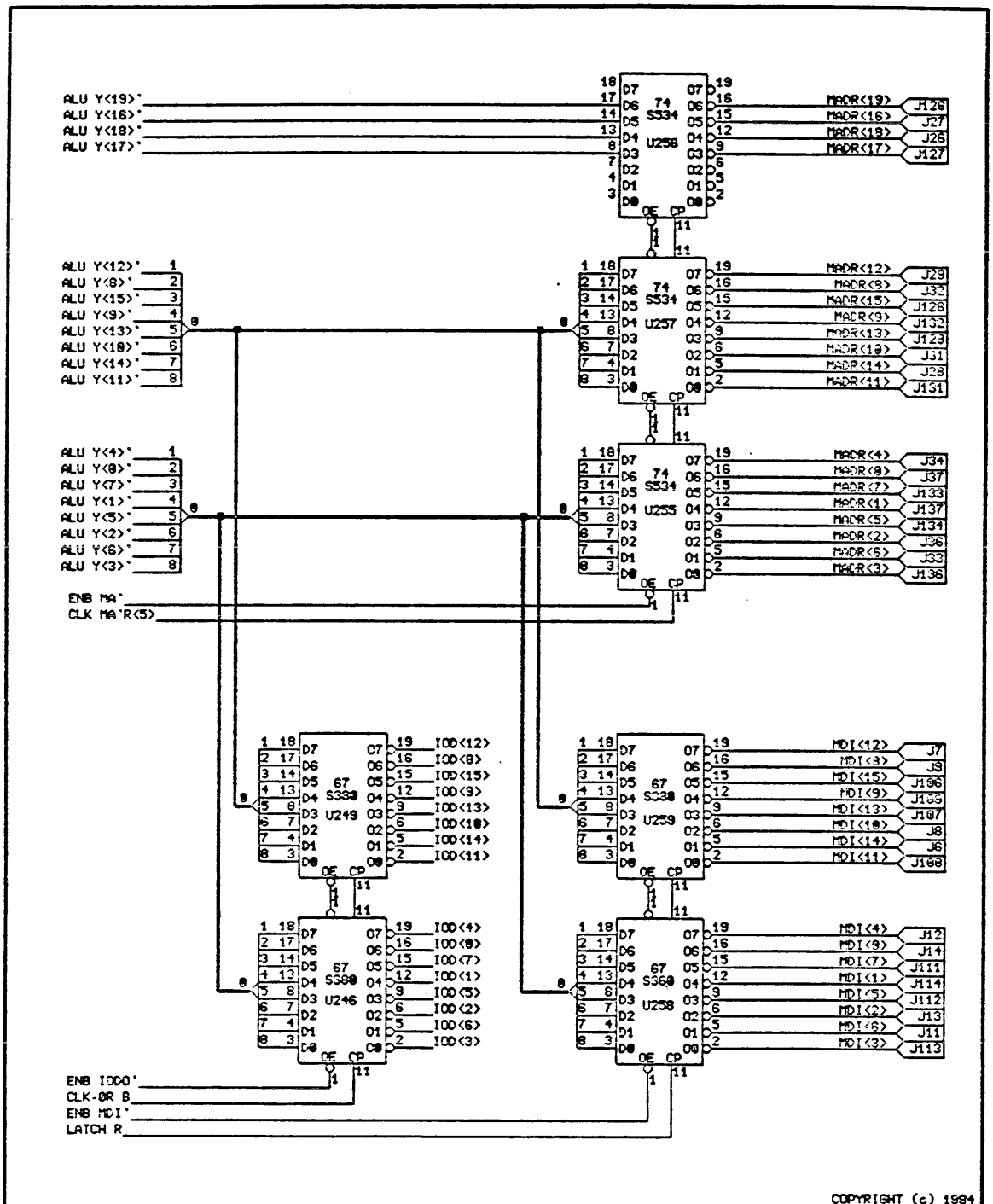

COPYRIGHT (c) 1984

THIS DOCUMENT IS NOT TO BE REPRODUCED IN ANY FORM OR TRANSMITTED IN WHOLE OR IN PART, WITHOUT PRIOR WRITTEN AUTHORIZATION OF PERQ SYSTEMS CORPORATION.

TITLE: ALU MEMORY BUS INTERFACE

a11.db

PERQ

DESIGNED	UCH	
DRAWN	13 Aug 84 12:11:04	SBakse
UPDATED	APR/02/84	STECK

SIZE	CODE	IDENTIFICATION	VAR	REV
A	11	1332-	02	A

PROJ : CPU16K Version A

PAGE 11 OF 45

23 Aug 84 11:31:13 a11.real.db

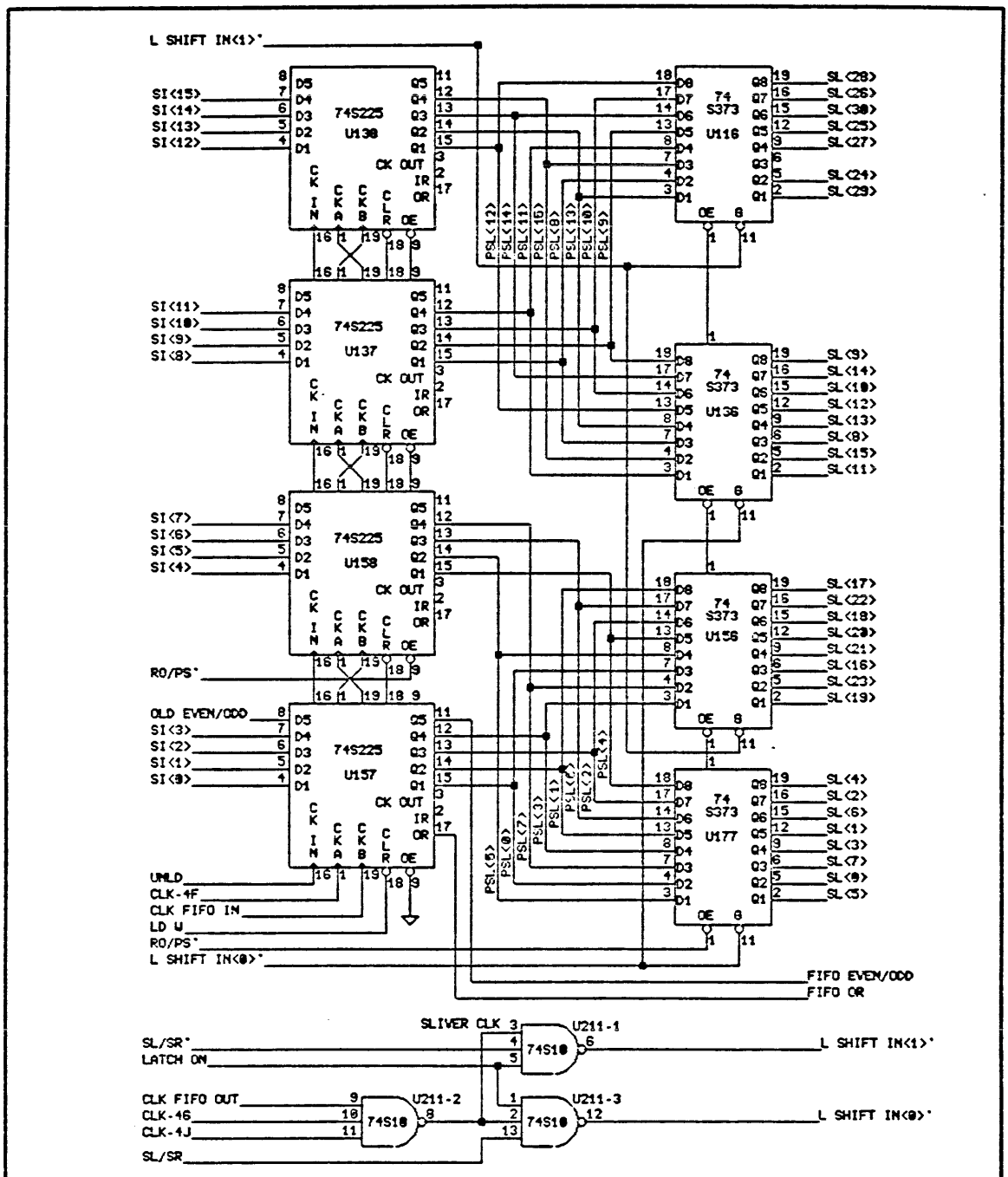

COPYRIGHT (c) 1984

THIS DOCUMENT IS NOT TO BE REPRODUCED IN ANY FORM OR TRANSMITTED IN WHOLE OR IN PART, WITHOUT PRIOR WRITTEN AUTHORIZATION OF PERQ SYSTEMS CORPORATION.

TITLE: SHIFTER

a12.dp

PERQ

DESIGNED	UCH		SIZE	CODE	IDENTIFICATION	VAR	REV
DRAWN	13 Aug 82 12:10:04	SBokse	A	1 1	1 3 3 2 -	0 2	A
UPDATED	APR/06/84	STECK	PROJ : C P U 1 6 K Version A			PAGE 12 OF 45	

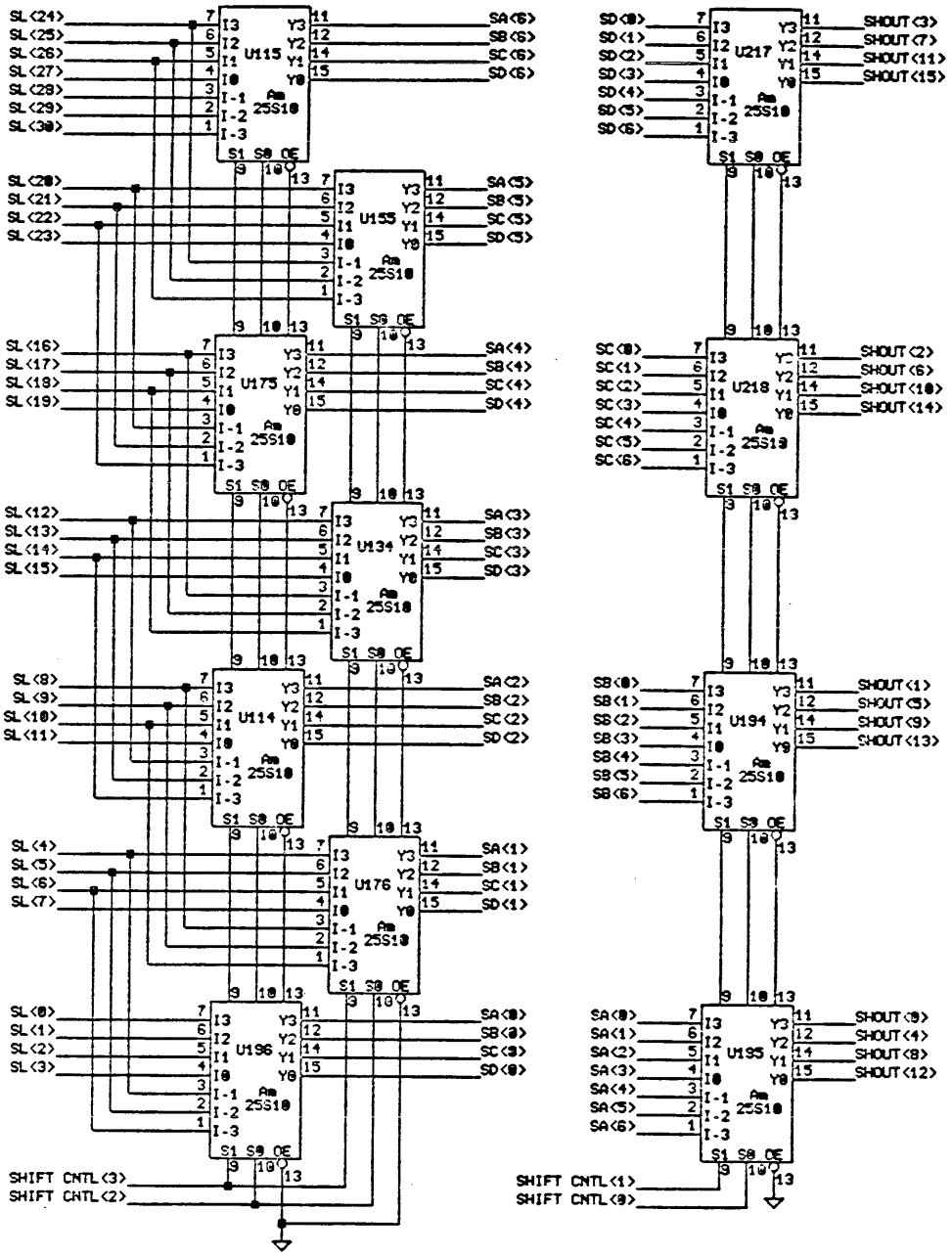

COPYRIGHT (c) 1984

THIS DOCUMENT IS NOT TO BE REPRODUCED IN any FORM OR TRANSMITTED IN WHOLE OR IN PART, WITHOUT PRIOR WRITTEN AUTHORIZATION OF PERQ SYSTEMS CORPORATION.

TITLE: SHIFTER

a13.db

PERQ

DESIGNED	UCH		
DRAWN	13 Aug 82 12:10:04	SBokse	
UPDATED	APR/02/84	STECK	

SIZE	CODE	IDENTIFICATION	VAR	REV
A	11	1332-	02	A

PROJ : CPU16K Version A

PAGE 13 OF 45

23 Aug 84 11:33:10 a13.real.db

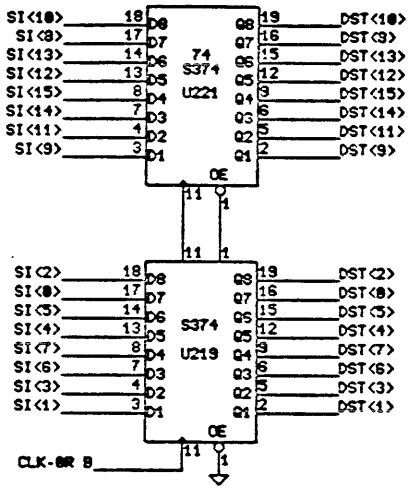

COPYRIGHT (c) 1984

THIS DOCUMENT IS NOT TO BE REPRODUCED IN ANY FORM OR TRANSMITTED IN WHOLE OR IN PART, WITHOUT PRIOR WRITTEN AUTHORIZATION OF PERQ SYSTEMS CORPORATION.

TITLE: RASTER OP REGISTER

a14.dp

PERQ

DESIGNED	UCH		SIZE	CODE	IDENTIFICATION	VAR	REV
DRAWN	13 Aug 82 12:10:34	SBokse	A	1 1	1 3 3 2 -	0 2	A
UPDATED	APR/02/84	STECK	PROJ :	C P U 1 6 K Version A		PAGE 14 OF 45	

23 Aug 84 11:33:44 a14.real.dp

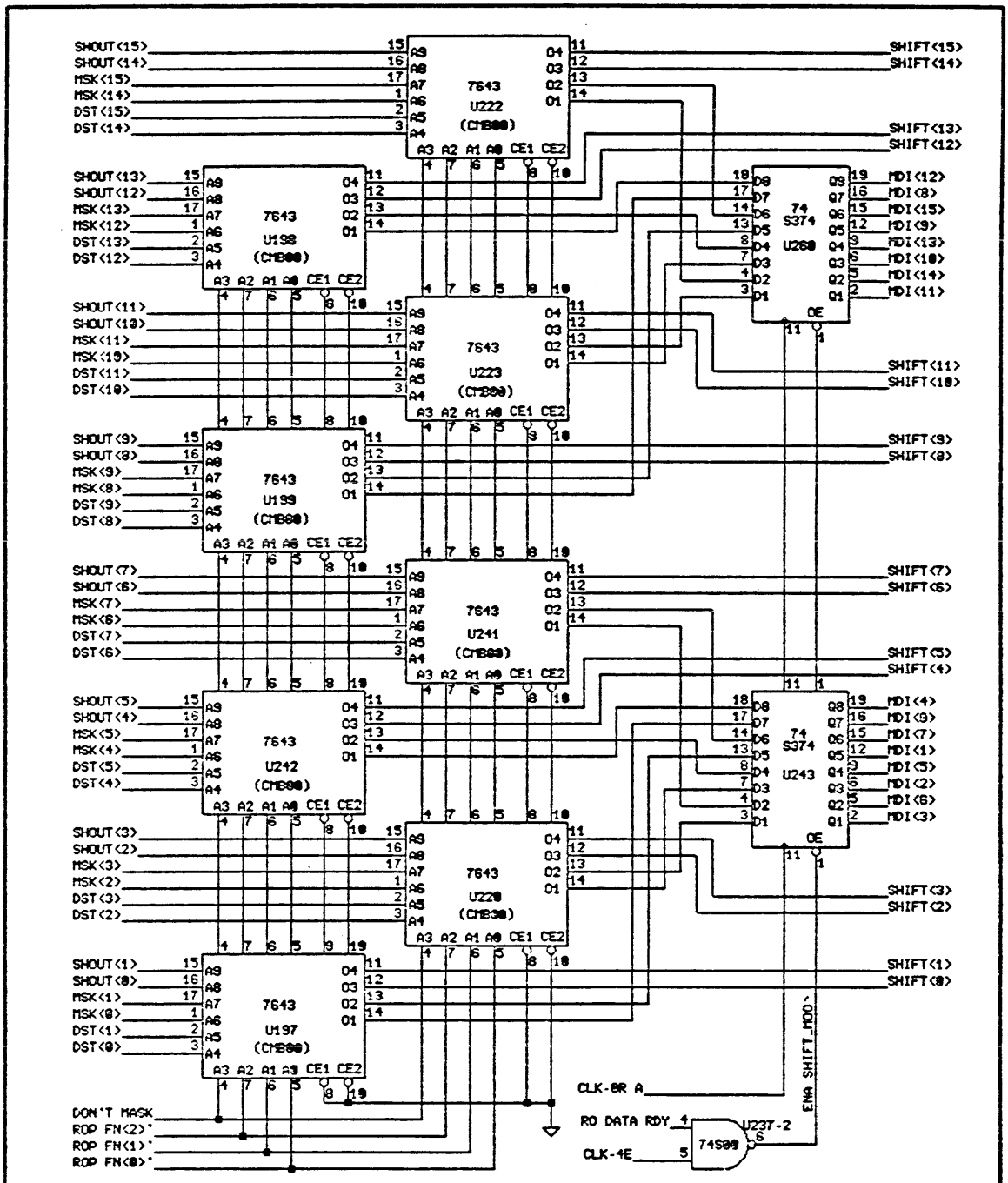

COPYRIGHT (c) 1984

THIS DOCUMENT IS NOT TO BE REPRODUCED IN ANY FORM OR TRANSMITTED IN WHOLE OR IN PART, WITHOUT PRIOR WRITTEN AUTHORIZATION OF PERQ SYSTEMS CORPORATION.

TITLE: SHIFTER- COMBINER

a15.db

PERQ

DESIGNED			
DRAWN	13 Aug 82 12:12:04	SBakse	
UPDATED	APR/02/84	STECK	

SIZE	CODE	IDENTIFICATION	VAR	REV
A	11	1332-	02	A

PROJ : CPU16K Version A

23 Aug 84 11:34:45 a15.real.db

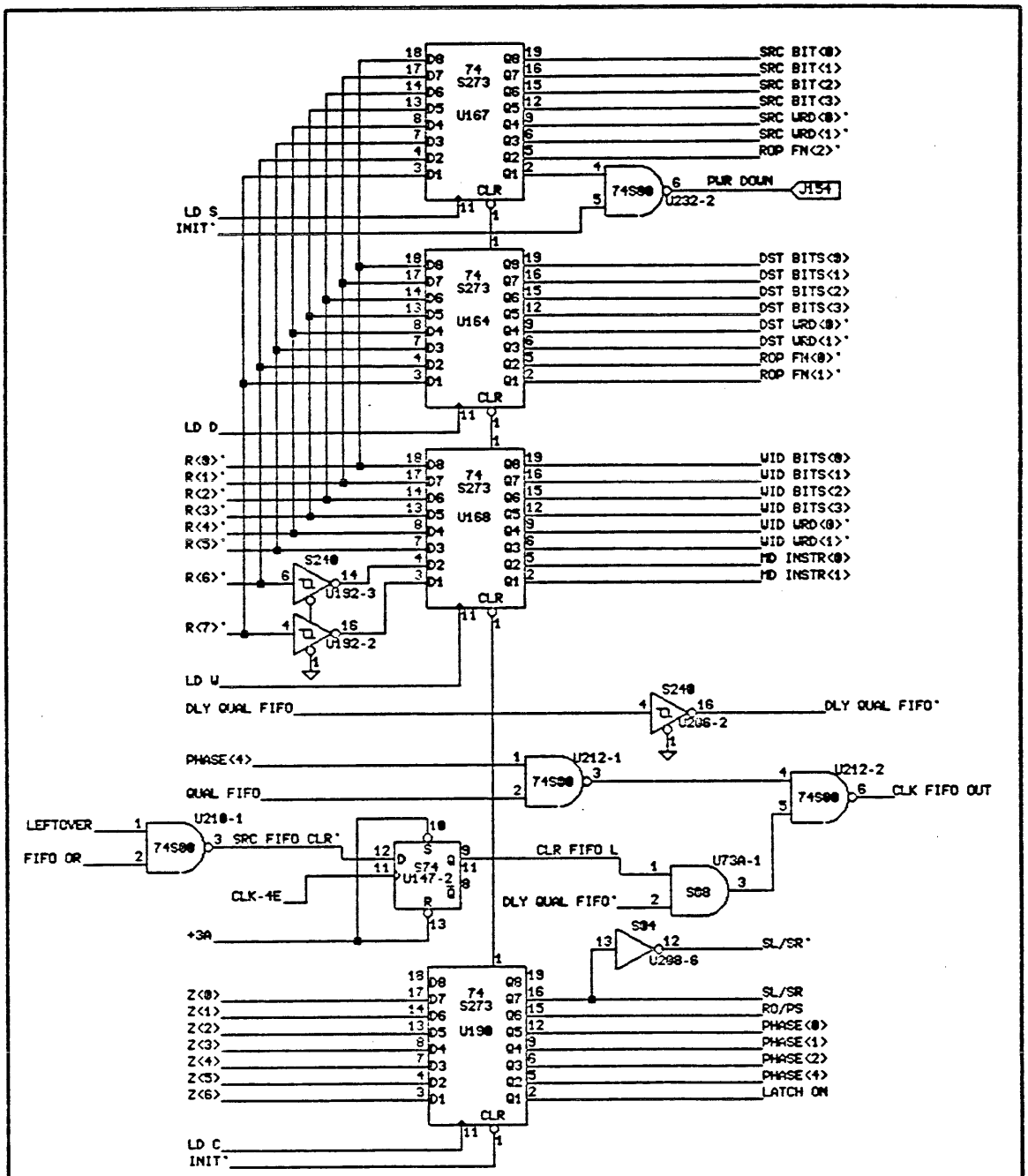

COPYRIGHT (c) 1984

THIS DOCUMENT IS NOT TO BE REPRODUCED IN ANY FORM OR TRANSMITTED IN WHOLE OR IN PART, WITHOUT PRIOR WRITTEN AUTHORIZATION OF PERQ SYSTEMS CORPORATION.

TITLE: RASTER OP CONTROL REGISTER

a16.dp

PERQ

DESIGNED	UCH		SIZE	CODE	IDENTIFICATION	VAR	REV
DRAWN	13 Aug 82 12:19:04	SBokse	A	11	1332-	02	A
UPDATED	APR/16/84	STECK	PROJ : CPU16K Version A			PAGE 16 OF 45	

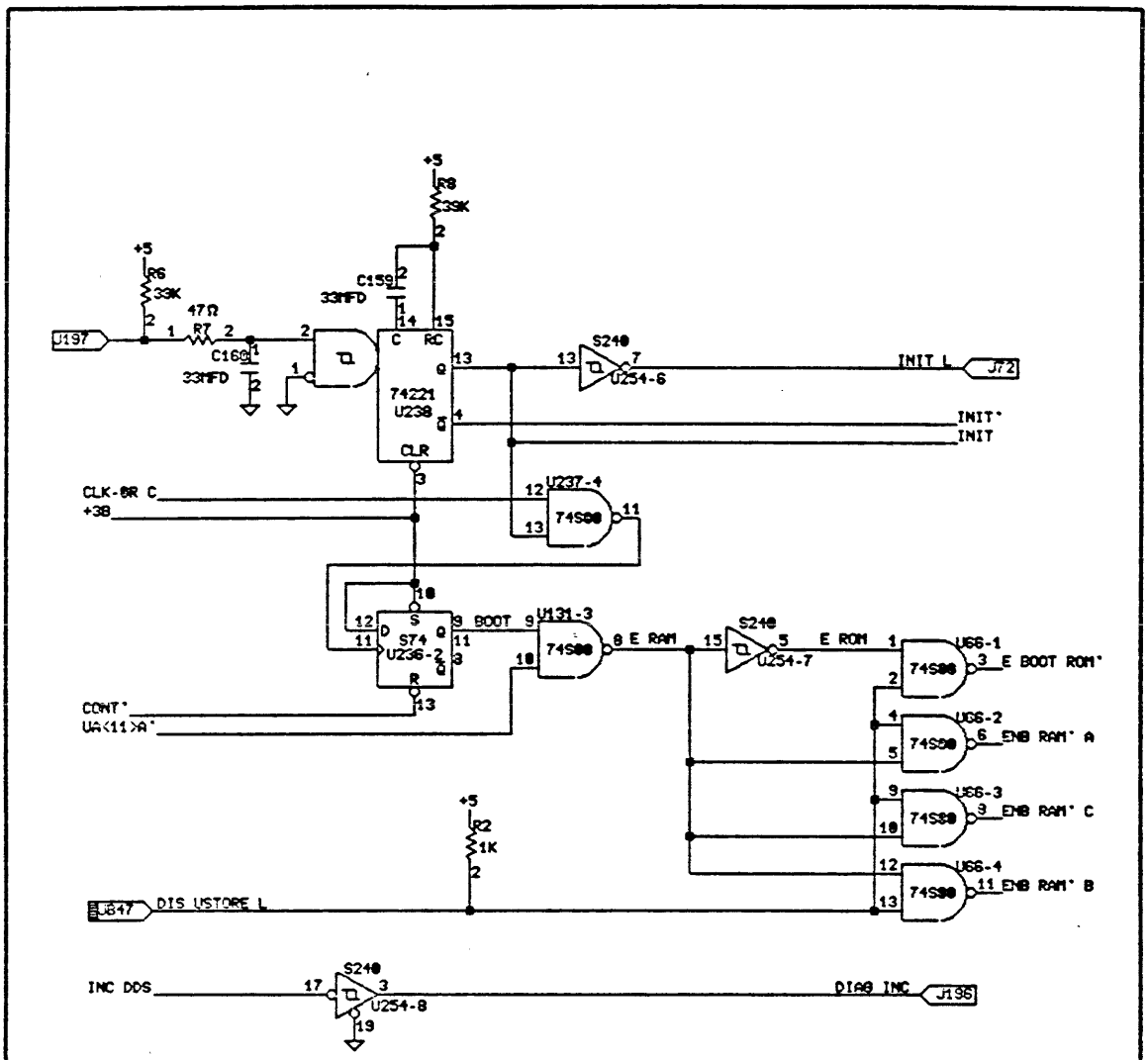

COPYRIGHT (c) 1984

THIS DOCUMENT IS NOT TO BE REPRODUCED IN ANY FORM OR TRANSMITTED IN WHOLE OR IN PART, WITHOUT PRIOR WRITTEN AUTHORIZATION OF PERQ SYSTEMS CORPORATION.

TITLE			
BOOT			a17.dp

PERQ

DESIGNED	UCH		SIZE	CODE	IDENTIFICATION	VAR	REV
DRAWN	13 Aug 82 12:18:04	SBokse	A	11	1332-	02	B
UPDATED	APR/24/84	STECK	PROJ : CPU16K Version A			PAGE 17 OF 45	

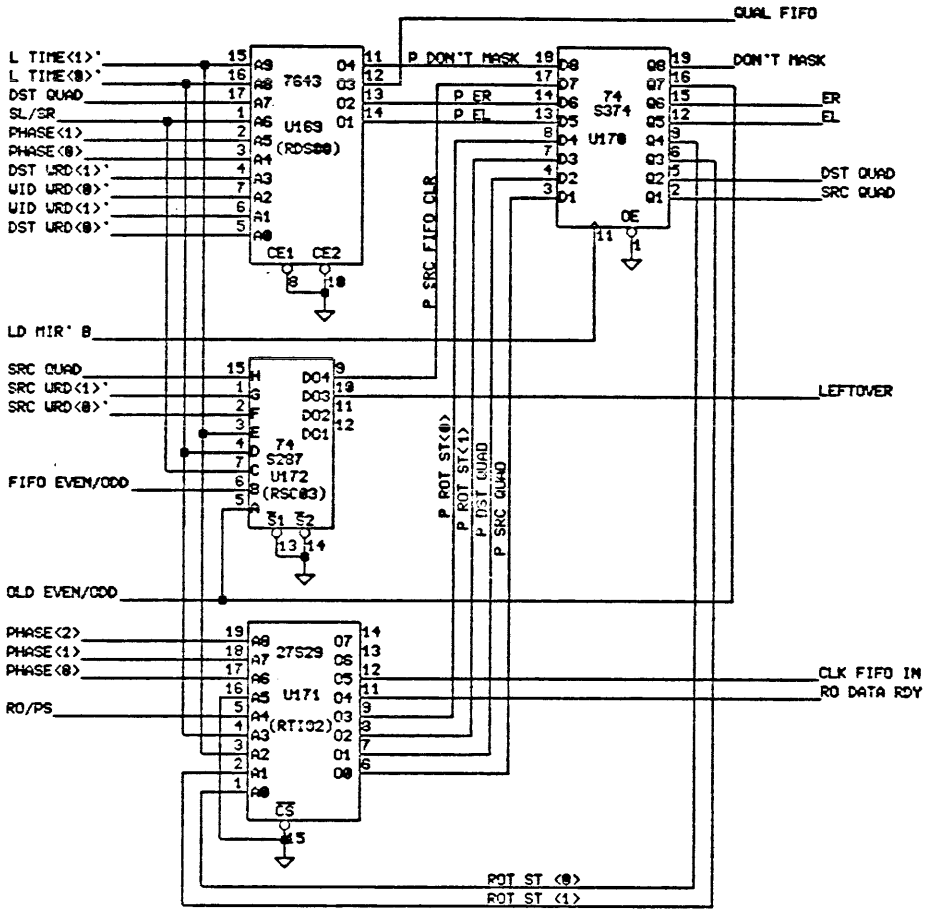

COPYRIGHT (c) 1984

THIS DOCUMENT IS NOT TO BE REPRODUCED IN ANY FORM OR TRANSMITTED IN WHOLE OR IN PART, WITHOUT PRIOR WRITTEN AUTHORIZATION OF PERQ SYSTEMS CORPORATION.

PERQ	TITLE	RASTER OP STATE MACHINE					a18.dp	
	DESIGNED	UCH		SIZE	CODE	IDENTIFICATION	VAR	REV
	DRAWN	13 Aug 82 12:10:04	SBokse	A	11	1332-	02	A
	UPDATED	APR/02/84	STECK	PROJ :	CPU16K Version A		PAGE 18 OF 45	

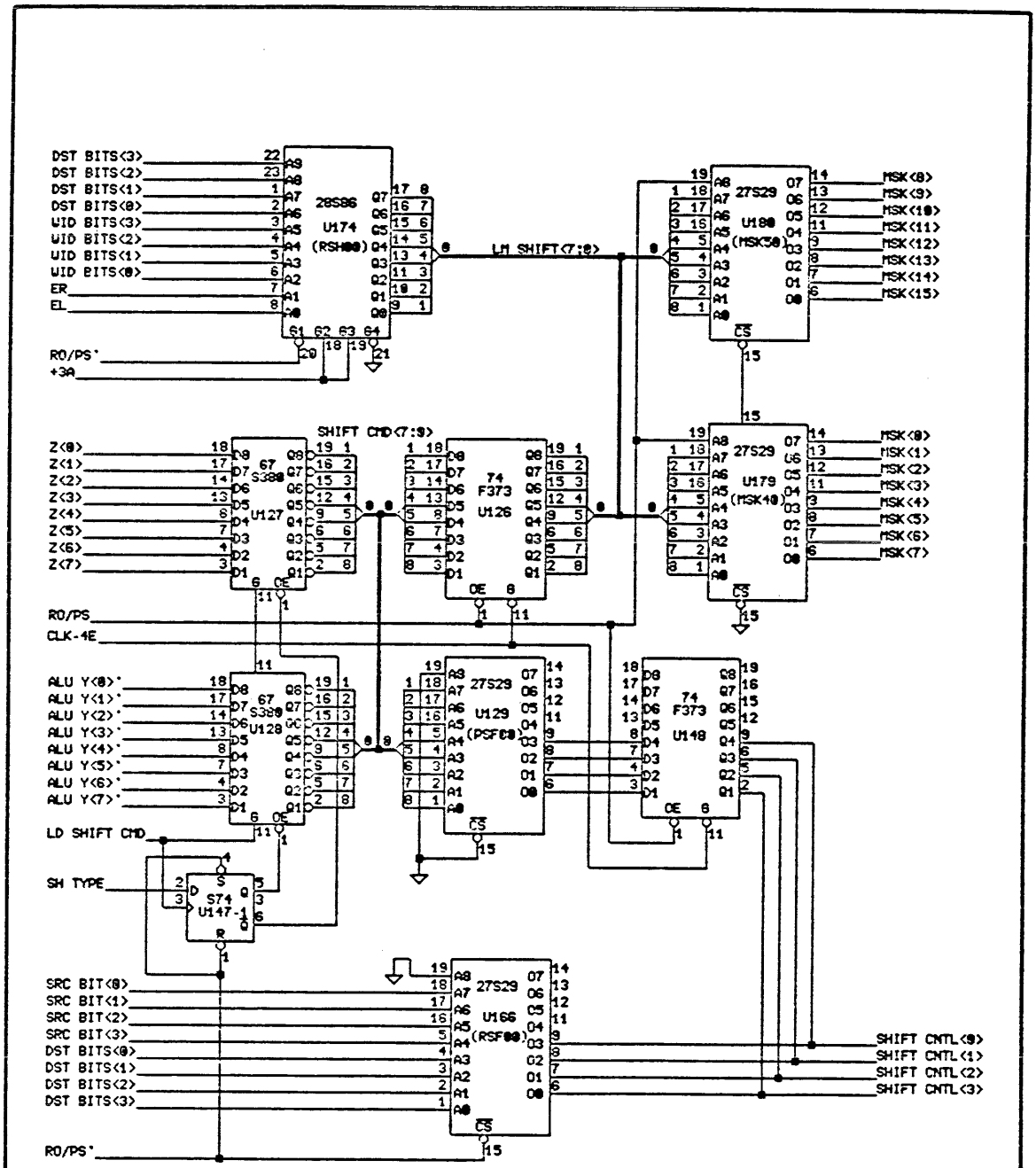

COPYRIGHT (c) 1984

THIS DOCUMENT IS NOT TO BE REPRODUCED IN ANY FORM OR TRANSMITTED IN WHOLE OR IN PART, WITHOUT PRIOR WRITTEN AUTHORIZATION OF PERQ SYSTEMS CORPORATION.

TITLE: SHIFTER MASK CONTROL

a19.db

PERQ

DESIGNED	LCH		
DRAWN	13 Aug 82 12:13:04	SBckse	
UPDATED	APR/02/84	STECK	

SIZE	CODE	IDENTIFICATION	VAR	REV
A	11	1332-	02	A

PROJ : CPU16K Version A

23 Aug 84 11:37:47 a19.real.db

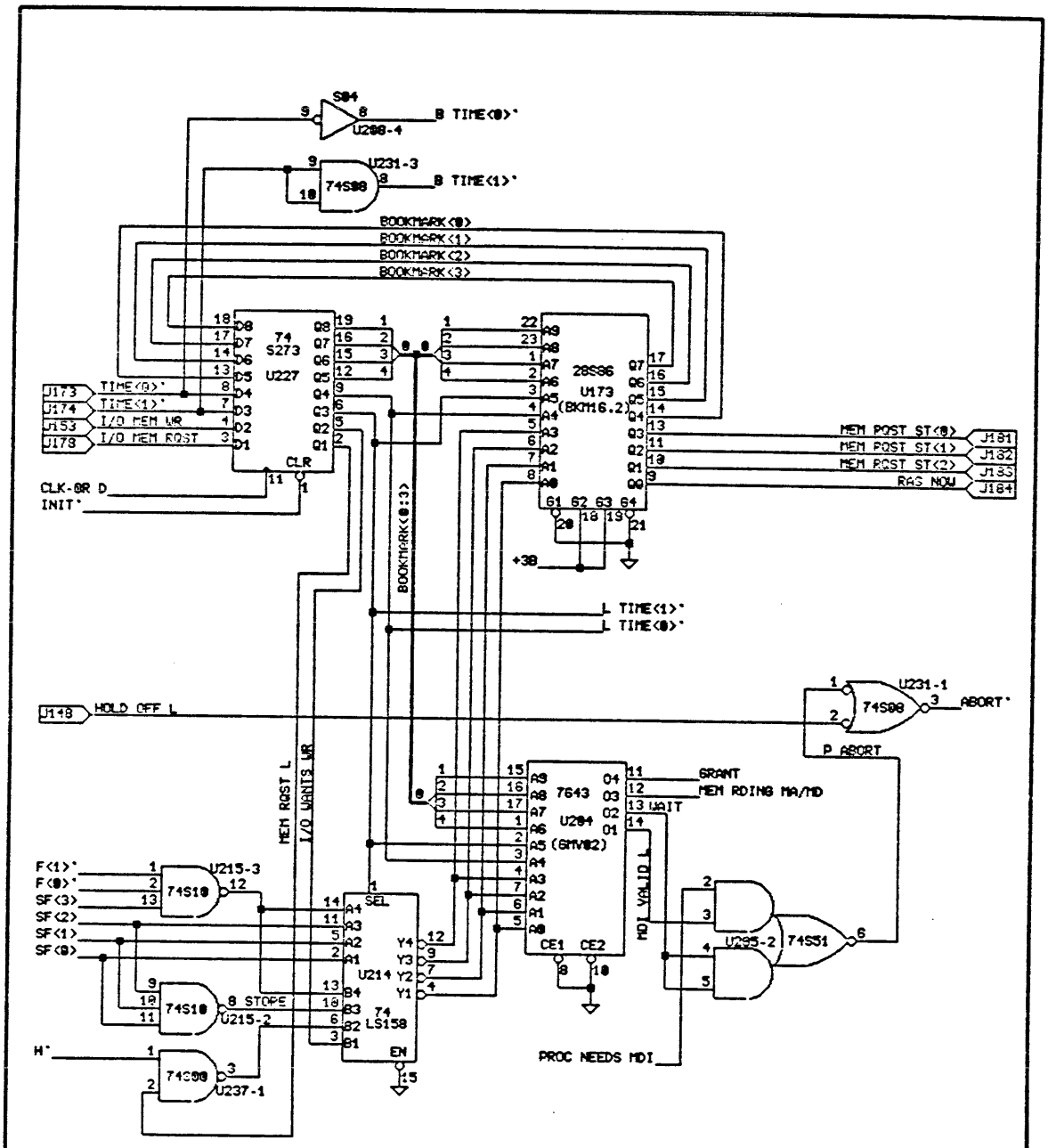

COPYRIGHT (c) 1984

THIS DOCUMENT IS NOT TO BE REPRODUCED IN ANY FORM OR TRANSMITTED IN WHOLE OR IN PART, WITHOUT PRIOR WRITTEN AUTHORIZATION OF PERQ SYSTEMS CORPORATION.

TITLE: CPU MEMSTATE MACHINE

a20.dp

PERQ

DESIGNED	WCH		
DRAWN	13 Aug 82 12:10:04	SBokse	
UPDATED	APR/16/84	STECK	

SIZE	CODE	IDENTIFICATION	WAR	REV
A	11	1332-	02	A

PROJ : CPU16K Version A

PAGE 20 OF 45

23 Aug 84 11:38:41 a20.real.dp

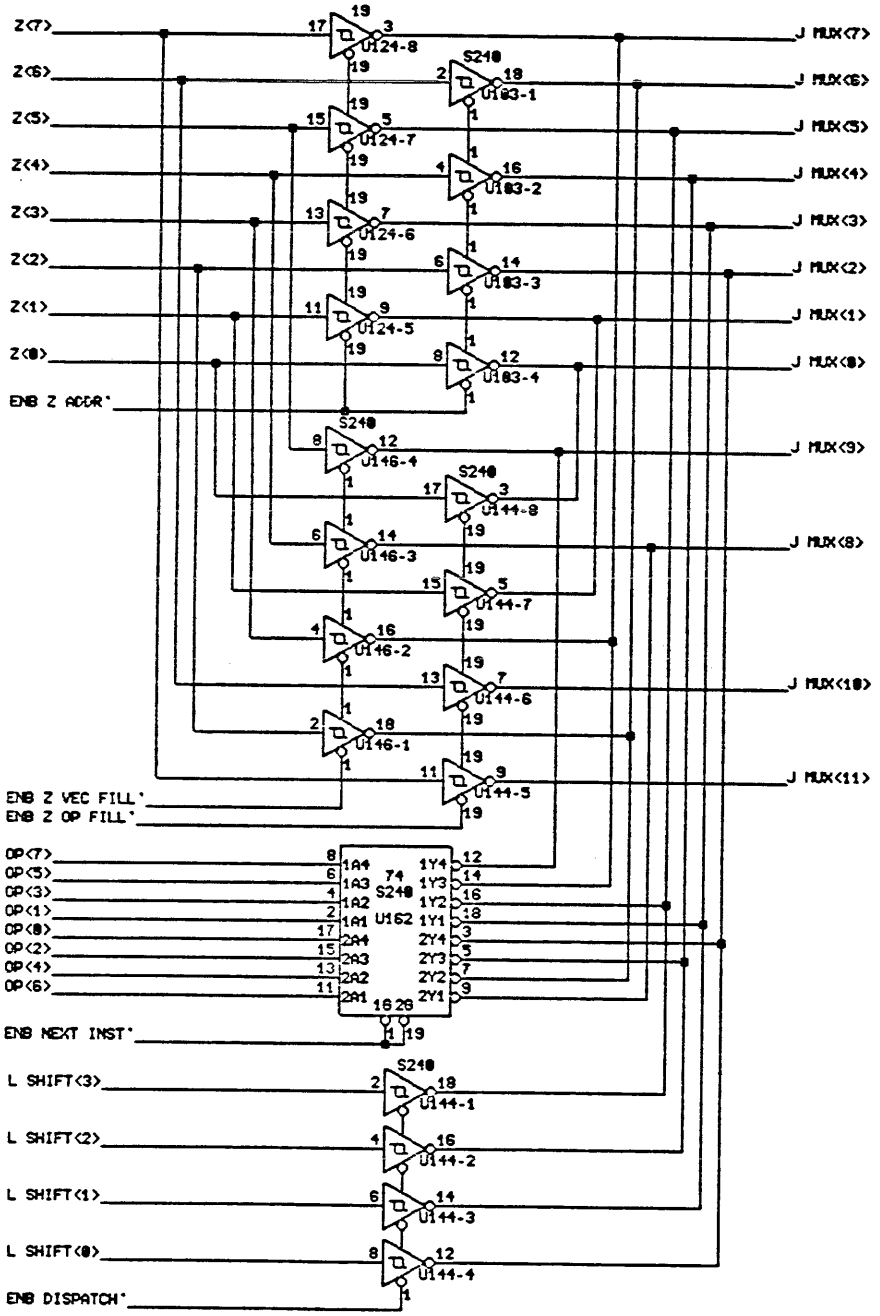

COPYRIGHT (c) 1984

THIS DOCUMENT IS NOT TO BE REPRODUCED IN ANY FORM OR TRANSMITTED IN WHOLE OR IN PART, WITHOUT PRIOR WRITTEN AUTHORIZATION OF PERQ SYSTEMS CORPORATION.

TITLE: JMUX<11:0> SOURCES

a21.db

PERQ

DESIGNED	UCH		SIZE	CODE	IDENTIFICATION	VAR	REV
DRAWN	13 Aug 82 12:19:34	SBokse	A	1 1	1 3 3 2 -	0 2	A
UPDATED	APR/02/84	STECK	PROJ : C P U 1 6 K Version A			PAGE 21 OF 45	

23 Aug 84 11:39:24 a21.real.db

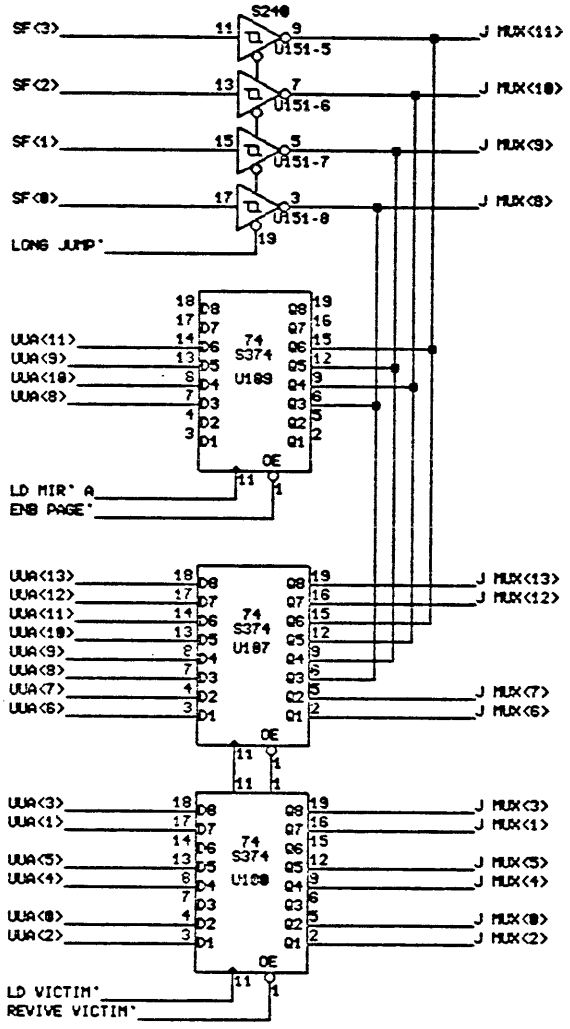

COPYRIGHT (c) 1984

THIS DOCUMENT IS NOT TO BE REPRODUCED IN ANY FORM OR TRANSMITTED IN WHOLE OR IN PART, WITHOUT PRIOR WRITTEN AUTHORIZATION OF PERQ SYSTEMS CORPORATION.

TITLE: JMUX<13:0> SOURCES

a22.dp

PERQ

DESIGNED	UCH		SIZE	CODE	IDENTIFICATION	VAR	REV
DRAWN	13 Aug 82 12:10:04	SBokse	A	11	1332-	02	A
UPDATED	APR/02/84	STECK	PROJ : CPU16K Version A			PAGE 22	OF 45

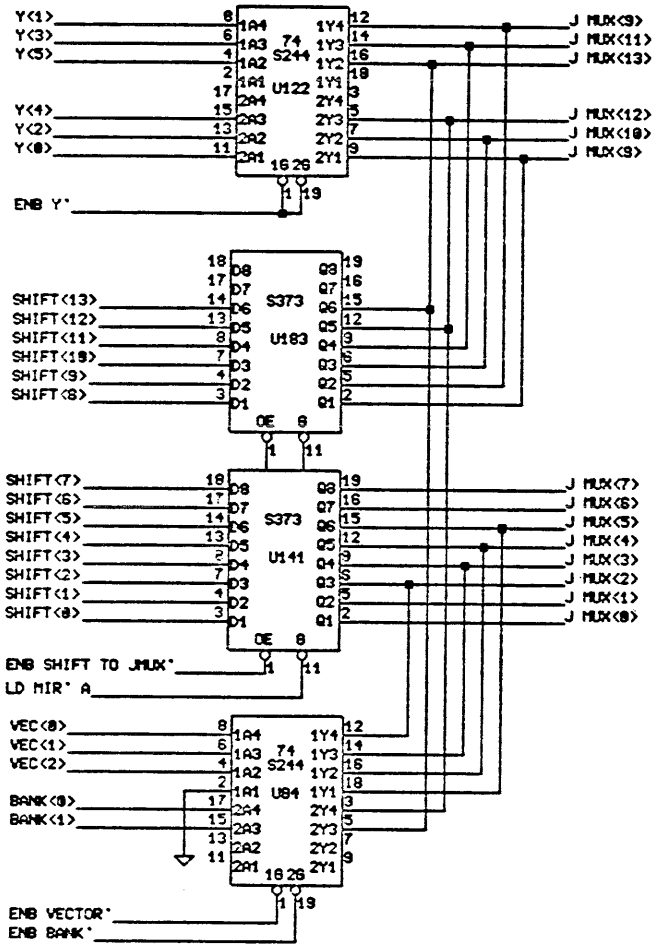

COPYRIGHT (c) 1984

THIS DOCUMENT IS NOT TO BE REPRODUCED IN ANY FORM OR TRANSMITTED IN WHOLE OR IN PART, WITHOUT PRIOR WRITTEN AUTHORIZATION OF PERQ SYSTEMS CORPORATION.

TITLE: JMUX<13:0> SOURCES

a23.db

PERQ

DESIGNED	UCH		SIZE	CODE	IDENTIFICATION	VAR	REV
DRAUN	13 Aug 82 12:19:04	SBakse	A	11	1332-	02	A
UPDATED	APR/16/84	STECK	PROJ :	CPU16K Version A		PAGE	23 OF 45

23 Aug 84 11:40:36 a23.real.db

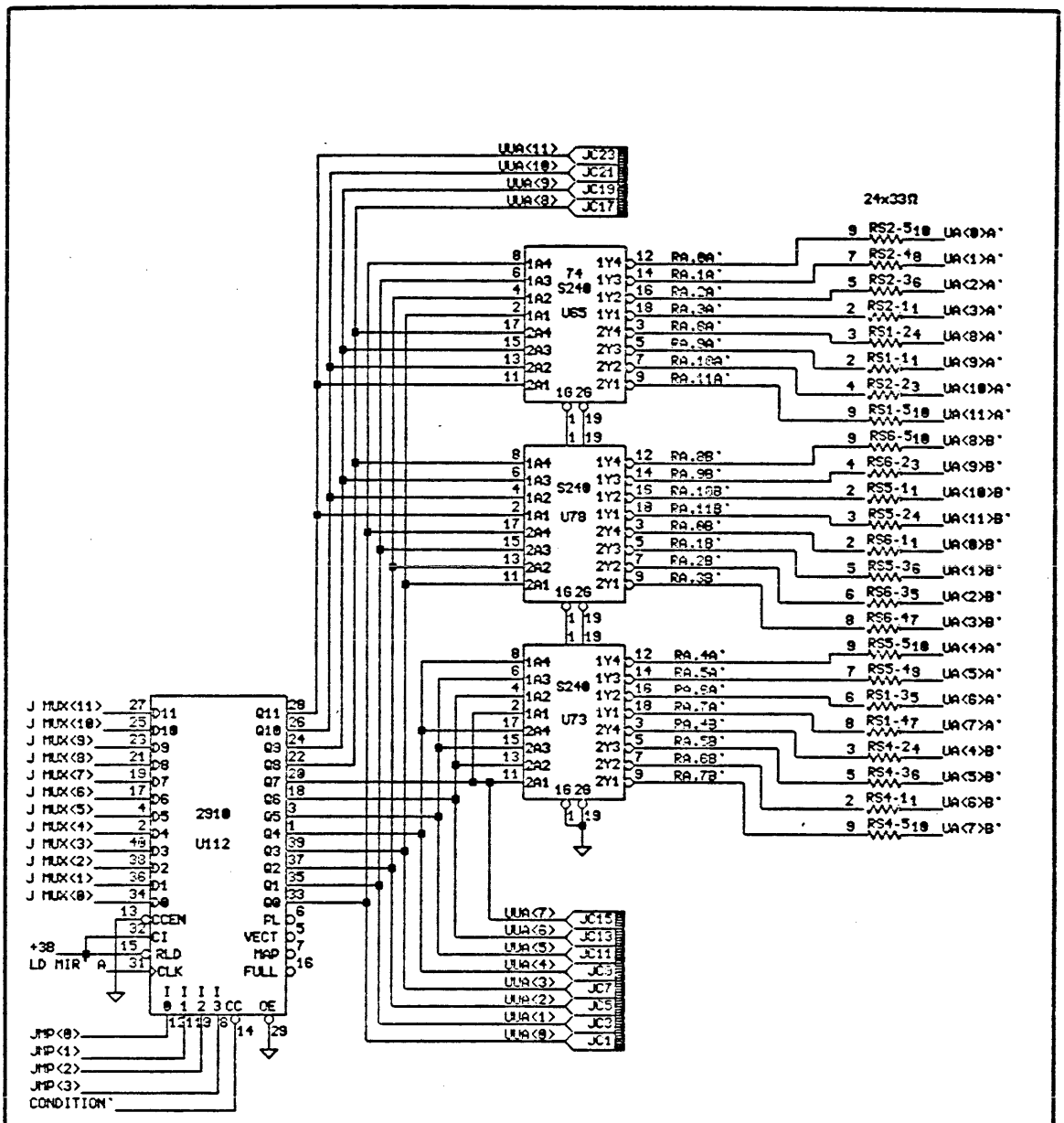

COPYRIGHT (c) 1984

THIS DOCUMENT IS NOT TO BE REPRODUCED IN ANY FORM OR TRANSMITTED IN WHOLE OR IN PART, WITHOUT PRIOR WRITTEN AUTHORIZATION OF PERQ SYSTEMS CORPORATION.

TITLE: MICROSTORE ADDRESS GENERATION						a24.db	
PERQ	DESIGNED	UCH		SIZE	CODE	IDENTIFICATION	VAR / REV
	DRAWN	13 Aug 82 12:10:04	SBolse	A	11	1332-	02 / A
	UPDATED	APR/16/84	STECK	PROJ : CPU16K Version A			PAGE 24 OF 45

23 Aug 84 11:41:37 a24.real.db

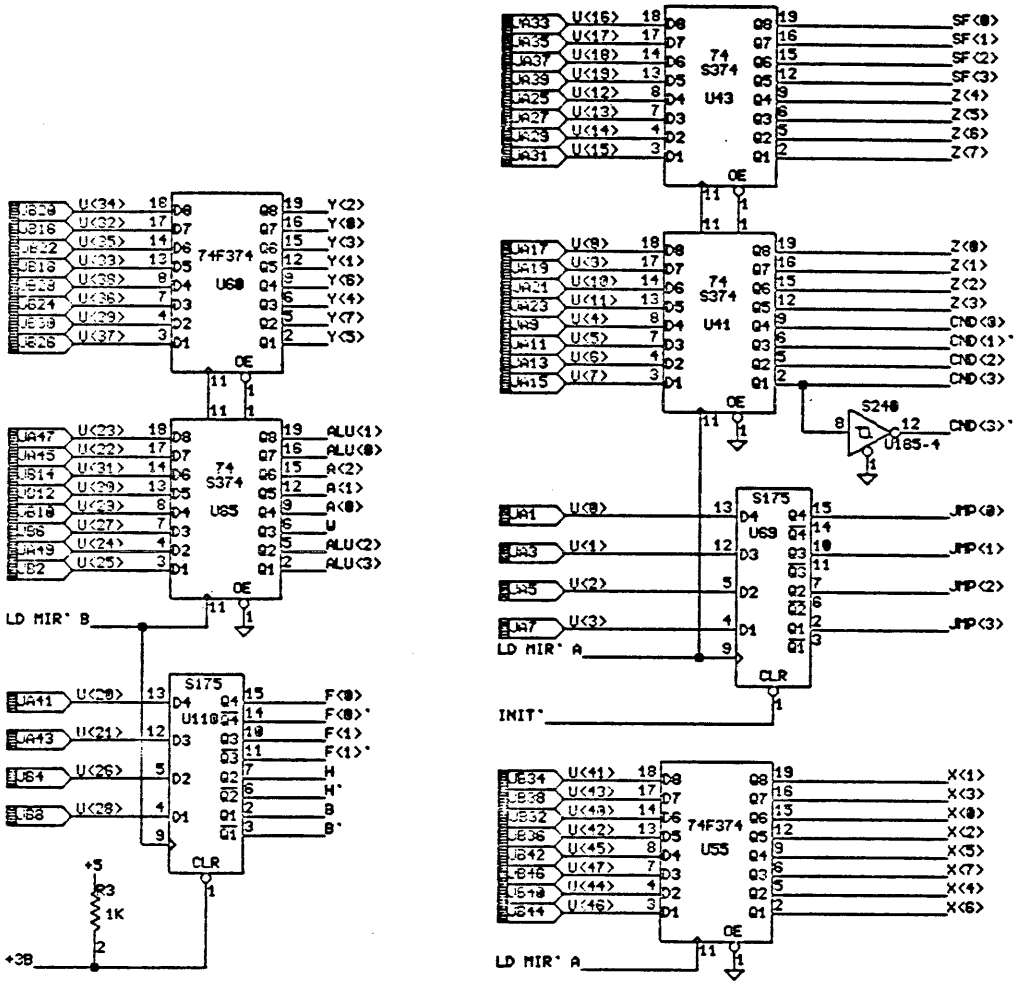

COPYRIGHT (c) 1984

THIS DOCUMENT IS NOT TO BE REPRODUCED IN ANY FORM OR TRANSMITTED IN WHOLE OR IN PART, WITHOUT PRIOR WRITTEN AUTHORIZATION OF PERQ SYSTEMS CORPORATION.

TITLE	MICROWORD PIPELINE					a25.dp	
PERQ	DESIGNED	UCH		SIZE	CODE	IDENTIFICATION	VAR	REV
	DRAWN	13 Aug 82 12:11:04	SBokse	A	1 1	1 3 3 2 -	0 2	A
	UPDATED	APR/02/84	STECK	PROJ :	C P U 1 6 K Version A		PAGE 25 OF 45	

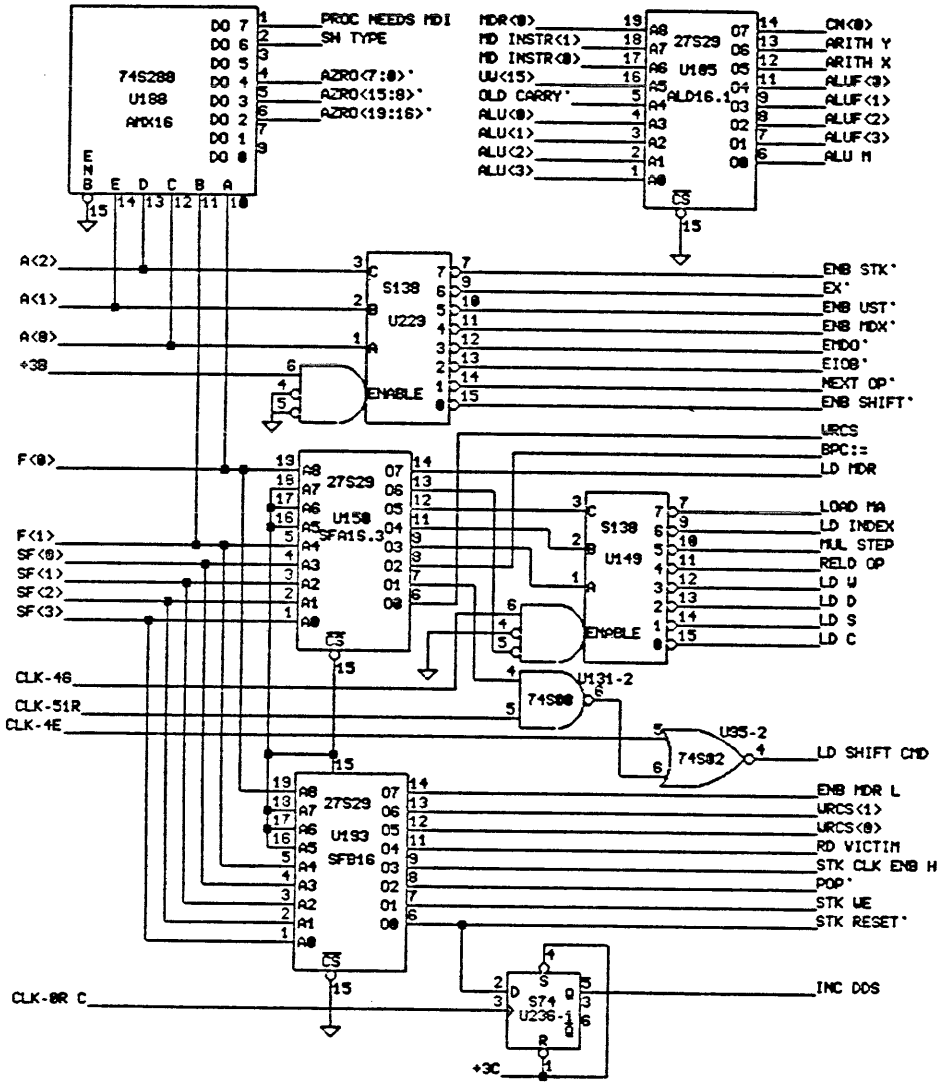

COPYRIGHT (c) 1984

THIS DOCUMENT IS NOT TO BE REPRODUCED IN ANY FORM OR TRANSMITTED IN WHOLE OR IN PART, WITHOUT PRIOR WRITTEN AUTHORIZATION OF PERQ SYSTEMS CORPORATION.

TITLE: MICROWORD DECODES

a26.db

PERQ

DESIGNED	UCH	
DRAWN	13 Aug 82 12:19:04	SBakse
UPDATED	APR/02/84	STECK

SIZE	CODE	IDENTIFICATION	VAR	REV
A	11	1332-	02	A

PROJ : CPU16K Version A

PAGE 26 OF 45

23 Aug 84 11:43:21 a26.real.db

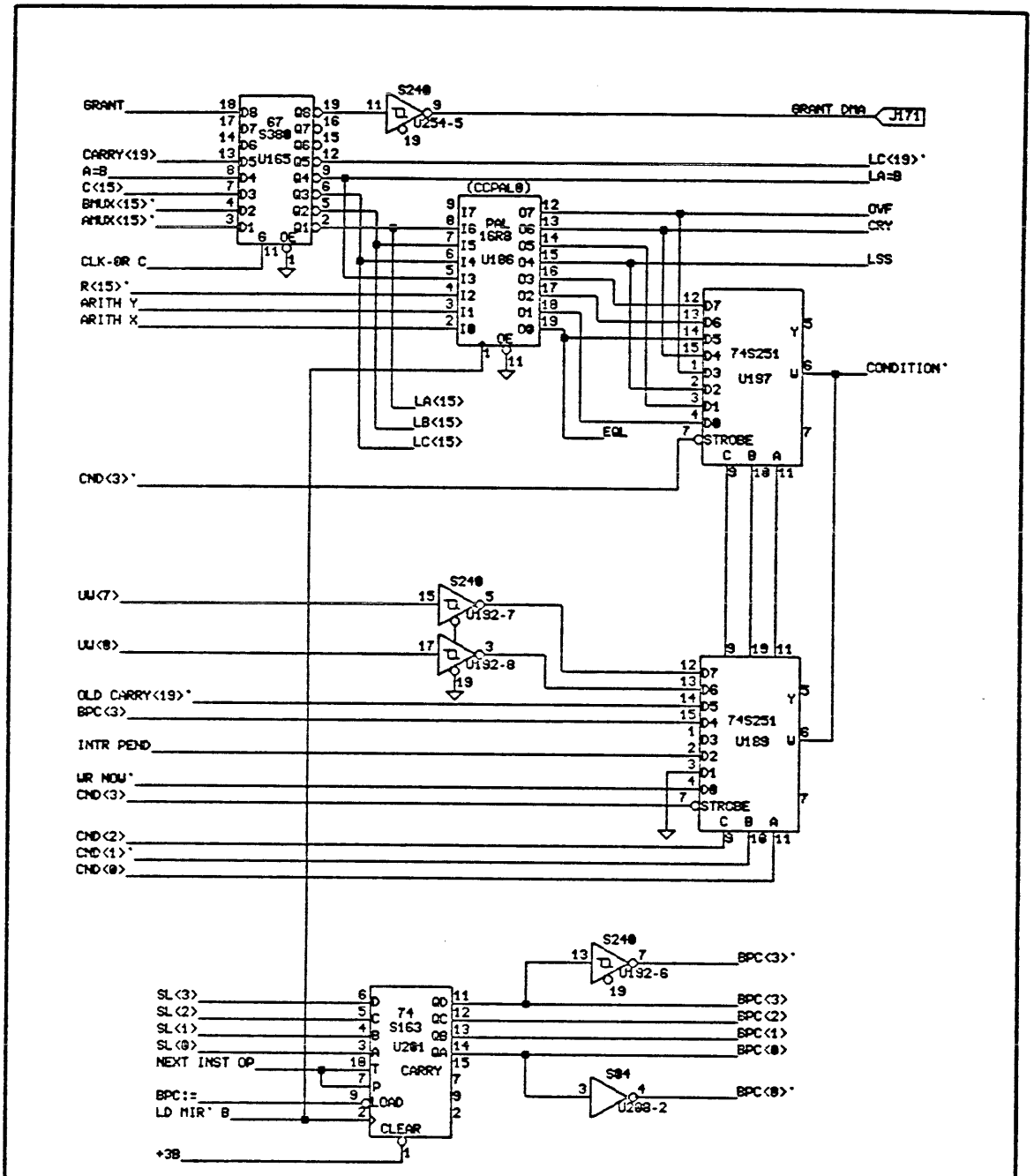

COPYRIGHT (c) 1984

THIS DOCUMENT IS NOT TO BE REPRODUCED IN ANY FORM OR TRANSMITTED IN WHOLE OR IN PART, WITHOUT PRIOR WRITTEN AUTHORIZATION OF PERQ SYSTEMS CORPORATION.

TITLE: CONDITION DECODE & BPC

a27.db

PERQ

DESIGNED	UCH	
DRAWN	13 Aug 82 12:10:04	SBokse
UPDATED	APR/02/84	STECK

SIZE	CODE	IDENTIFICATION	VAR	REV
A	11	1332-	02	A

PROJ : CPU16K Version A

PAGE 27 OF 45

23 Aug 84 11:44:07 a27.real.db

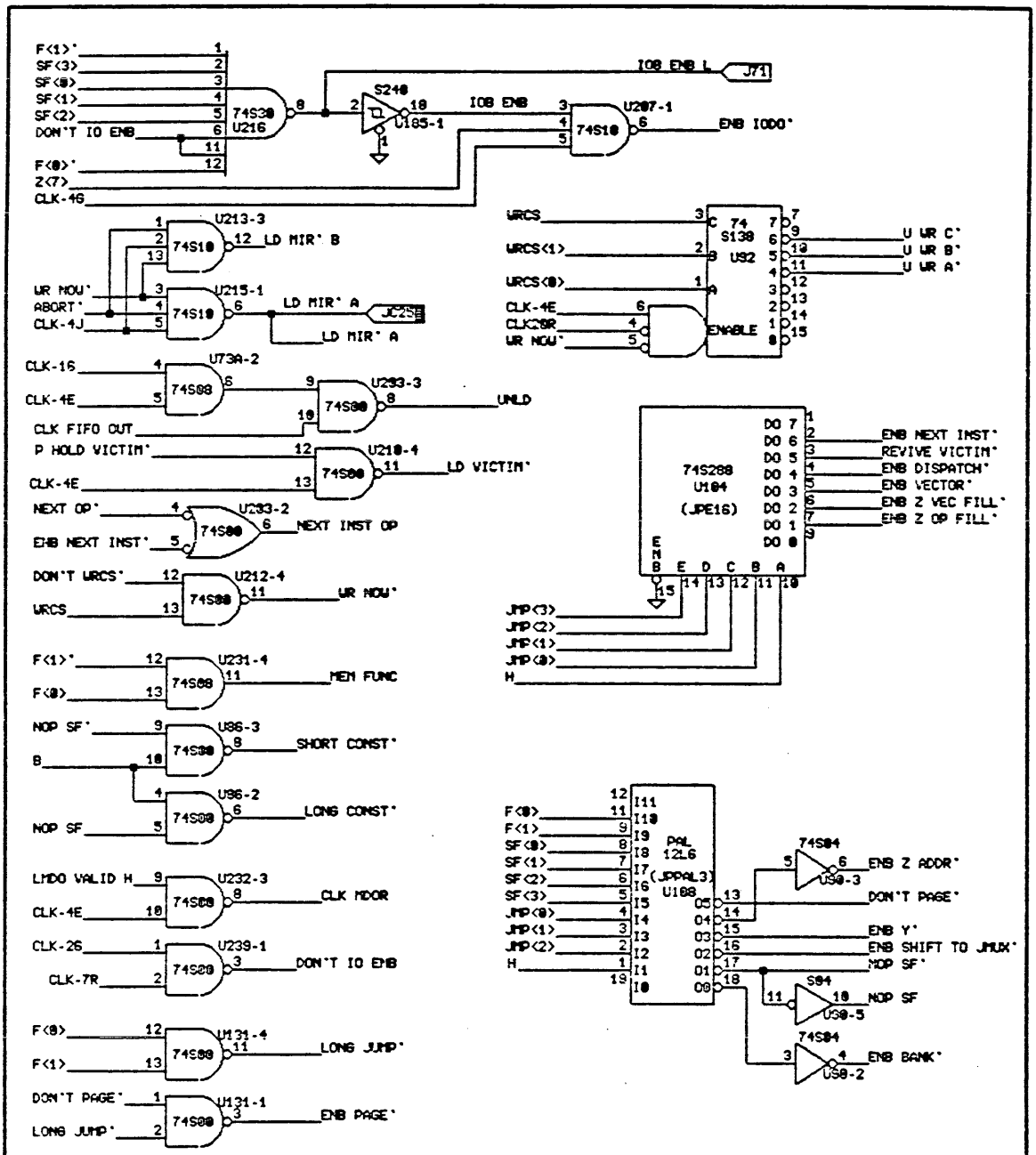

COPYRIGHT (c) 1984

THIS DOCUMENT IS NOT TO BE REPRODUCED IN ANY FORM OR TRANSMITTED IN WHOLE OR IN PART, WITHOUT PRIOR WRITTEN AUTHORIZATION OF PERQ SYSTEMS CORPORATION.

TITLE: MICROWORD DECODE

a29.db

PERQ

	DESIGNED	UCH	
	DRAWN	13 Aug 82 12:10:04	SBoksa
	UPDATED	09/July/84	STECK

SIZE	CODE	IDENTIFICATION	VAR	REV
A	11	1332-	02	C

PROJ : CPU16K Version A

PAGE 28 OF 45

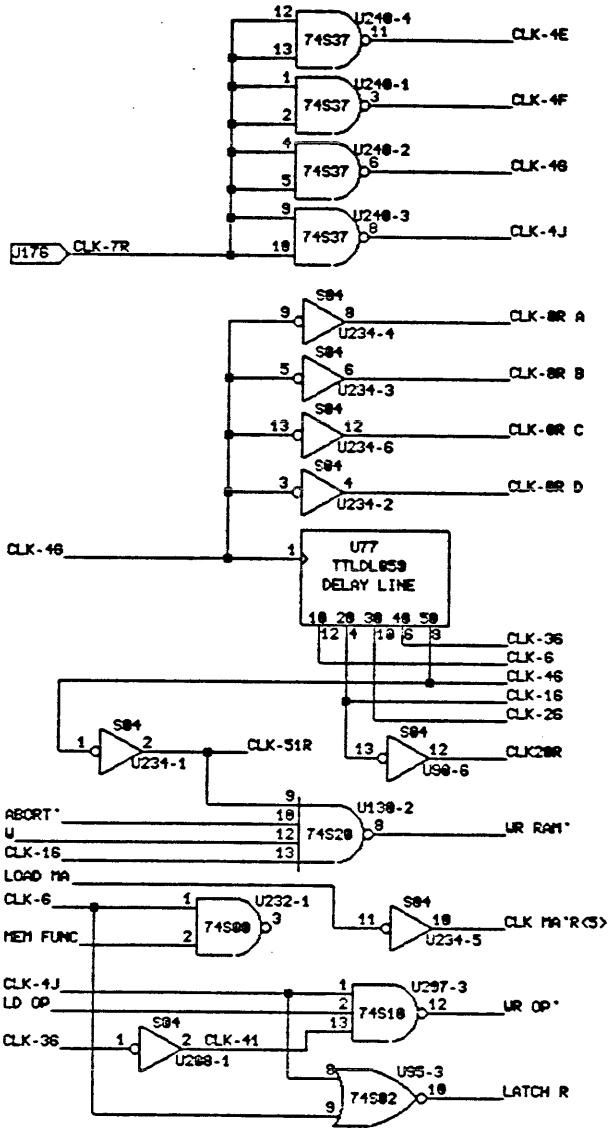

COPYRIGHT (c) 1984

THIS DOCUMENT IS NOT TO BE REPRODUCED IN ANY FORM OR TRANSMITTED IN WHOLE OR IN PART, WITHOUT PRIOR WRITTEN AUTHORIZATION OF PERQ SYSTEMS CORPORATION.

PERQ	TITLE	CPU CLOCKS				a29.db	
	DESIGNED	UCH		SIZE	CODE	IDENTIFICATION	VAR	REV
	DRAWN	13 Aug 82 12:10:04	SBokse	A	11	1332-	02	A
	UPDATED	APR/02/84	STECK	PROJ :	CPU16K Version A		PAGE 29 OF 45	

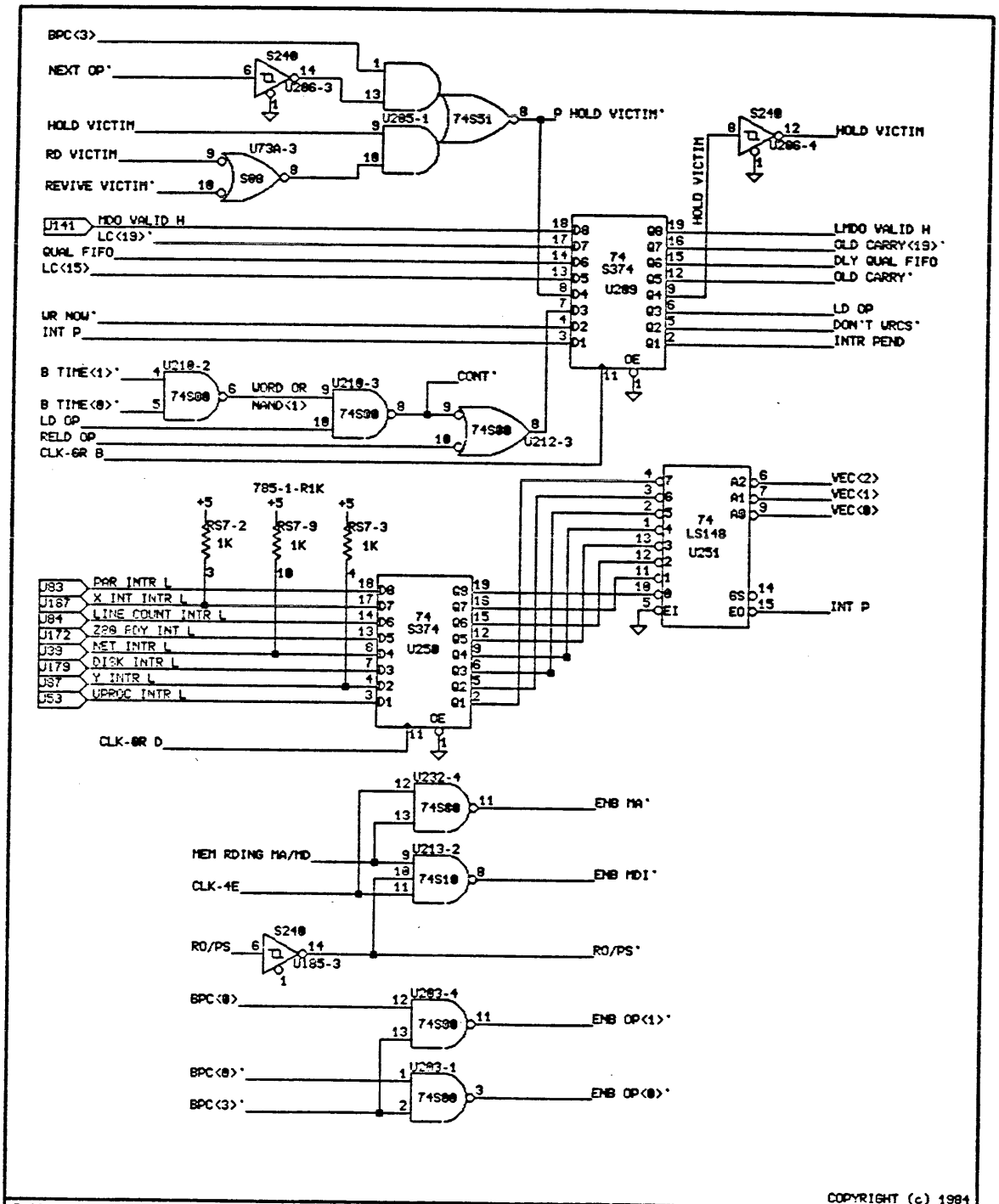

COPYRIGHT (c) 1984

THIS DOCUMENT IS NOT TO BE REPRODUCED IN ANY FORM OR TRANSMITTED IN WHOLE OR IN PART, WITHOUT PRIOR WRITTEN AUTHORIZATION OF PERQ SYSTEMS CORPORATION.

TITLE	R/U DECODES & INTERRUPTS					a30.dp	
PERQ	DESIGNED	UCH		SIZE	CODE	IDENTIFICATION	VAR	REV
	DRAWN	13 Aug 82 12:10:04	SBokse	A	11	1332-	02	A
	UPDATED	APR/02/84	STECK	PROJ :	CPU 16K Version A		PAGE 30 OF 45	

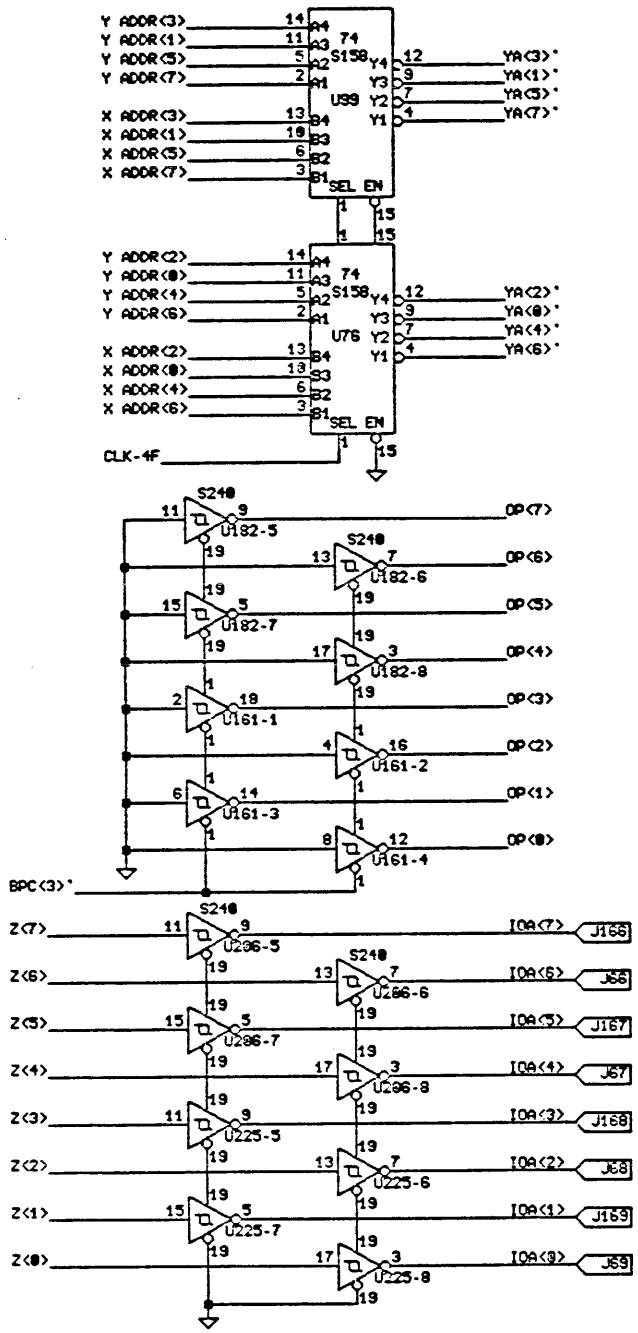

COPYRIGHT (c) 1984

THIS DOCUMENT IS NOT TO BE REPRODUCED IN ANY FORM OR TRANSMITTED IN WHOLE OR IN PART, WITHOUT PRIOR WRITTEN AUTHORIZATION OF PERQ SYSTEMS CORPORATION.

TITLE: Y ADDRESS MUX & IOA SOURCES

a31.db

PERQ

DESIGNED	UCH	
DRAWN	13 Aug 82 12:19:04	SBokse
UPDATED	APR/82/84	STECK

SIZE	CODE	IDENTIFICATION	VAR	REV
A	11	1332-	02	A

PROJ : CPU16K Version A

23 Aug 84 11:47:04 a31.real.db

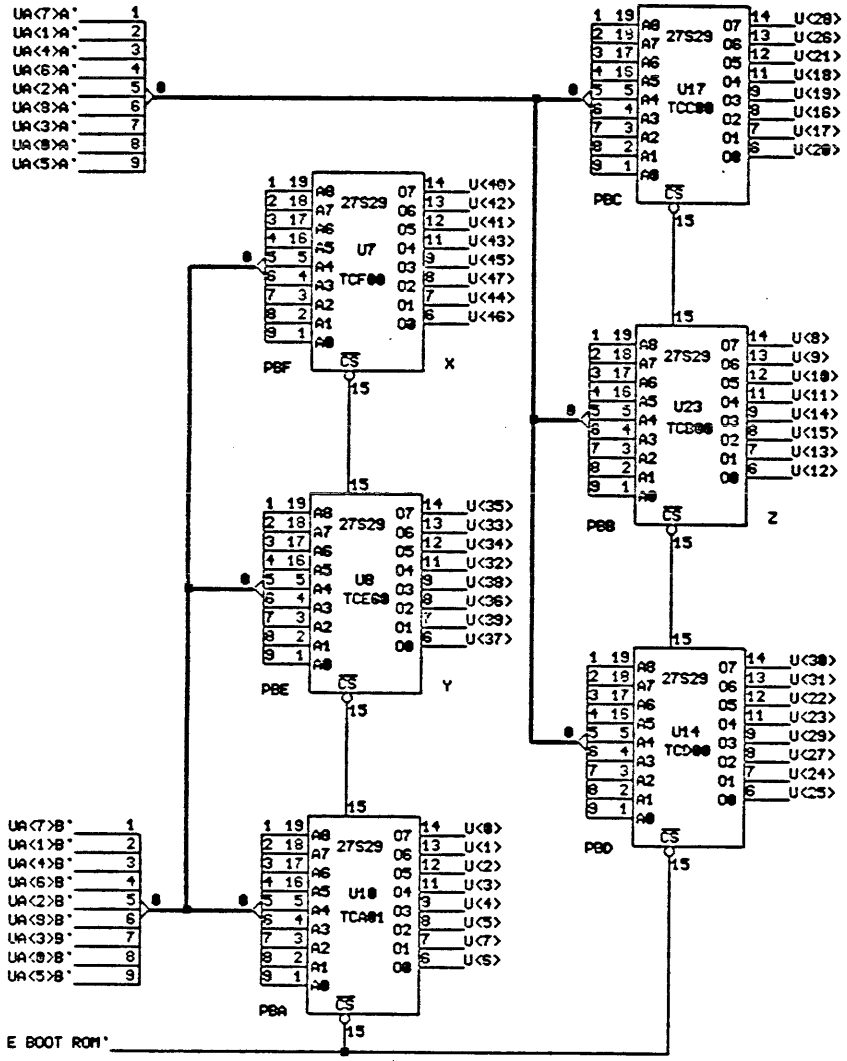

COPYRIGHT (c) 1984

THIS DOCUMENT IS NOT TO BE REPRODUCED IN ANY FORM OR TRANSMITTED IN WHOLE OR IN PART, WITHOUT PRIOR WRITTEN AUTHORIZATION OF PERQ SYSTEMS CORPORATION.

TITLE: MICROWORD BOOT ROM

a32.db

PERQ

DESIGNED	UCH		SIZE	CODE	IDENTIFICATION	VAR	REV
DRAWN	13 Aug 82 12:10:04	SBokse	A	1 1	1 3 3 2 -	0 2	D
UPDATED	AUG/22/84	STECK	PROJ :	C P U 1 6 K Version A		PAGE 32 OF 45	

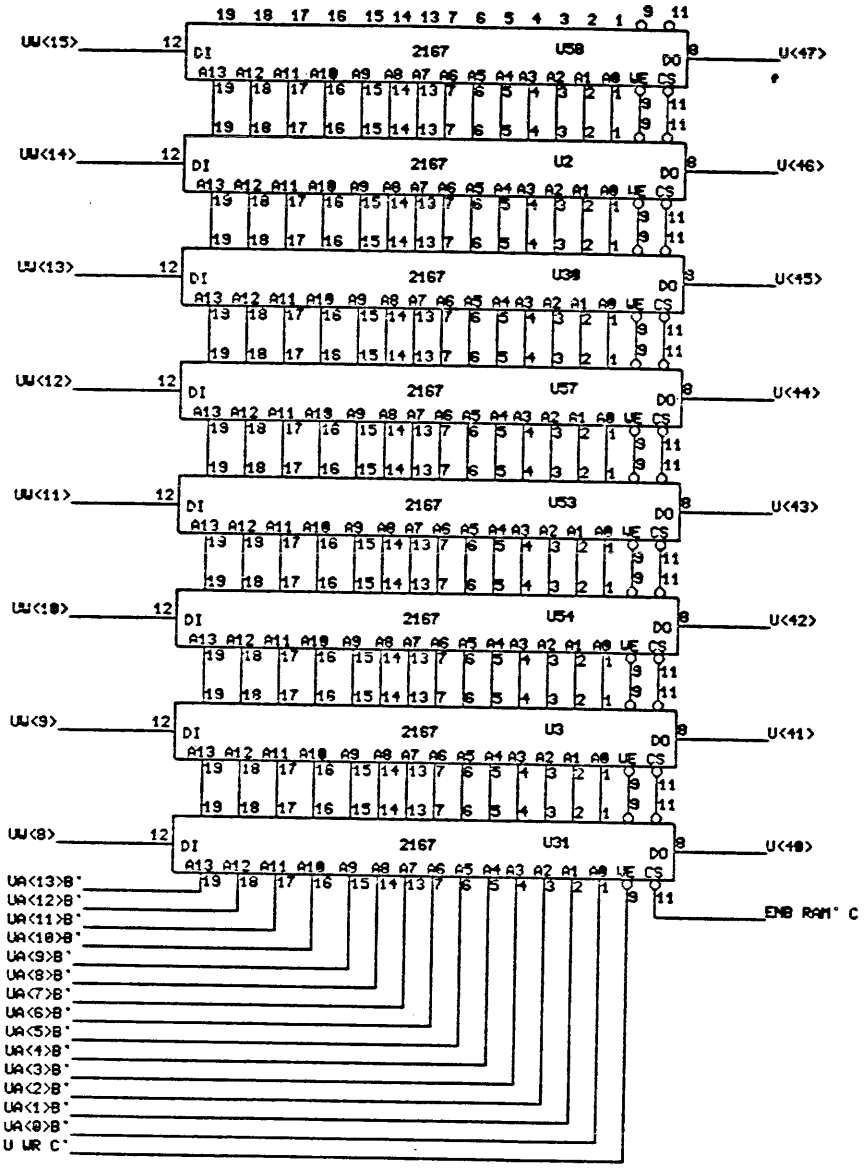

THIS DOCUMENT IS NOT TO BE REPRODUCED IN ANY FORM OR TRANSMITTED IN WHOLE OR IN PART, WITHOUT PRIOR WRITTEN AUTHURIZATION OF PERQ SYSTEMS CORPORATION.

COPYRIGHT (c) 1984

TITLE: C X UCS ARRAY

a33.dp

PERQ

DESIGNED	UCH		SIZE	CODE	IDENTIFICATION	VAR / REV
DRAWN	13 Aug 82 12:19:04	SBakse	A	11	1332-	02 / A
UPDATED	APR/02/84	STECK	PROJ : CPU16K Version A			PAGE 33 OF 45

23 Aug 84 11:48:35 a33.real.dp

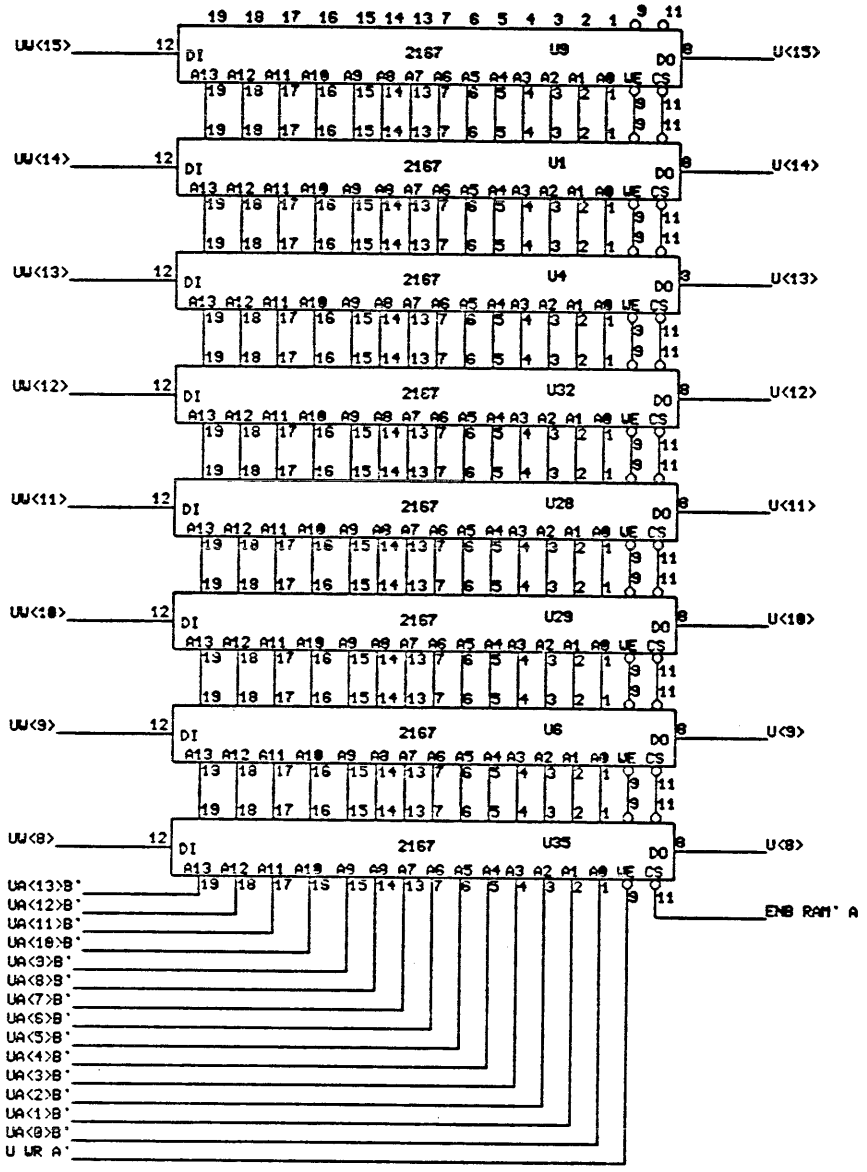

COPYRIGHT (c) 1984

THIS DOCUMENT IS NOT TO BE REPRODUCED IN ANY FORM OR TRANSMITTED IN WHOLE OR IN PART, WITHOUT PRIOR WRITTEN AUTHORIZATION OF PERQ SYSTEMS CORPORATION.

TITLE	A X	UCS ARRAY				a34.dp	
PERQ	DESIGNED	UCH		SIZE	CODE	IDENTIFICATION	VAR	REV
	DRAWN	13 Aug 84 12:10:04	SBokse	A	11	1332-	02	A
	UPDATED	APR/02/84	STECK	PROJ :	CPU16K Version A		PAGE 34 OF 45	

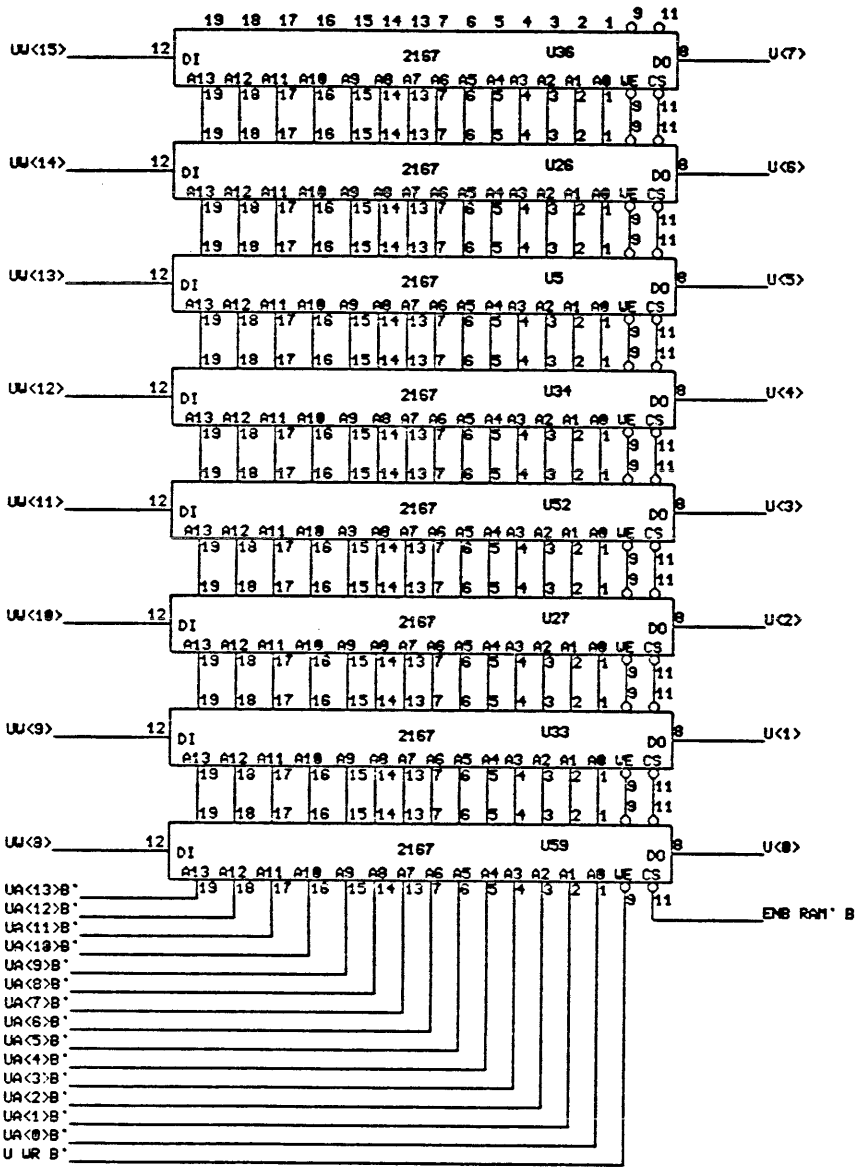

COPYRIGHT (c) 1984

THIS DOCUMENT IS NOT TO BE REPRODUCED IN ANY FORM OR TRANSMITTED IN WHOLE OR IN PART, WITHOUT PRIOR WRITTEN AUTHORIZATION OF PERQ SYSTEMS CORPORATION.

TITLE	B X UCS ARRAY					a35.db	
PERQ	DESIGNED	UCH		SIZE	CODE	IDENTIFICATION	VAR	REV
	DRAWN	13 Aug 82 12:10:04	SBokse	A	11	1332-	02	A
	UPDATED	APR/02/84	STECK	PROJ : CPU16K Version A			PAGE 35 OF 45	

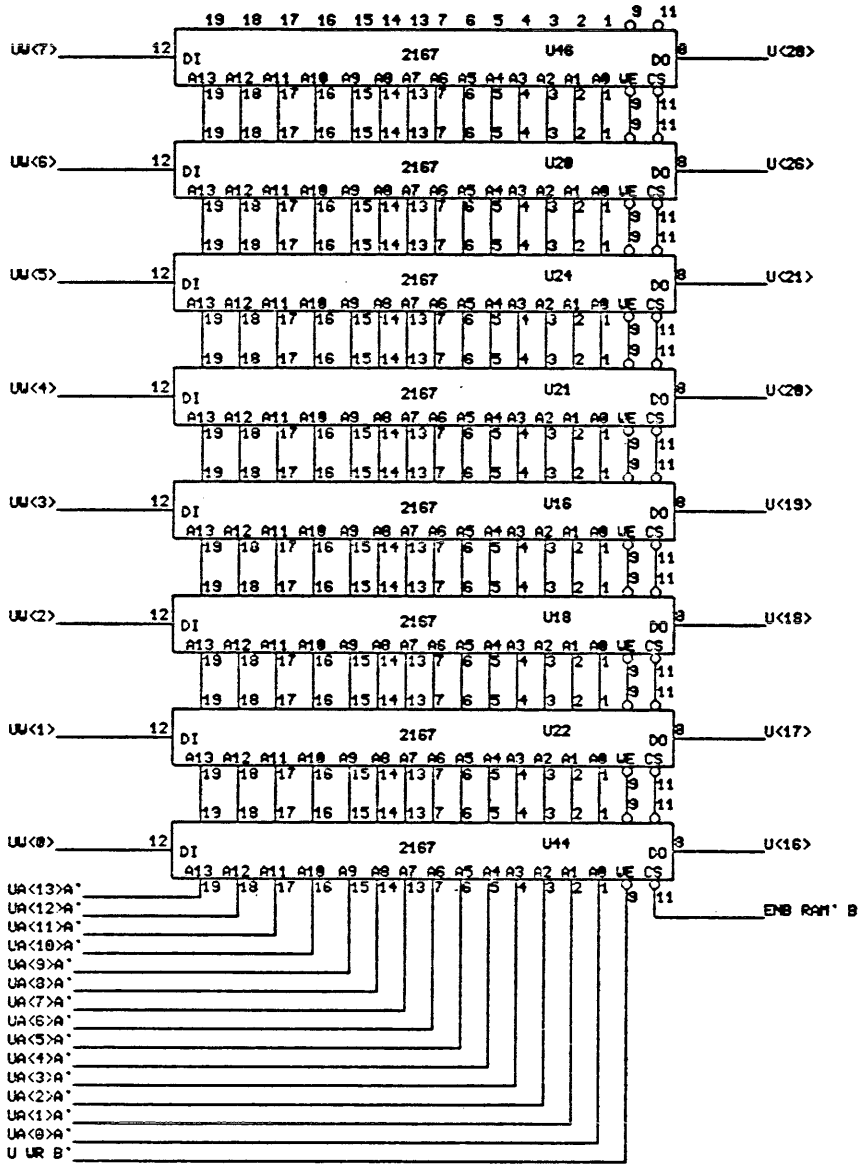

COPYRIGHT (c) 1984

THIS DOCUMENT IS NOT TO BE REPRODUCED IN ANY FORM OR TRANSMITTED IN WHOLE OR IN PART, WITHOUT PRIOR WRITTEN AUTHORIZATION OF PERQ SYSTEMS CORPORATION.

TITLE: B Y UCS ARRAY

a36.dp

PERQ

DESIGNED	UCH		
DRAWN	13 Aug 82 12:10:04	SBokse	
UPDATED	APR/02/84	STECK	

SIZE	CODE	IDENTIFICATION	VAR	REV
A	11	1332-	02	A

PROJ : CPU16K Version A

23 Aug 84 11:58:57 a36.real.dp

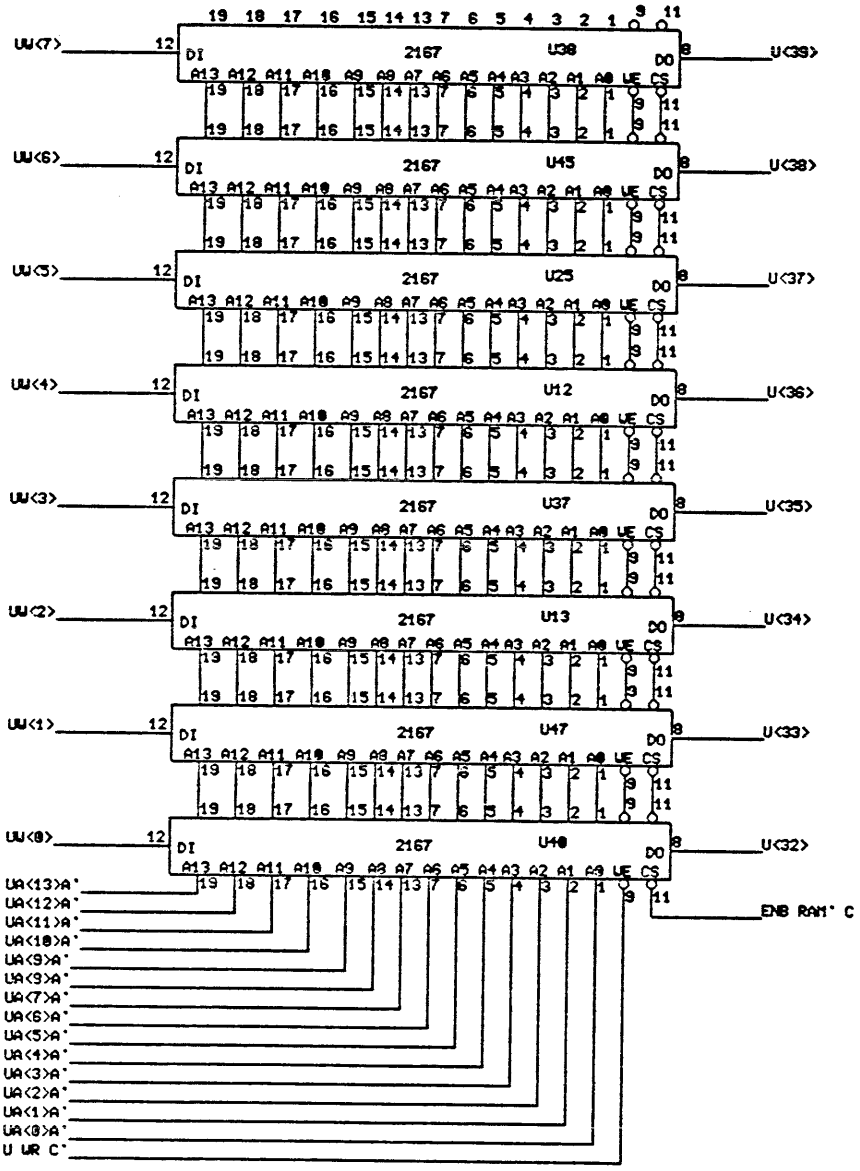

COPYRIGHT (c) 1984

THIS DOCUMENT IS NOT TO BE REPRODUCED IN ANY FORM OR TRANSMITTED IN WHOLE OR IN PART, WITHOUT PRIOR WRITTEN AUTHORIZATION OF PERQ SYSTEMS CORPORATION.

TITLE: C Y UCS ARRAY

a37.db

PERQ

DESIGNED	UCH		SIZE	CODE	IDENTIFICATION	VAR	REV
DRAWN	13 Aug 82 12:10:04	SBokse	A	11	1332-	02	A
UPDATED	APR/02/84	STECK	PROJ : CPU16K Version A			PAGE 37 OF 45	

23 Aug 84 11:51:45 a37.real.db

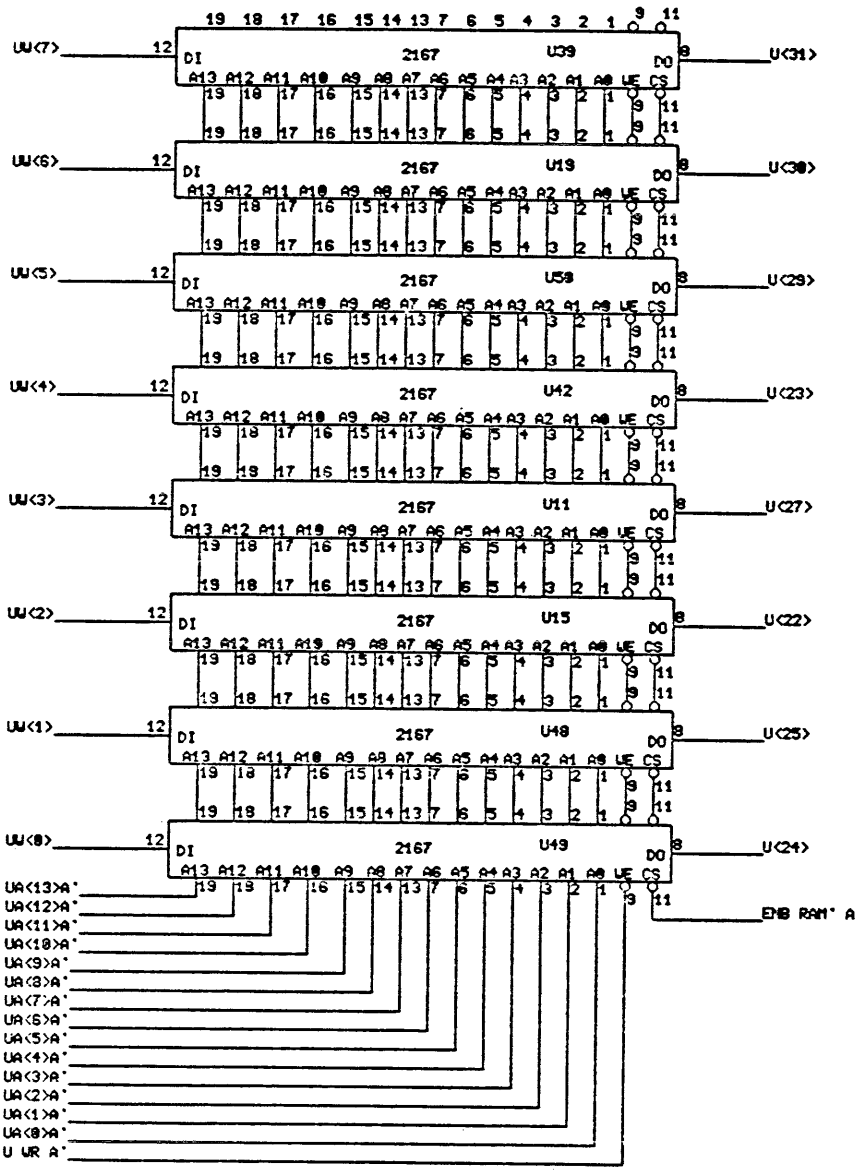

COPYRIGHT (c) 1984

THIS DOCUMENT IS NOT TO BE REPRODUCED IN ANY FORM OR TRANSMITTED IN WHOLE OR IN PART, WITHOUT PRIOR WRITTEN AUTHORIZATION OF PERQ SYSTEMS CORPORATION.

TITLE	A Y	UCS ARRAY				a38.db	
PERQ	DESIGNED	UCH		SIZE	CODE	IDENTIFICATION	VAR	REV
	DRAWN	13 Aug 82 12:10:34	SBokse	A	11	1332-	02	A
	UPDATED	APR/02/84	STECK	PROJ : CPU16K Version A			PAGE 38 OF 45	

23 Aug 84 11:52:32 a38.real.db

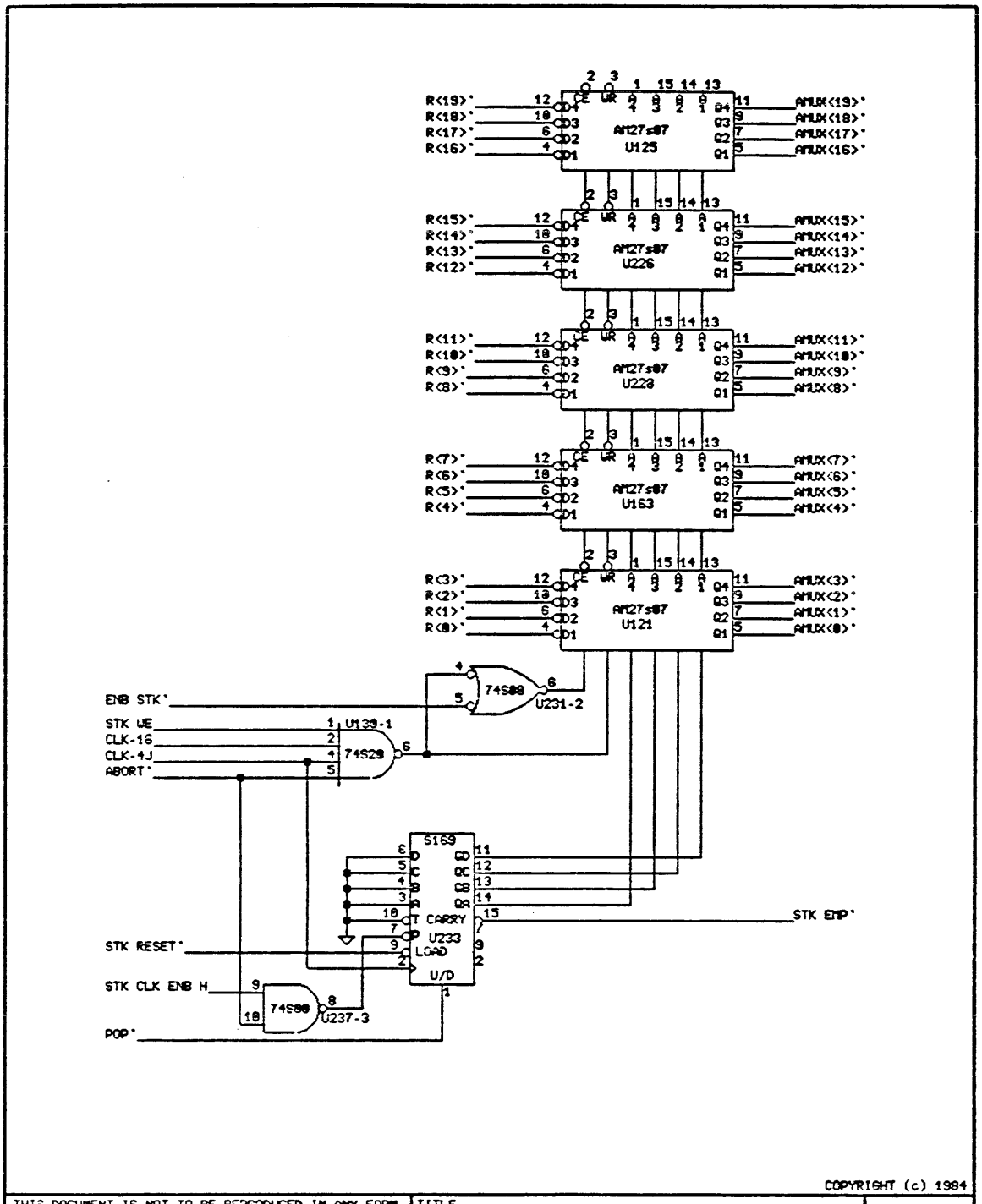

COPYRIGHT (c) 1984

THIS DOCUMENT IS NOT TO BE REPRODUCED IN ANY FORM OR TRANSMITTED IN WHOLE OR IN PART, WITHOUT PRIOR WRITTEN AUTHORIZATION OF PERQ SYSTEMS CORPORATION.

TITLE: ALU STACK						a39.db	
PERQ	DESIGNED	UCH		SIZE	CODE	IDENTIFICATION	VAR / REV
	DRAWN	13 Aug 82 12:10:04	SBakse	A	11	1332-	02 / A
	UPDATED	APR/02/84	STECK	PROJ : CPU16K Version A			PAGE 39 OF 45

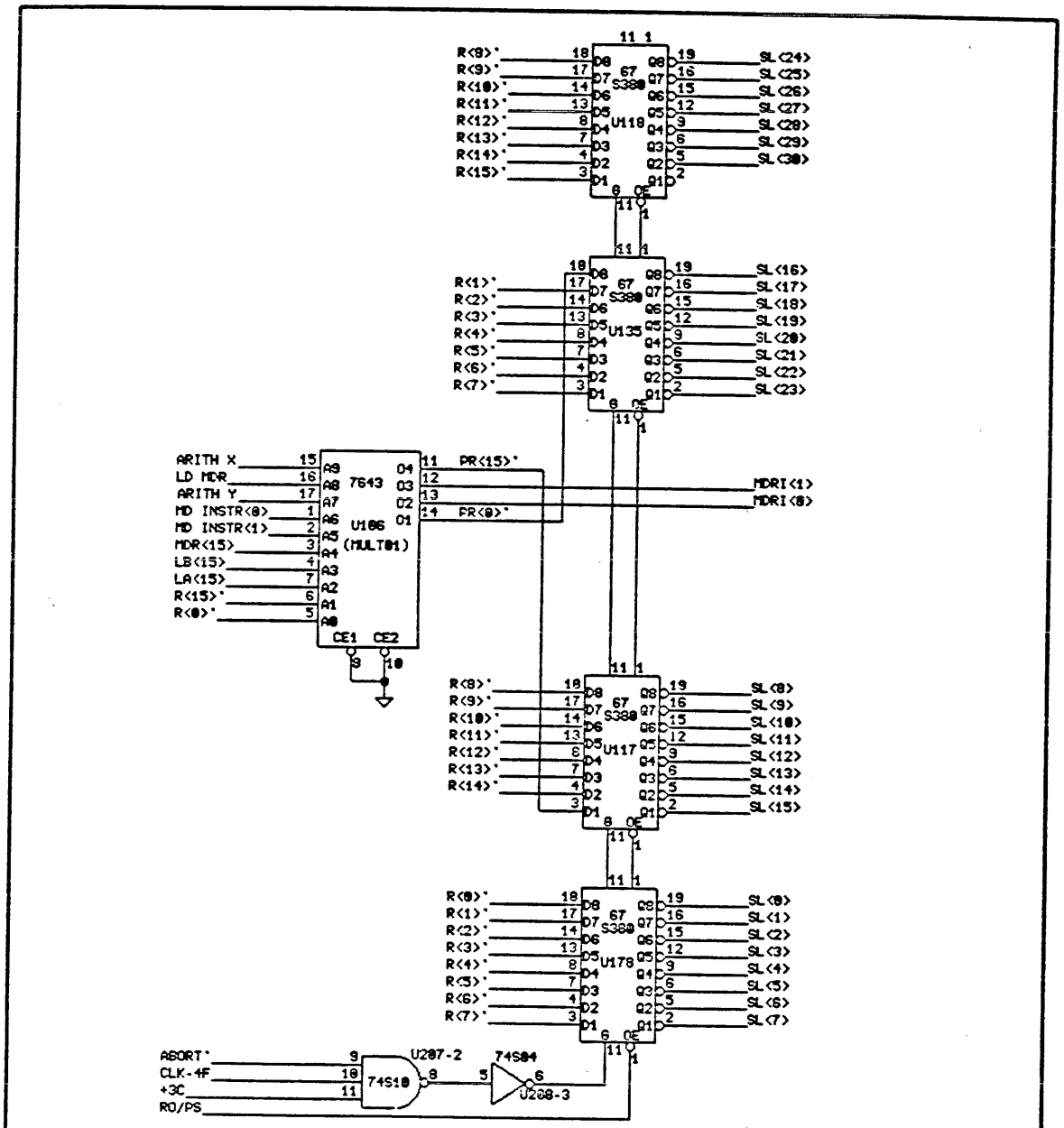

COPYRIGHT (c) 1984

THIS DOCUMENT IS NOT TO BE REPRODUCED IN ANY FORM OR TRANSMITTED IN WHOLE OR IN PART, WITHOUT PRIOR WRITTEN AUTHORIZATION OF PERQ SYSTEMS CORPORATION.

TITLE	SHIFTER SOURCE					a40.db	
PERQ	DESIGNED	UCH		SIZE	CODE	IDENTIFICATION	VAR	REV
	DRAWN	13 Aug 82 12:10:04	SBokse	A	11	1332-	02	A
	UPDATED	APR/16/84	STECK	PROJ :	CPU16K Version A		PAGE 40 OF 45	

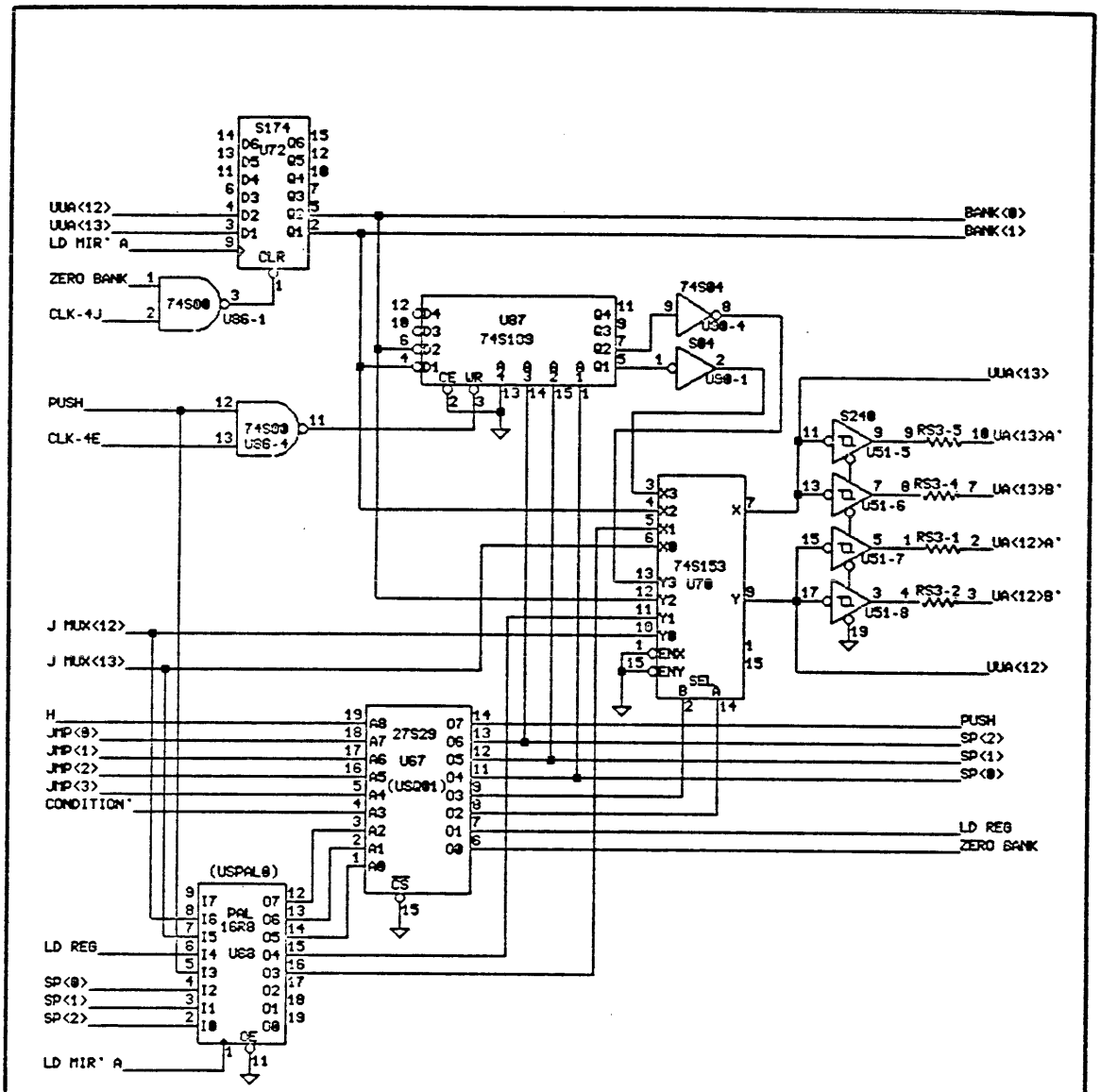

COPYRIGHT (c) 1984

THIS DOCUMENT IS NOT TO BE REPRODUCED IN ANY FORM OR TRANSMITTED IN WHOLE OR IN PART, WITHOUT PRIOR WRITTEN AUTHORIZATION OF PERQ SYSTEMS CORPORATION.

TITLE: MADR<13:12> SOURCE

a41.dp

PERQ

DESIGNED	UCH	
DRAWN	13 Aug 82 12:19:04	SBokse
UPDATED	APR/16/84	STECK

SIZE	CODE	IDENTIFICATION	VAR	REV
A	11	1332-	02	A

PROJ : CPU16K Version A

PAGE 41 OF 45

23 Aug 84 11:54:42 a41.real.dp

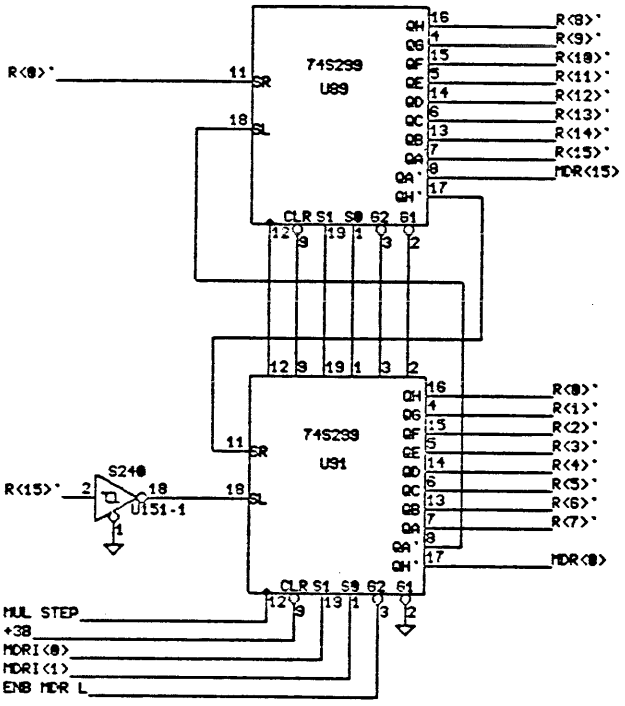

COPYRIGHT (c) 1984

THIS DOCUMENT IS NOT TO BE REPRODUCED IN ANY FORM OR TRANSMITTED IN WHOLE OR IN PART, WITHOUT PRIOR WRITTEN AUTHORIZATION OF PERQ SYSTEMS CORPORATION.

TITLE	MULTIPLIER REGISTER					a42.db	
PERQ	DESIGNED	UCH		SIZE	CODE	IDENTIFICATION	VAR	REV
	DRAWN	13 Aug 82 12:19:04	SBakse	A	11	1332-	02	A
	UPDATED	APR/02/84	STECK	PROJ :	CPU16K Version A		PAGE 42 OF 45	

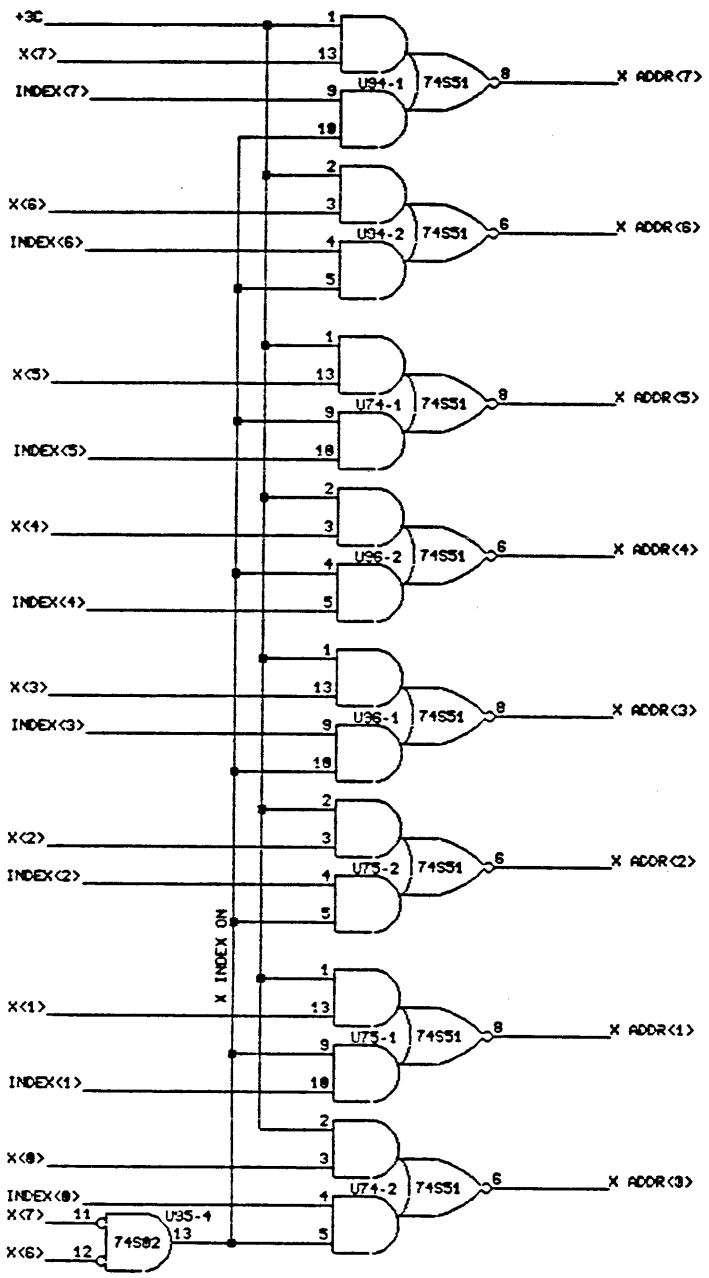

COPYRIGHT (c) 1984

THIS DOCUMENT IS NOT TO BE REPRODUCED IN ANY FORM OR TRANSMITTED IN WHOLE OR IN PART, WITHOUT PRIOR WRITTEN AUTHORIZATION OF PERQ SYSTEMS CORPORATION.

TITLE: X INDEX DECODE

a43.db

PERQ

DESIGNED	UCH		
DRAWN	13 Aug 82 12:19:34	SBokse	
UPDATED	APR/02/84	STECK	

SIZE	CODE	IDENTIFICATION	VAR	REV
A	11	1332-	02	A

PROJ : CPU16K Version A

PAGE 43 OF 45

23 Aug 84 11:55:48 a43.real.db

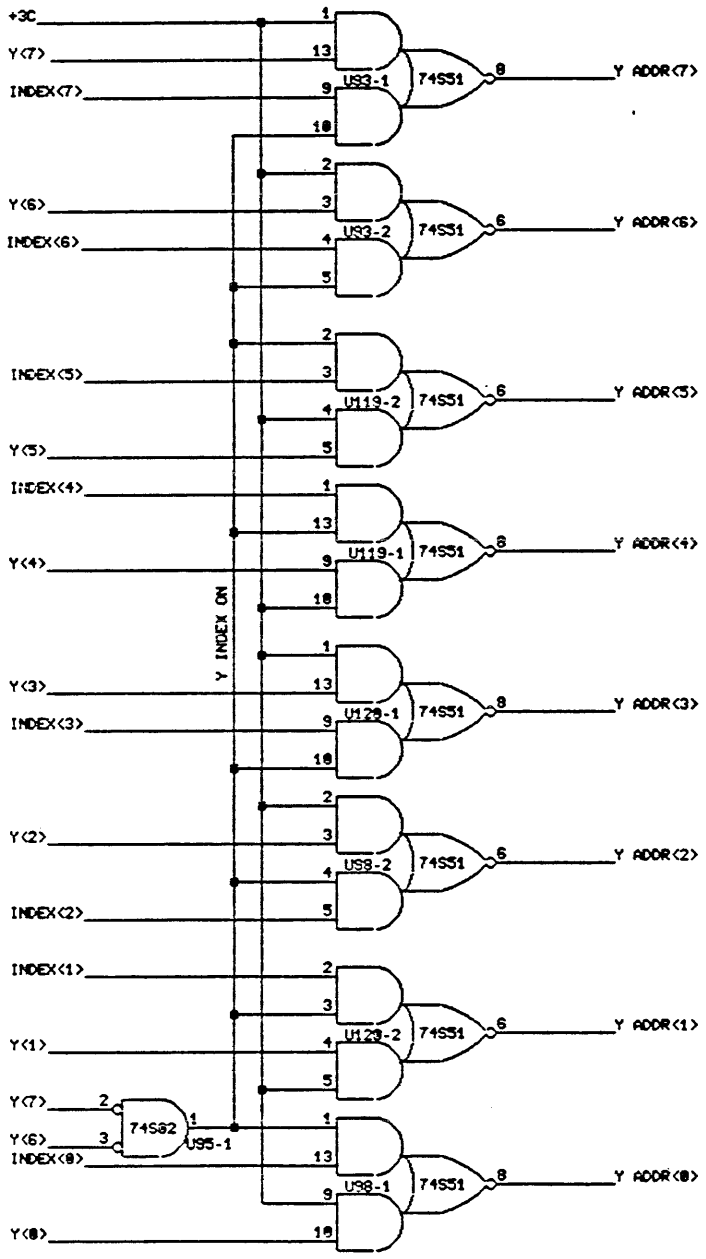

COPYRIGHT (c) 1984

THIS DOCUMENT IS NOT TO BE REPRODUCED IN ANY FORM OR TRANSMITTED IN WHOLE OR IN PART, WITHOUT PRIOR WRITTEN AUTHORIZATION OF PERQ SYSTEMS CORPORATION.

TITLE: Y INDEX DECODE

a44.db

PERQ

DESIGNED	UCH		SIZE	CODE	IDENTIFICATION	VAR	REV
DRAWN	13 Aug 82 12:10:04	SBckse	A	11	1332-	02	A
UPDATED	APR/02/84	STECK	PROJ :	CPU16K Version A		PAGE 44	OF 45

23 Aug 84 11:56:17 a44.real.db

R<7:0>=
LOW BYTE OF RESULT

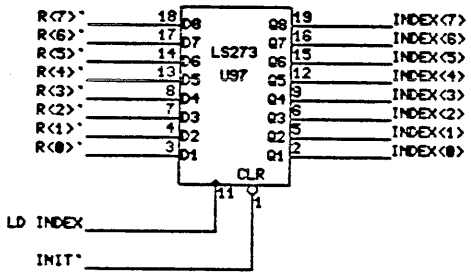

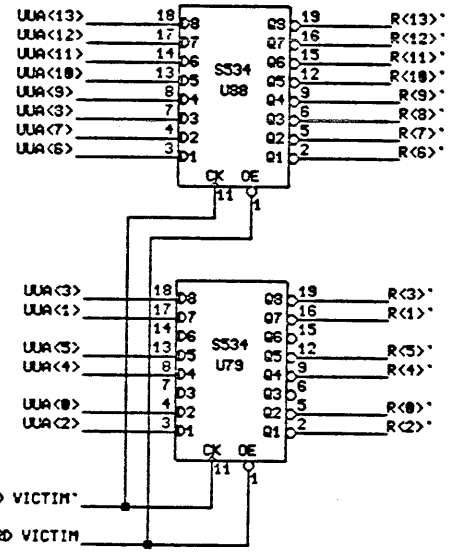

COPYRIGHT (c) 1984

THIS DOCUMENT IS NOT TO BE REPRODUCED IN ANY FORM OR TRANSMITTED IN WHOLE OR IN PART, WITHOUT PRIOR WRITTEN AUTHORIZATION OF PERQ SYSTEMS CORPORATION.

TITLE: INDEX REGISTER AND VICTIM LATCH							a45.dp	
PERQ	DESIGNED	UCH		SIZE: A	CODE: 11	IDENTIFICATION: 1332-	VAR: 02	REV: A
	DRAWN	13 Aug 22 12:10:84	SBakse					
	UPDATED	APR/16/84	STECK	PROJ : CPU16K Version A			PAGE 45 OF 45	

Part/Page Cross Reference 01 Aug 84 14:46:54

Using Files: A01.WL to A45.WL

PART..TYPE.....Pages Numbers

U1....2167.....34
U2....2167.....33
U3....2167.....33
U4....2167.....34
U5....2167.....35
U6....2167.....34
U7....27S29.....32
U8....27S29.....32
U9....2167.....34
U10...27S29.....32
U11...2167.....38
U12...2167.....37
U13...2167.....37
U14...27S29.....32
U15...2167.....38
U16...2167.....36
U17...27S29.....32
U18...2167.....36
U19...2167.....38
U20...2167.....36
U21...2167.....36
U22...2167.....36
U23...27S29.....32
U24...2167.....36
U25...2167.....37
U26...2167.....35
U27...2167.....35
U28...2167.....34
U29...2167.....34
U30...2167.....33
U31...2167.....33
U32...2167.....34
U33...2167.....35
U34...2167.....35
U35...2167.....34
U36...2167.....35
U37...2167.....37
U38...2167.....37
U39...2167.....38
U40...2167.....37
U41...74S374.....25
U42...2167.....38
U43...74S374.....25
U44...2167.....36
U45...2167.....37

U46...2167.....36
U47...2167.....37
U48...2167.....38
U49...2167.....38
U50...2167.....38
U51...74S240/1.....41 41 41 41
U52...2167.....35
U53...2167.....33
U54...2167.....33
U55...74F374.....25
U56...74S374..... 9
U57...2167.....33
U58...2167.....33
U59...2167.....35
U60...74F374.....25
U61...93422..... 6
U62...93422..... 6
U63...93422..... 7
U64...93422..... 7
U65...74S240.....24
U66...74S00.....17 17 17 17
U67...27S29.....41
U68...PAL16R8.....41
U69...74S175.....25
U70...74S153.....41
U71...74S374..... 9
U72...74S174.....41
U73...74S240.....24
U74...74S51.....43 43
U75...74S51.....43 43
U76...74S158.....31
U77...TTLDL050.....29
U78...74S240.....24
U79...74S534.....45
U80...93422..... 1
U81...93422..... 1
U82...93422..... 3
U83...93422..... 8
U84...74S244.....23
U85...74S374.....25
U86...74S00.....41 41 28 28
U87...74S189.....41
U88...74S534.....45
U89...74S299.....42
U90...74S04.....41 41 29 28 28 28
U91...74S299.....42
U92...74S138.....28
U93...74S51.....44 44
U94...74S51.....43 43
U95...74S02.....44 43 29 26
U96...74S51.....43 43
U97...74LS273.....45

U98...74S51.....44 44
U99...74S158.....31
U100..74S374.....22
U101..74S240..... 6
U102..74S240..... 8
U103..74S240/1.....21 21 21 21 7 7 7 7
U104..74S288.....28
U105..27S29.....26
U106..7643.....40
U107..74S374.....22
U108..PAL12L6.....28
U109..74S374.....22
U110..74S175.....25
U111..93422..... 3
U112..2910.....24
U113..93422..... 5
U114..25S10.....13
U115..25S10.....13
U116..74S373.....12
U117..67S380.....40
U118..67S380.....40
U119..74S51.....44 44
U120..74S51.....44 44
U121..AM27S07.....39
U122..74S244.....23
U123..74S240/1..... 7 7 7 7 4 4 4 4
U124..74S240/1.....21 21 21 21 7 7 7 7
U125..AM27S07.....39
U126..74F373.....19
U127..67S380.....19
U128..67S380.....19
U129..27S29.....19
U130..74S20.....39 29
U131..74S00.....28 28 26 17
U132..74S181.....10
U133..74S181.....10
U134..25S10.....13
U135..67S380.....40
U136..74S373.....12
U137..74S225.....12
U138..74S225.....12
U139..74LS240..... 2
U140..74S240..... 2
U141..74S373.....23
U142..74S182.....10
U143..74S373..... 9
U144..74S240/1.....21 21 21 21 21 21 21 21
U145..PAL16R4..... 5
U146..74S240/1.....21 21 21 21 5 5 5 5
U147..74S74.....19 16
U148..74F373.....19
U149..74S138.....26

U150..27S29.....26
U151..74S240/1.....42 22 22 22 22
U152..74S181.....10
U153..74S181..... 9
U154..74S181..... 9
U155..25S10.....13
U156..74S373.....12
U157..74S225.....12
U158..74S225.....12
U159..74LS670..... 3
U160..74LS670/1..... 1
U161..74S240/1.....31 31 31 31 1 1 1 1
U162..74S240.....21
U163..AM27S07.....39
U164..74S273.....16
U165..67S380.....27
U166..27S29.....19
U167..74S273.....16
U168..74S273.....16
U169..7643.....18
U170..74S374.....18
U171..27S29.....18
U172..74S287.....18
U173..28S86.....20
U174..28S86.....19
U175..25S10.....13
U176..25S10.....13
U177..74S373.....12
U178..67S380.....40
U179..27S29.....19
U180..27S29.....19
U181..74LS670..... 1
U182..74S240/1.....31 31 31 31 1 1 1 1
U183..74S373.....23
U185..74S240/1.....30 28 25 2 2 2 2
U186..PAL16R8.....27
U187..74S251.....27
U188..74S288.....26
U189..74S251.....27
U190..74S273.....16
U191..74S373..... 9
U192..74S240/1.....27 27 27 16 16
U193..27S29.....26
U194..25S10.....13
U195..25S10.....13
U196..25S10.....13
U197..7643.....15
U198..7643.....15
U199..7643.....15
U200..74LS670..... 3
U201..74S163.....27
U202..74S240/1..... 4 4 4 4 2 2 2 2

U203..74S00.....30 30 28 28
U204..7643.....20
U205..74S51.....30 20
U206..74S240/1.....31 31 31 31 30 30 16
U207..74S10.....40 29 28
U208..74S04.....40 29 27 20 16
U209..74S374.....30
U210..74S00.....30 30 28 16
U211..74S10.....12 12 12
U212..74S00.....30 28 16 16
U213..74S10.....30 28 9
U214..74LS158.....20
U215..74S10.....28 20 20
U216..74S30.....28
U217..25S10.....13
U218..25S10.....13
U219..74S374.....14
U220..7643.....15
U221..74S374.....14
U222..7643.....15
U223..7643.....15
U224..74S374..... 1
U225..74S240/1.....31 31 31 31 4 4 4 4
U226..AM27S07.....39
U227..74S273.....20
U228..AM27S07.....39
U229..74S138.....26
U230..74S534..... 5
U231..74S08.....39 28 20 20
U232..74S00.....30 29 28 16
U233..74S169.....39
U234..74S04.....29 29 29 29 29 29
U235..74S373..... 9
U236..74S74.....26 17
U237..74S00.....39 20 17 15
U238..74221.....17
U239..74S00.....28
U240..74S37.....29 29 29 29
U241..7643.....15
U242..7643.....15
U243..74S374.....15
U244..74S374..... 3
U245..74S534..... 2
U246..67S380.....11
U247..74S534..... 2
U248..74S534..... 4
U249..67S380.....11
U250..74S374.....30
U251..74LS148.....30
U252..74S534..... 4
U253..74S240..... 4
U254..74S240/1.....27 17 17 17 4 4 4 4

U255..74S534.....11
U256..74S534.....11
U257..74S534.....11
U258..67S380.....11
U259..67S380.....11
U260..74S374.....15
U73A..74S08.....30 28 16
C159..CAP.....17
C160..CAP.....17
R1....RES+5..... 7
R2....RES+5.....17
R3....RES+5.....25
R4....RES+5..... 9
R5....RES+5..... 9
R6....RES+5.....17
R7....RES.....17
R8....RES+5.....17
RS1...SEP10/1.....24 24 24 24 24
RS2...SEP10/1.....24 24 24 24 24
RS3...SEP10/1.....41 41 41 41
RS4...SEP10/1.....24 24 24 24
RS5...SEP10/1.....24 24 24 24 24
RS6...SEP10/1.....24 24 24 24 24
RS7...COM10/1.....30 30 30
J6....EDGE.....11
J7....EDGE.....11
J8....EDGE.....11
J9....EDGE.....11
J11...EDGE.....11
J12...EDGE.....11
J13...EDGE.....11
J14...EDGE.....11
J16...EDGE..... 4
J17...EDGE..... 4
J18...EDGE..... 4
J19...EDGE..... 4
J21...EDGE..... 2
J22...EDGE..... 2
J23...EDGE..... 2
J24...EDGE..... 2
J26...EDGE.....11
J27...EDGE.....11
J28...EDGE.....11
J29...EDGE.....11
J31...EDGE.....11
J32...EDGE.....11
J33...EDGE.....11
J34...EDGE.....11
J36...EDGE.....11
J37...EDGE.....11
J39...EDGE.....30
J53...EDGE.....30

J56...EDGE..... 4
J57...EDGE..... 4
J58...EDGE..... 4
J59...EDGE..... 4
J61...EDGE..... 2
J62...EDGE..... 2
J63...EDGE..... 2
J64...EDGE..... 2
J66...EDGE.....31
J67...EDGE.....31
J68...EDGE.....31
J69...EDGE.....31
J71...EDGE.....28
J72...EDGE.....17
J83...EDGE.....30
J84...EDGE.....30
J87...EDGE.....30
J106..EDGE.....11
J107..EDGE.....11
J108..EDGE.....11
J109..EDGE.....11
J111..EDGE.....11
J112..EDGE.....11
J113..EDGE.....11
J114..EDGE.....11
J116..EDGE..... 4
J117..EDGE..... 4
J118..EDGE..... 4
J119..EDGE..... 4
J121..EDGE..... 2
J122..EDGE..... 2
J123..EDGE..... 2
J124..EDGE..... 2
J126..EDGE.....11
J127..EDGE.....11
J128..EDGE.....11
J129..EDGE.....11
J131..EDGE.....11
J132..EDGE.....11
J133..EDGE.....11
J134..EDGE.....11
J136..EDGE.....11
J137..EDGE.....11
J141..EDGE.....30
J148..EDGE.....20
J153..EDGE.....20
J154..EDGE.....16
J156..EDGE..... 4
J157..EDGE..... 4
J158..EDGE..... 4
J159..EDGE..... 4
J161..EDGE..... 2

J162..EDGE..... 2
J163..EDGE..... 2
J164..EDGE..... 2
J166..EDGE.....31
J167..EDGE.....31
J168..EDGE.....31
J169..EDGE.....31
J171..EDGE.....27
J172..EDGE.....30
J173..EDGE.....20
J174..EDGE.....20
J176..EDGE.....29
J178..EDGE.....20
J179..EDGE.....30
J181..EDGE.....20
J182..EDGE.....20
J183..EDGE.....20
J184..EDGE.....20
J187..EDGE.....30
J196..EDGE.....17
J197..EDGE.....17
JA1...CABLE.....25
JA3...CABLE.....25
JA5...CABLE.....25
JA7...CABLE.....25
JA9...CABLE.....25
JA11..CABLE.....25
JA13..CABLE.....25
JA15..CABLE.....25
JA17..CABLE.....25
JA19..CABLE.....25
JA21..CABLE.....25
JA23..CABLE.....25
JA25..CABLE.....25
JA27..CABLE.....25
JA29..CABLE.....25
JA31..CABLE.....25
JA33..CABLE.....25
JA35..CABLE.....25
JA37..CABLE.....25
JA39..CABLE.....25
JA41..CABLE.....25
JA43..CABLE.....25
JA45..CABLE.....25
JA47..CABLE.....25
JA49..CABLE.....25
JB2...CABLE.....25
JB4...CABLE.....25
JB6...CABLE.....25
JB8...CABLE.....25
JB10..CABLE.....25
JB12..CABLE.....25

JB14..CABLE.....25
JB16..CABLE.....25
JB18..CABLE.....25
JB20..CABLE.....25
JB22..CABLE.....25
JB24..CABLE.....25
JB26..CABLE.....25
JB28..CABLE.....25
JB30..CABLE.....25
JB32..CABLE.....25
JB34..CABLE.....25
JB36..CABLE.....25
JB38..CABLE.....25
JB40..CABLE.....25
JB42..CABLE.....25
JB44..CABLE.....25
JB46..CABLE.....25
JB47..CABLE.....17
JC1...CABLE.....24
JC3...CABLE.....24
JC5...CABLE.....24
JC7...CABLE.....24
JC9...CABLE.....24
JC11..CABLE.....24
JC13..CABLE.....24
JC15..CABLE.....24
JC17..CABLE.....24
JC19..CABLE.....24
JC21..CABLE.....24
JC23..CABLE.....24
JC25..CABLE.....28

Signal/Page Cross Reference 01 Aug 84 14:46:54

Using Files: A01.WL to A45.WL

SIGNAL NAME.....Pages Numbers

+3A.....19 16 8 7 6 5 3 1
+3B.....42 27 26 25 24 20 17
+3C.....44 43 40 26 9
A<0>.....26 25
A<1>.....26 25
A<2>.....26 25
A=B.....27 10 9
ABORT`.....40 39 29 28 20
ALU M.....26 10 9
ALU Y<0>`.....19 11 10 9
ALU Y<10>`.....11 10 9
ALU Y<11>`.....11 10 9
ALU Y<12>`.....11 9
ALU Y<13>`.....11 9
ALU Y<14>`.....11 9
ALU Y<15>`.....11 9
ALU Y<16>`.....11 9
ALU Y<17>`.....11 9
ALU Y<18>`.....11 9
ALU Y<19>`.....11 9
ALU Y<1>`.....19 11 10 9
ALU Y<2>`.....19 11 10 9
ALU Y<3>`.....19 11 10 9
ALU Y<4>`.....19 11 10 9
ALU Y<5>`.....19 11 10 9
ALU Y<6>`.....19 11 10 9
ALU Y<7>`.....19 11 10 9
ALU Y<8>`.....11 10 9
ALU Y<9>`.....11 10 9
ALU<0>.....26 25
ALU<1>.....26 25
ALU<2>.....26 25
ALU<3>.....26 25
ALUF<0>.....26 10 9
ALUF<1>.....26 10 9
ALUF<2>.....26 10 9
ALUF<3>.....26 10 9
AMUX<0>`.....39 10 2 1
AMUX<10>`.....39 10 4 3
AMUX<11>`.....39 10 4 3
AMUX<12>`.....39 9 4 3
AMUX<13>`.....39 9 4 3
AMUX<14>`.....39 9 4 3
AMUX<15>`.....39 27 9 4 3
AMUX<16>`.....39 9 5

```
AMUX<17>`.............39  9  5
AMUX<18>`.............39  9  5
AMUX<19>`.............39  9  5
AMUX<1>`..............39 10  2  1
AMUX<2>`..............39 10  2  1
AMUX<3>`..............39 10  2  1
AMUX<4>`..............39 10  2  1
AMUX<5>`..............39 10  2  1
AMUX<6>`..............39 10  2  1
AMUX<7>`..............39 10  2  1
AMUX<8>`..............39 10  4  3
AMUX<9>`..............39 10  4  3
ARITH X...............40 27 26  5
ARITH Y...............40 27 26  5
AZRO<15:8>`...........26  4
AZRO<19:16>`..........26  5
AZRO<7:0>`............26  2
B.....................28 25  8  7  6
B TIME<0>`............30 20  3  1
B TIME<1>`............30 20  3  1
BANK<0>...............41 23
BANK<1>...............41 23
BMUX<0>`..............10  6
BMUX<10>`.............10  8  7
BMUX<11>`.............10  8  7
BMUX<12>`............. 9  7
BMUX<13>`............. 9  7
BMUX<14>`............. 9  7
BMUX<15>`.............27  9  7
BMUX<16>`............. 9  8  4
BMUX<17>`............. 9  8  4
BMUX<18>`............. 9  8  4
BMUX<19>`............. 9  8  4
BMUX<1>`..............10  6
BMUX<2>`..............10  6
BMUX<3>`..............10  6
BMUX<4>`..............10  6
BMUX<5>`..............10  6
BMUX<6>`..............10  6
BMUX<7>`..............10  6
BMUX<8>`..............10  8  7
BMUX<9>`..............10  8  7
BPC:=.................27 26
BPC<0>................30 27  2
BPC<0>`...............30 27
BPC<1>................27  3  2  1
BPC<2>................27  3  2  1
BPC<3>................30 27  2
BPC<3>`...............31 30 27
B`....................25  8  6
C<15>.................27  9
CARRY<19>.............27  9
```

CLK FIFO IN.....18 12
CLK FIFO OUT.....28 16 12
CLK MA`R<5>.....29 11
CLK MDOR.....28 5 4 3 2 1
CLK-OR A.....29 15
CLK-OR B.....30 29 14 11
CLK-OR C.....29 27 26 17
CLK-OR D.....30 29 20
CLK-16.....39 29 28
CLK-26.....29 28
CLK-36.....29
CLK-46.....29 12
CLK-4E.....41 30 29 28 26 19 16 15
CLK-4F.....40 31 29 12
CLK-4G.....29 28 26
CLK-4J.....41 39 29 28 12
CLK-51R.....29 26
CLK-6.....29
CLK-7R.....29 28
CLK20R.....29 28
CLR FIFO L.....16
CN+X.....10
CN+Y.....10
CN+Z.....10 9
CN<0>.....26 10
CND<0>.....27 25
CND<1>`.....27 25
CND<2>.....27 25
CND<3>.....27 25
CND<3>`.....27 25
CONDITION`.....41 27 24
CONT`.....30 17
CRY.....27 2
DIAG INC.....17
DIS USTORE L.....17
DISK INTR L.....30
DLY QUAL FIFO.....30 16
DLY QUAL FIFO`.....16
DON'T IO ENB.....28
DON'T MASK.....18 15
DON'T PAGE`.....28
DON'T WRCS`.....30 28
DST BITS<0>.....19 16
DST BITS<1>.....19 16
DST BITS<2>.....19 16
DST BITS<3>.....19 16
DST QUAD.....18
DST WRD<0>`.....18 16
DST WRD<1>`.....18 16
DST<0>.....15 14
DST<10>.....15 14
DST<11>.....15 14

DST<12>.....15 14
DST<13>.....15 14
DST<14>.....15 14
DST<15>.....15 14
DST<1>.....15 14
DST<2>.....15 14
DST<3>.....15 14
DST<4>.....15 14
DST<5>.....15 14
DST<6>.....15 14
DST<7>.....15 14
DST<8>.....15 14
DST<9>.....15 14
E BOOT ROM`.....32 17
EIOB`.....26 4 2
EL.....19 18
EMDO`.....26 4 2
ENB BANK`.....28 23
ENB DISPATCH`.....28 21
ENB IODO`.....28 11
ENB MA`.....30 11
ENB MDI`.....30 11
ENB MDR L.....42 26 9
ENB MDX`.....26 5
ENB NEXT INST`.....28 21
ENB OP<0>`.....30 1
ENB OP<1>`.....30 3
ENB PAGE`.....28 22
ENB RAM` A.....38 34 17
ENB RAM` B.....36 35 17
ENB RAM` C.....37 33 17
ENB SHIFT TO JMUX`.....28 23
ENB SHIFT`.....26 4 2
ENB STK`.....39 26
ENB UST`.....26 5 4 2
ENB VECTOR`.....28 23
ENB Y`.....28 23
ENB Z ADDR`.....28 21
ENB Z OP FILL`.....28 21
ENB Z VEC FILL`.....28 21
EQL.....27 2
ER.....19 18
EX`.....26 5 3 1
F<0>.....28 26 25
F<0>`.....28 25 20
F<1>.....28 26 25
F<1>`.....28 25 20
FIFO EVEN/ODD.....18 12
FIFO OR.....16 12
G<0>`.....10
G<1>`.....10
G<2>`.....10

```
G<3>`.....................10  9
GND.......................42 41 40 39 31 31 30 28 27 26 26 25 24 23 20 19 18
GND.......................17 16 15 15 14 13 13 12  9  8  7  6  5  4  4  3  2
GND.......................1
GRANT.....................27 20
GRANT DMA.................27
H.........................41 28 25
HOLD OFF L................20
HOLD VICTIM...............30
H`........................25 20
I/O MEM RQST..............20
I/O MEM WR................20
INC DDS...................26 17
INDEX<0>..................45 44 43
INDEX<1>..................45 44 43
INDEX<2>..................45 44 43
INDEX<3>..................45 44 43
INDEX<4>..................45 44 43
INDEX<5>..................45 44 43
INDEX<6>..................45 44 43
INDEX<7>..................45 44 43
INIT......................17
INIT L....................17
INIT`.....................45 25 20 17 16
INT P.....................30
INTR PEND.................30 27
IOA<0>....................31
IOA<1>....................31
IOA<2>....................31
IOA<3>....................31
IOA<4>....................31
IOA<5>....................31
IOA<6>....................31
IOA<7>....................31
IOB ENB L.................28  4  2
IOD<0>....................11  2
IOD<10>...................11  4
IOD<11>...................11  4
IOD<12>...................11  4
IOD<13>...................11  4
IOD<14>...................11  4
IOD<15>...................11  4
IOD<1>....................11  2
IOD<2>....................11  2
IOD<3>....................11  2
IOD<4>....................11  2
IOD<5>....................11  2
IOD<6>....................11  2
IOD<7>....................11  2
IOD<8>....................11  4
IOD<9>....................11  4
J MUX<0>..................24 23 22 21
```

J MUX<10>.....24 23 22 21
J MUX<11>.....24 23 22 21
J MUX<12>.....41 23 22
J MUX<13>.....41 23 22
J MUX<1>.....24 23 22 21
J MUX<2>.....24 23 22 21
J MUX<3>.....24 23 22 21
J MUX<4>.....24 23 22 21
J MUX<5>.....24 23 22 21
J MUX<6>.....24 23 22 21
J MUX<7>.....24 23 22 21
J MUX<8>.....24 23 22 21
J MUX<9>.....24 23 22 21
JMP<0>.....41 28 25 24
JMP<1>.....41 28 25 24
JMP<2>.....41 28 25 24
JMP<3>.....41 28 25 24
L SHIFT IN<0>`.....12
L SHIFT IN<1>`.....12
L SHIFT<0>.....21 9
L SHIFT<1>.....21 9
L SHIFT<2>.....21 9
L SHIFT<3>.....21 9
L TIME<0>`.....20 18
L TIME<1>`.....20 18
LA<15>.....40 27 5
LA=B.....27 5
LATCH ON.....16 12
LATCH R.....29 11 9
LB<15>.....40 27 5
LC<15>.....30 27 5
LC<19>`.....30 27
LD C.....26 16
LD D.....26 16
LD INDEX.....45 26
LD MDR.....40 26 5
LD MIR` A.....41 28 25 24 23 22
LD MIR` B.....28 27 25 18 9
LD OP.....30 29
LD REG.....41
LD S.....26 16
LD SHIFT CMD.....26 19
LD VICTIM`.....45 28 22
LD W.....26 16 12
LEFTOVER.....18 16
LINE COUNT INTR L.....30
LMDO VALID H.....30 28
LOAD MA.....29 26
LONG CONST`.....28 7
LONG JUMP`.....28 22
LSS.....27 2
MADR<0>.....11

```
MADR<10>.............11
MADR<11>.............11
MADR<12>.............11
MADR<13>.............11
MADR<14>.............11
MADR<15>.............11
MADR<16>.............11
MADR<17>.............11
MADR<18>.............11
MADR<19>.............11
MADR<1>..............11
MADR<2>..............11
MADR<3>..............11
MADR<4>..............11
MADR<5>..............11
MADR<6>..............11
MADR<7>..............11
MADR<8>..............11
MADR<9>..............11
MD INSTR<0>..........40 26 16
MD INSTR<1>..........40 26 16
MDI<0>...............15 11
MDI<10>..............15 11
MDI<11>..............15 11
MDI<12>..............15 11
MDI<13>..............15 11
MDI<14>..............15 11
MDI<15>..............15 11
MDI<1>...............15 11
MDI<2>...............15 11
MDI<3>...............15 11
MDI<4>...............15 11
MDI<5>...............15 11
MDI<6>...............15 11
MDI<7>...............15 11
MDI<8>...............15 11
MDI<9>...............15 11
MDO VALID H..........30
MDO<0>.............. 5  2  1
MDO<10>............. 4  3
MDO<11>............. 4  3
MDO<12>............. 4  3
MDO<13>............. 4  3
MDO<14>............. 4  3
MDO<15>............. 4  3
MDO<1>.............. 5  2  1
MDO<2>.............. 5  2  1
MDO<3>.............. 5  2  1
MDO<4>.............. 2  1
MDO<5>.............. 2  1
MDO<6>.............. 2  1
MDO<7>.............. 2  1
```

MDO<8>..... 4 3
MDO<9>..... 4 3
MDR<0>.....42 26
MDR<15>.....42 40
MDRI<0>.....42 40
MDRI<1>.....42 40
MEM FUNC.....29 28
MEM RDING MA/MD.....30 20
MEM RQST ST<0>.....20
MEM RQST ST<1>.....20
MEM RQST ST<2>.....20
MSK<0>.....19 15
MSK<10>.....19 15
MSK<11>.....19 15
MSK<12>.....19 15
MSK<13>.....19 15
MSK<14>.....19 15
MSK<15>.....19 15
MSK<1>.....19 15
MSK<2>.....19 15
MSK<3>.....19 15
MSK<4>.....19 15
MSK<5>.....19 15
MSK<6>.....19 15
MSK<7>.....19 15
MSK<8>.....19 15
MSK<9>.....19 15
MUL STEP.....42 26 5
NET INTR L.....30
NEXT INST OP.....28 27
NEXT OP`.....30 28 26 1
NOP SF.....28
NOP SF`.....28
OLD CARRY<19>`.....30 27
OLD CARRY`.....30 26
OLD EVEN/ODD.....18 12
OP<0>.....31 21 3 1
OP<1>.....31 21 3 1
OP<2>.....31 21 3 1
OP<3>.....31 21 3 1
OP<4>.....31 21 3 1
OP<5>.....31 21 3 1
OP<6>.....31 21 3 1
OP<7>.....31 21 3 1
OVF.....27 2
P HOLD VICTIM`.....30 28
P<0>`.....10
P<1>`.....10
P<2>`.....10
P<3>`.....10 9
PAR INTR L.....30
PHASE<0>.....18 16

```
PHASE<1>.............18 16
PHASE<2>.............18 16
PHASE<4>.............16
POP`.................39 26
PROC NEEDS MDI.......26 20
PUSH.................41
QUAL FIFO............30 18 16
R<0>`................45 42 40 39 16  9  6  5  1
R<10>`...............45 42 40 39  9  7  3
R<11>`...............45 42 40 39  9  7  3
R<12>`...............45 42 40 39  9  7  3
R<13>`...............45 42 40 39  9  7  3
R<14>`...............42 40 39  9  7  3
R<15>`...............42 40 39 27  9  7  5  3
R<16>`...............39  9  8  5
R<17>`...............39  9  8  5
R<18>`...............39  9  8  5
R<19>`...............39  9  8  5
R<1>`................45 42 40 39 16  9  6  5  1
R<2>`................45 42 40 39 16  9  6  5  1
R<3>`................45 42 40 39 16  9  6  5  1
R<4>`................45 42 40 39 16  9  6  1
R<5>`................45 42 40 39 16  9  6  1
R<6>`................45 42 40 39 16  9  6  1
R<7>`................45 42 40 39 16  9  6  1
R<8>`................45 42 40 39  9  7  3
R<9>`................45 42 40 39  9  7  3
RAS NOW..............20
RD VICTIM............45 30 26  9
RELD OP..............30 26
REVIVE VICTIM`.......30 28 22
RO DATA RDY..........18 15
RO/PS................40 30 19 18 16
RO/PS`...............30 19 12
ROP FN<0>`...........16 15
ROP FN<1>`...........16 15
ROP FN<2>`...........16 15
SA<0>................13
SA<1>................13
SA<2>................13
SA<3>................13
SA<4>................13
SA<5>................13
SA<6>................13
SB<0>................13
SB<1>................13
SB<2>................13
SB<3>................13
SB<4>................13
SB<5>................13
SB<6>................13
SC<0>................13
```

SC<1>.....13
SC<2>.....13
SC<3>.....13
SC<4>.....13
SC<5>.....13
SC<6>.....13
SD<0>.....13
SD<1>.....13
SD<2>.....13
SD<3>.....13
SD<4>.....13
SD<5>.....13
SD<6>.....13
SF<0>.....28 26 25 22 20
SF<1>.....28 26 25 22 20
SF<2>.....28 26 25 22 20
SF<3>.....28 26 25 22 20
SH TYPE.....26 19
SHIFT CNTL<0>.....19 13
SHIFT CNTL<1>.....19 13
SHIFT CNTL<2>.....19 13
SHIFT CNTL<3>.....19 13
SHIFT<0>.....23 15 9 2
SHIFT<10>.....23 15 4
SHIFT<11>.....23 15 4
SHIFT<12>.....23 15 4
SHIFT<13>.....23 15 4
SHIFT<14>.....15 4
SHIFT<15>.....15 4
SHIFT<1>.....23 15 9 2
SHIFT<2>.....23 15 9 2
SHIFT<3>.....23 15 9 2
SHIFT<4>.....23 15 2
SHIFT<5>.....23 15 2
SHIFT<6>.....23 15 2
SHIFT<7>.....23 15 2
SHIFT<8>.....23 15 4
SHIFT<9>.....23 15 4
SHORT CONST`.....28 8 7
SHOUT<0>.....15 13
SHOUT<10>.....15 13
SHOUT<11>.....15 13
SHOUT<12>.....15 13
SHOUT<13>.....15 13
SHOUT<14>.....15 13
SHOUT<15>.....15 13
SHOUT<1>.....15 13
SHOUT<2>.....15 13
SHOUT<3>.....15 13
SHOUT<4>.....15 13
SHOUT<5>.....15 13
SHOUT<6>.....15 13

SHOUT<7>.....15 13
SHOUT<8>.....15 13
SHOUT<9>.....15 13
SI<0>.....14 12 1
SI<10>.....14 12 3
SI<11>.....14 12 3
SI<12>.....14 12 3
SI<13>.....14 12 3
SI<14>.....14 12 3
SI<15>.....14 12 3
SI<1>.....14 12 1
SI<2>.....14 12 1
SI<3>.....14 12 1
SI<4>.....14 12 1
SI<5>.....14 12 1
SI<6>.....14 12 1
SI<7>.....14 12 1
SI<8>.....14 12 3
SI<9>.....14 12 3
SL/SR.....18 16 12
SL/SR`.....16 12
SL<0>.....40 27 13 12
SL<10>.....40 13 12
SL<11>.....40 13 12
SL<12>.....40 13 12
SL<13>.....40 13 12
SL<14>.....40 13 12
SL<15>.....40 13 12
SL<16>.....40 13 12
SL<17>.....40 13 12
SL<18>.....40 13 12
SL<19>.....40 13 12
SL<1>.....40 27 13 12
SL<20>.....40 13 12
SL<21>.....40 13 12
SL<22>.....40 13 12
SL<23>.....40 13 12
SL<24>.....40 13 12
SL<25>.....40 13 12
SL<26>.....40 13 12
SL<27>.....40 13 12
SL<28>.....40 13 12
SL<29>.....40 13 12
SL<2>.....40 27 13 12
SL<30>.....40 13 12
SL<3>.....40 27 13 12
SL<4>.....40 13 12
SL<5>.....40 13 12
SL<6>.....40 13 12
SL<7>.....40 13 12
SL<8>.....40 13 12
SL<9>.....40 13 12

SP<0>.....41
SP<1>.....41
SP<2>.....41
SRC BIT<0>.....19 16
SRC BIT<1>.....19 16
SRC BIT<2>.....19 16
SRC BIT<3>.....19 16
SRC FIFO CLR`.....16
SRC QUAD.....18
SRC WRD<0>`.....18 16
SRC WRD<1>`.....18 16
STK CLK ENB H.....39 26
STK EMP`.....39 4
STK RESET`.....39 26
STK WE.....39 26
TIME<0>`.....20
TIME<1>`.....20
U WR A`.....38 34 28
U WR B`.....36 35 28
U WR C`.....37 33 28
U<0>.....35 32 25
U<10>.....34 32 25
U<11>.....34 32 25
U<12>.....34 32 25
U<13>.....34 32 25
U<14>.....34 32 25
U<15>.....34 32 25
U<16>.....36 32 25
U<17>.....36 32 25
U<18>.....36 32 25
U<19>.....36 32 25
U<1>.....35 32 25
U<20>.....36 32 25
U<21>.....36 32 25
U<22>.....38 32 25
U<23>.....38 32 25
U<24>.....38 32 25
U<25>.....38 32 25
U<26>.....36 32 25
U<27>.....38 32 25
U<28>.....36 32 25
U<29>.....38 32 25
U<2>.....35 32 25
U<30>.....38 32 25
U<31>.....38 32 25
U<32>.....37 32 25
U<33>.....37 32 25
U<34>.....37 32 25
U<35>.....37 32 25
U<36>.....37 32 25
U<37>.....37 32 25
U<38>.....37 32 25

U<39>.....37 32 25
U<3>.....35 32 25
U<40>.....33 32 25
U<41>.....33 32 25
U<42>.....33 32 25
U<43>.....33 32 25
U<44>.....33 32 25
U<45>.....33 32 25
U<46>.....33 32 25
U<47>.....33 32 25
U<4>.....35 32 25
U<5>.....35 32 25
U<6>.....35 32 25
U<7>.....35 32 25
U<8>.....34 32 25
U<9>.....34 32 25
UA<0>A`.....38 37 36 32 24
UA<0>B`.....35 34 33 32 24
UA<10>A`.....38 37 36 24
UA<10>B`.....35 34 33 24
UA<11>A`.....38 37 36 24 17
UA<11>B`.....35 34 33 24
UA<12>A`.....41 38 37 36
UA<12>B`.....41 35 34 33
UA<13>A`.....41 38 37 36
UA<13>B`.....41 35 34 33
UA<1>A`.....38 37 36 32 24
UA<1>B`.....35 34 33 32 24
UA<2>A`.....38 37 36 32 24
UA<2>B`.....35 34 33 32 24
UA<3>A`.....38 37 36 32 24
UA<3>B`.....35 34 33 32 24
UA<4>A`.....38 37 36 32 24
UA<4>B`.....35 34 33 32 24
UA<5>A`.....38 37 36 32 24
UA<5>B`.....35 34 33 32 24
UA<6>A`.....38 37 36 32 24
UA<6>B`.....35 34 33 32 24
UA<7>A`.....38 37 36 32 24
UA<7>B`.....35 34 33 32 24
UA<8>A`.....38 37 36 32 24
UA<8>B`.....35 34 33 32 24
UA<9>A`.....38 37 36 24
UA<9>B`.....35 34 33 24
UNLD.....28 12
UPROC INTR L.....30
UUA<0>.....45 24 22
UUA<10>.....45 24 22
UUA<11>.....45 24 22
UUA<12>.....45 41 22
UUA<13>.....45 41 22
UUA<1>.....45 24 22

UUA<2>.....45 24 22
UUA<3>.....45 24 22
UUA<4>.....45 24 22
UUA<5>.....45 24 22
UUA<6>.....45 24 22
UUA<7>.....45 24 22
UUA<8>.....45 24 22
UUA<9>.....45 24 22
UW<0>.....38 37 36 27 9
UW<10>.....35 34 33 9
UW<11>.....35 34 33 9
UW<12>.....35 34 33 9
UW<13>.....35 34 33 9
UW<14>.....35 34 33 9
UW<15>.....35 34 33 26 9
UW<1>.....38 37 36 9
UW<2>.....38 37 36 9
UW<3>.....38 37 36 9
UW<4>.....38 37 36 9
UW<5>.....38 37 36 9
UW<6>.....38 37 36 9
UW<7>.....38 37 36 27 9
UW<8>.....35 34 33 9
UW<9>.....35 34 33 9
VEC<0>.....30 23
VEC<1>.....30 23
VEC<2>.....30 23
W.....29 25
WID BITS<0>.....19 16
WID BITS<1>.....19 16
WID BITS<2>.....19 16
WID BITS<3>.....19 16
WID WRD<0>`.....18 16
WID WRD<1>`.....18 16
WR NOW`.....30 28 27
WR OP`.....29 3 1
WR RAM`.....29 8 7 6 5 3 1
WRCS.....28 26
WRCS<0>.....28 26
WRCS<1>.....28 26
X ADDR<0>.....43 31 5 3 1
X ADDR<1>.....43 31 5 3 1
X ADDR<2>.....43 31 5 3 1
X ADDR<3>.....43 31 5 3 1
X ADDR<4>.....43 31 5 3 1
X ADDR<5>.....43 31 5 3 1
X ADDR<6>.....43 31 5 3 1
X ADDR<7>.....43 31 5 3 1
X INT INTR L.....30
X<0>.....43 25
X<1>.....43 25
X<2>.....43 25

X<3>.....43 25
X<4>.....43 25
X<5>.....43 25
X<6>.....43 25
X<7>.....43 25
Y ADDR<0>.....44 31
Y ADDR<1>.....44 31
Y ADDR<2>.....44 31
Y ADDR<3>.....44 31
Y ADDR<4>.....44 31
Y ADDR<5>.....44 31
Y ADDR<6>.....44 31
Y ADDR<7>.....44 31
Y INTR L.....30
Y<0>.....44 25 23 6
Y<1>.....44 25 23 6
Y<2>.....44 25 23 6
Y<3>.....44 25 23 6
Y<4>.....44 25 23 6
Y<5>.....44 25 23 6
Y<6>.....44 25 6
Y<7>.....44 25 6
YA<0>`.....31 8 7 6
YA<1>`.....31 8 7 6
YA<2>`.....31 8 7 6
YA<3>`.....31 8 7 6
YA<4>`.....31 8 7 6
YA<5>`.....31 8 7 6
YA<6>`.....31 8 7 6
YA<7>`.....31 8 7 6
Z80 RDY INT L.....30
Z<0>.....31 25 21 19 16 7
Z<1>.....31 25 21 19 16 7
Z<2>.....31 25 21 19 16 7
Z<3>.....31 25 21 19 16 7
Z<4>.....31 25 21 19 16 7
Z<5>.....31 25 21 19 16 7
Z<6>.....31 25 21 19 16 7
Z<7>.....31 28 25 21 19 7
ZERO BANK.....41

This Run Was made using the following files:

111332.PART
a45.WL
a44.WL
a43.WL
a42.WL
a41.WL
a40.WL
a39.WL
a38.WL
a37.WL
a36.WL
a35.WL
a34.WL
a33.WL
a32.WL
a31.WL
a30.WL
a29.WL
a28.WL
a27.WL
a26.WL
a25.WL
a24.WL
a23.WL
a22.WL
a21.WL
a20.WL
a19.WL
a18.WL
a17.WL
a16.WL
a15.WL
a14.WL
a13.WL
a12.WL
a11.WL
a10.WL
a09.WL
a08.WL
a07.WL
a06.WL
a05.WL
a04.WL
a03.WL
a02.WL
a01.WL

Number Of Nets = 948
Begin Wirelist

1: U224-1 U80-19 U81-19 U139-2 U139-4
1: U139-8 U139-6 U139-15 U139-17 U139-13
1: U139-11 U82-19 U111-19 U244-1 U253-2
1: U253-4 U253-8 U253-6 U253-15 U253-17
1: U253-13 U253-11 U254-2 U254-4 U254-8
1: U146-13 U146-11 U146-15 U146-17 U113-19
1: U61-19 U62-19 U64-19 U63-19 U103-17
1: U103-15 U103-11 U103-13 U102-17 U102-15
1: U102-4 U102-6 U102-13 U102-11 U102-8
1: U102-2 U83-19 U143-1 U71-1 U56-1
1: U157-9 U134-13 U155-13 U176-13 U196-13
1: U114-13 U175-13 U115-13 U195-13 U194-13
1: U218-13 U217-13 U221-1 U219-1 U220-8
1: U241-8 U222-8 U223-8 U197-10 U242-10
1: U198-10 U199-10 U197-8 U242-8 U198-8
1: U199-8 U220-10 U241-10 U222-10 U223-10
1: U192-1 U254-19 U238-1 C160-2 U172-14
1: U172-13 U169-10 U169-8 U171-15 U171-16
1: U170-1 U166-19 U129-15 U174-21 U179-15
1: U180-15 U129-19 U214-15 U173-21 U173-20
1: U204-10 U204-8 U84-2 U112-29 U73-1
1: U78-1 U65-1 U112-13 U73-19 U78-19
1: U65-19 U60-1 U85-1 U41-1 U43-1 U55-1
1: U105-15 U229-5 U229-4 U149-4 U193-15
1: U150-15 U150-18 U188-15 U150-17 U150-16
1: U193-18 U193-17 U193-16 U186-11 U189-3
1: U165-1 U192-19 U104-15 U185-1 U251-5
1: U206-1 U209-1 U250-1 U99-15 U76-15
1: U182-11 U161-8 U161-6 U161-4 U161-2
1: U182-17 U182-15 U182-13 U225-19 U206-19
1: U233-6 U233-5 U233-4 U233-3 U233-10
1: U106-10 U106-8 U51-19 U68-11 U87-13
1: U87-2 U67-15 U70-15 U70-1 U89-2 U91-2
1: U151-1 .!GND

2: R8-2 U238-15 C159-2 .%C159-2

3: U232-6 J154-1 .%J154-1

4: R7-1 J197-1 R6-2 .%R6-2

5: C160-1 U238-2 R7-2 .%R7-2

6: U65-5 RS1-2 .%RS1-2

7: U65-3 RS1-3 .%RS1-3

8: U73-18 RS1-8 .%RS1-8

9: U65-9 RS1-9 .%RS1-9

10: U65-18 RS2-2	.%RS2-2
11: U65-7 RS2-4	.%RS2-4
12: U65-16 RS2-5	.%RS2-5
13: U65-14 RS2-7	.%RS2-7
14: U65-12 RS2-9	.%RS2-9
15: U73-7 RS4-2	.%RS4-2
16: U73-3 RS4-3	.%RS4-3
17: U73-5 RS4-5	.%RS4-5
18: U73-9 RS4-9	.%RS4-9
19: U78-16 RS5-2	.%RS5-2
20: U78-5 RS5-5	.%RS5-5
21: U73-14 RS5-7	.%RS5-7
22: U78-3 RS6-2	.%RS6-2
23: U78-7 RS6-6	.%RS6-6
24: U78-9 RS6-8	.%RS6-8
25: U78-12 RS6-9	.%RS6-9
26: U117-3 U106-11	.%U106-11
27: U90-5 U108-14	.%U108-14
28: U90-3 U108-18	.%U108-18
29: U136-18 U137-14 U116-13	.%U116-13
30: U136-17 U138-13 U116-14	.%U116-14
31: U136-14 U137-13 U116-17	.%U116-17
32: U136-13 U138-15 U116-18	.%U116-18
33: U136-7 U137-15 U116-4	.%U116-4
34: U136-3 U137-12 U116-8	.%U116-8
35: U135-11 U117-11 U178-11 U208-6 U118-11	
35:	.%U118-11

36: U228-1 U163-1 U121-1 U233-14 U226-1
36: U125-1 .%U125-1

37: U228-13 U163-13 U121-13 U233-11 U226-13
37: U125-13 .%U125-13

38: U228-14 U163-14 U121-14 U233-12 U226-14
38: U125-14 .%U125-14

39: U228-15 U163-15 U121-15 U233-13 U226-15
39: U125-15 .%U125-15

40: U228-2 U163-2 U121-2 U231-6 U226-2
40: U125-2 .%U125-2

41: U228-3 U163-3 U121-3 U130-6 U231-4
41: U226-3 U125-3 .%U125-3

42: U147-6 U127-1 .%U127-1

43: U126-3 U128-2 U127-2 U129-1 .%U129-1

44: U126-14 U128-15 U127-15 U129-16 .%U129-16

45: U126-17 U128-16 U127-16 U129-17 .%U129-17

46: U126-18 U128-19 U127-19 U129-18 .%U129-18

47: U126-4 U128-5 U127-5 U129-2 .%U129-2

48: U126-7 U128-6 U127-6 U129-3 .%U129-3

49: U126-8 U128-9 U127-9 U129-4 .%U129-4

50: U126-13 U128-12 U127-12 U129-5 .%U129-5

51: U148-3 U129-6 .%U129-6

52: U148-4 U129-7 .%U129-7

53: U148-7 U129-8 .%U129-8

54: U148-8 U129-9 .%U129-9

55: U150-7 U131-4 .%U131-4

56: U236-9 U131-9 .%U131-9

57: U106-14 U135-18 .%U135-18

58: U116-7 U136-4 U138-12 .%U138-12

59: U116-3 U136-8 U138-14	.%U138-14
60: U128-1 U147-5	.%U147-5
61: U150-9 U149-1	.%U149-1
62: U150-11 U149-2	.%U149-2
63: U150-13 U149-5	.%U149-5
64: U149-3 U150-12	.%U150-12
65: U91-18 U151-18	.%U151-18
66: U156-3 U177-8 U157-12	.%U157-12
67: U156-14 U177-17 U157-13	.%U157-13
68: U177-13 U156-18 U157-14	.%U157-14
69: U156-7 U177-4 U157-15	.%U157-15
70: U156-4 U177-7 U158-12	.%U158-12
71: U156-17 U177-14 U158-13	.%U158-13
72: U156-8 U177-3 U158-14	.%U158-14
73: U156-13 U177-18 U158-15	.%U158-15
74: U232-4 U167-2	.%U167-2
75: U170-18 U169-11	.%U169-11
76: U170-14 U169-13	.%U169-13
77: U170-13 U169-14	.%U169-14
78: U172-9 U170-17	.%U170-17
79: U171-6 U170-3	.%U170-3
80: U171-7 U170-4	.%U170-4
81: U171-8 U170-7	.%U170-7
82: U171-9 U170-8	.%U170-8
83: U170-9 U171-1	.%U171-1
84: U170-6 U171-2	.%U171-2

85: U214-12 U204-4 U173-5	.%U173-5
86: U214-9 U204-7 U173-6	.%U173-6
87: U214-7 U204-6 U173-7	.%U173-7
88: U214-4 U204-5 U173-8	.%U173-8
89: U180-17 U126-16 U179-17 U174-10	.%U174-10
90: U180-16 U126-15 U179-16 U174-11	.%U174-11
91: U180-5 U126-12 U179-5 U174-13	.%U174-13
92: U180-4 U126-9 U179-4 U174-14	.%U174-14
93: U180-3 U126-6 U179-3 U174-15	.%U174-15
94: U180-2 U126-5 U179-2 U174-16	.%U174-16
95: U180-1 U126-2 U179-1 U174-17	.%U174-17
96: U180-18 U126-19 U179-18 U174-9	.%U174-9
97: U207-3 U185-18	.%U185-18
98: U187-4 U186-18	.%U186-18
99: U186-16 U187-12	.%U187-12
100: U186-17 U187-13	.%U187-13
101: U186-14 U187-3	.%U187-3
102: U192-5 U189-12	.%U189-12
103: U168-4 U192-14	.%U192-14
104: U168-3 U192-16	.%U192-16
105: U189-13 U192-3	.%U192-3
106: U73A-6 U203-9	.%U203-9
107: U205-3 U204-14	.%U204-14
108: U73A-8 U205-10	.%U205-10
109: U204-13 U205-4 U205-5	.%U205-5
110: U205-13 U206-14	.%U206-14

111: U209-9 U206-8	.%U206-8
112: U208-2 U207-13	.%U207-13
113: U207-8 U208-5	.%U208-5
114: U210-6 U210-9	.%U210-9
115: U211-3 U211-8 U211-2	.%U211-2
116: U212-3 U212-4	.%U212-4
117: U73A-3 U212-5	.%U212-5
118: U209-7 U212-8	.%U212-8
119: U215-12 U214-14 U214-13	.%U214-13
120: U237-3 U214-6	.%U214-6
121: U214-10 U215-8	.%U215-8
122: U243-3 U220-13	.%U220-13
123: U204-1 U173-2 U227-12	.%U227-12
124: U173-14 U227-13	.%U227-13
125: U173-15 U227-14	.%U227-14
126: U204-17 U173-1 U227-15	.%U227-15
127: U204-16 U173-23 U227-16	.%U227-16
128: U173-16 U227-17	.%U227-17
129: U173-17 U227-18	.%U227-18
130: U204-15 U173-22 U227-19	.%U227-19
131: U237-2 U227-2	.%U227-2
132: U214-3 U227-5	.%U227-5
133: U205-6 U231-1	.%U231-1
134: U237-8 U233-7	.%U233-7
135: U213-6 U191-1 U235-1	.%U235-1
136: U237-11 U236-11	.%U236-11

137: C159-1 U238-14	.%U238-14
138: U243-14 U241-13	.%U241-13
139: U243-4 U241-14	.%U241-14
140: U243-8 U242-13	.%U242-13
141: U243-18 U242-14	.%U242-14
142: U237-6 U260-1 U243-1	.%U243-1
143: U197-13 U243-13	.%U243-13
144: U197-14 U243-17	.%U243-17
145: U220-14 U243-7	.%U243-7
146: U251-10 U250-19	.%U250-19
147: U251-2 U250-6	.%U250-6
148: U251-1 U250-9	.%U250-9
149: U250-16 U251-11	.%U251-11
150: U250-15 U251-12	.%U251-12
151: U250-12 U251-13	.%U251-13
152: U250-5 U251-3	.%U251-3
153: U250-2 U251-4	.%U251-4
154: U165-19 U254-11	.%U254-11
155: U66-1 U254-5	.%U254-5
156: U199-13 U260-13	.%U260-13
157: U222-13 U260-14	.%U260-14
158: U199-14 U260-17	.%U260-17
159: U198-14 U260-18	.%U260-18
160: U223-13 U260-3	.%U260-3
161: U222-14 U260-4	.%U260-4
162: U223-14 U260-7	.%U260-7

163: U198-13 U260-8 .%U260-8

164: RS3-4 U51-3 .%U51-3

165: RS3-1 U51-5 .%U51-5

166: RS3-8 U51-7 .%U51-7

167: RS3-9 U51-9 .%U51-9

168: U131-8 U254-15 U66-5 U66-10 U66-12
168: .%U66-12

169: U67-3 U68-12 .%U68-12

170: U67-2 U68-13 .%U68-13

171: U67-1 U68-14 .%U68-14

172: U70-11 U68-15 .%U68-15

173: U70-5 U68-16 .%U68-16

174: U67-8 U70-14 .%U70-14

175: U67-9 U70-2 .%U70-2

176: U90-2 U70-3 .%U70-3

177: U86-3 U72-1 .%U72-1

178: RS5-9 U73-12 .%U73-12

179: RS1-6 U73-16 .%U73-16

180: U95-13 U74-5 U94-10 U94-5 U74-9 U96-4
180: U96-10 U75-5 U75-9 .%U75-9

181: RS6-4 U78-14 .%U78-14

182: RS5-3 U78-18 .%U78-18

183: U86-11 U87-3 .%U87-3

184: U90-9 U87-7 .%U87-7

185: U91-8 U89-18 .%U89-18

186: U87-5 U90-1 .%U90-1

187: U70-13 U90-8 .%U90-8

```
188: U89-17 U91-11                          .%U91-11

189: U131-6 U95-6                           .%U95-6

190: U120-3 U95-1 U98-1 U93-10 U93-5 U119-2
190: U119-13 U120-10 U98-4                  .%U98-4

191: U80-17 U81-17 U82-17 U111-17 U113-17
191: U61-17 U62-17 U64-17 U63-17 R1-2
191: U83-17 U147-13 U147-10 U174-18 U174-19
191:                                        .+3A

192: U238-3 U236-10 U236-12 U173-18 U173-19
192: U112-32 U112-15 U110-1 R3-2 U229-6
192: U201-1 U89-9 U91-9                     .+3B

193: U213-5 R5-2 U236-1 U236-4 U207-11
193: U94-1 U74-2 U75-1 U75-2 U96-1 U96-2
193: U74-1 U94-2 U119-4 U93-1 U98-9 U98-2
193: U120-1 U119-10 U93-2 U120-5            .+3C

194: U85-9 U229-1 U188-12                   .A<0>

195: U85-12 U229-2 U188-14                  .A<1>

196: U85-15 U229-3 U188-13                  .A<2>

197: R4-2 U153-14 U152-14 U132-14 U133-14
197: U165-8                                 .A=B

198: U231-3 U213-1 U215-4 U130-10 U130-5
198: U237-10 U207-9                         .ABORT'

199: U153-8 U154-8 U152-8 U132-8 U133-8
199: U105-6                                 .ALU M

200: U191-3 U133-9 U258-17 U255-17 U246-17
200: U128-18                                .ALU Y<0>'

201: U235-7 U152-11 U259-7 U257-7 U249-7
201:                                        .ALU Y<10>'

202: U235-8 U152-13 U259-3 U257-3 U249-3
202:                                        .ALU Y<11>'

203: U153-9 U259-18 U257-18 U249-18         .ALU Y<12>'

204: U153-10 U259-8 U257-8 U249-8           .ALU Y<13>'

205: U153-11 U259-4 U257-4 U249-4           .ALU Y<14>'
```

206: U153-13 U259-14 U257-14 U249-14 .ALU Y<15>`

207: U143-8 U154-9 U256-14 .ALU Y<16>`

208: U143-7 U154-10 U256-8 .ALU Y<17>`

209: U143-4 U154-11 U256-13 .ALU Y<18>`

210: U143-3 U154-13 U256-17 .ALU Y<19>`

211: U191-4 U133-10 U258-13 U255-13 U246-13
211: U128-17 .ALU Y<1>`

212: U191-7 U133-11 U258-7 U255-7 U246-7
212: U128-14 .ALU Y<2>`

213: U191-8 U133-13 U258-3 U255-3 U246-3
213: U128-13 .ALU Y<3>`

214: U191-18 U132-9 U258-18 U255-18 U246-18
214: U128-8 .ALU Y<4>`

215: U191-14 U132-10 U258-8 U255-8 U246-8
215: U128-7 .ALU Y<5>`

216: U191-13 U132-11 U258-4 U255-4 U246-4
216: U128-4 .ALU Y<6>`

217: U191-17 U132-13 U258-14 U255-14 U246-14
217: U128-3 .ALU Y<7>`

218: U235-3 U152-9 U259-17 U257-17 U249-17
218: .ALU Y<8>`

219: U235-4 U152-10 U259-13 U257-13 U249-13
219: .ALU Y<9>`

220: U85-16 U105-4 .ALU<0>

221: U85-19 U105-3 .ALU<1>

222: U85-5 U105-2 .ALU<2>

223: U85-2 U105-1 .ALU<3>

224: U153-6 U154-6 U152-6 U132-6 U133-6
224: U105-11 .ALUF<0>

225: U153-5 U154-5 U152-5 U132-5 U133-5
225: U105-9 .ALUF<1>

226: U153-4 U154-4 U152-4 U132-4 U133-4

```
226: U105-8                                  .ALUF<2>

227: U153-3 U154-3 U152-3 U132-3 U133-3
227: U105-7                                  .ALUF<3>

228: U161-3 U80-16 U247-16 U245-5 U202-12
228: U140-3 U139-12 U133-2 U121-5            .AMUX<0>`

229: U82-12 U253-16 U252-2 U225-16 U254-16
229: U248-19 U152-21 U228-9                  .AMUX<10>`

230: U82-14 U253-18 U252-5 U254-18 U225-18
230: U248-16 U152-19 U228-11                 .AMUX<11>`

231: U111-16 U253-3 U252-6 U123-3 U202-3
231: U248-15 U153-2 U226-5                   .AMUX<12>`

232: U111-10 U253-5 U252-15 U123-5 U248-6
232: U202-5 U153-23 U226-7                   .AMUX<13>`

233: U111-12 U253-7 U252-9 U123-7 U248-12
233: U202-7 U153-21 U226-9                   .AMUX<14>`

234: U111-14 U253-9 U252-12 U123-9 U248-9
234: U202-9 U153-19 U165-3 U226-11           .AMUX<15>`

235: U113-16 U230-9 U146-3 U145-14 U154-2
235: U125-5                                  .AMUX<16>`

236: U113-10 U230-6 U146-5 U145-15 U154-23
236: U125-7                                  .AMUX<17>`

237: U113-12 U230-5 U146-7 U145-16 U154-21
237: U125-9                                  .AMUX<18>`

238: U113-14 U230-2 U146-9 U145-17 U154-19
238: U125-11                                 .AMUX<19>`

239: U161-5 U80-10 U247-19 U245-2 U202-14
239: U140-5 U139-14 U133-23 U121-7           .AMUX<1>`

240: U161-7 U80-12 U247-2 U245-19 U140-7
240: U139-16 U202-16 U133-21 U121-9          .AMUX<2>`

241: U161-9 U80-14 U247-5 U245-16 U202-18
241: U140-9 U139-18 U133-19 U121-11          .AMUX<3>`

242: U182-12 U81-16 U247-6 U245-15 U185-3
242: U140-12 U139-3 U132-2 U163-5            .AMUX<4>`

243: U182-14 U81-10 U247-15 U245-6 U185-5
243: U140-14 U139-5 U132-23 U163-7           .AMUX<5>`
```

```
244: U182-16 U81-12 U247-9 U245-12 U185-7
244: U140-16 U139-7 U132-21 U163-9      .AMUX<6>`

245: U182-18 U81-14 U247-12 U245-9 U185-9
245: U140-18 U139-9 U132-19 U163-11     .AMUX<7>`

246: U82-16 U253-12 U252-16 U254-12 U225-12
246: U248-5 U152-2 U228-5               .AMUX<8>`

247: U82-10 U253-14 U252-19 U254-14 U225-14
247: U248-2 U152-23 U228-7              .AMUX<9>`

248: U145-7 U105-12 U186-2 U106-15      .ARITH X

249: U145-8 U105-13 U186-3 U106-17      .ARITH Y

250: U253-19 U253-1 U188-5              .AZRO<15:8>`

251: U146-19 U188-6                     .AZRO<19:16>`

252: U139-19 U139-1 U188-4              .AZRO<7:0>`

253: U61-18 U62-18 U64-18 U63-18 U83-18
253: U110-2 U86-10 U86-4                .B

254: U160-14 U181-14 U159-14 U200-14 U208-8
254: U210-5                             .B TIME<0>`

255: U160-13 U181-13 U159-13 U200-13 U231-8
255: U210-4                             .B TIME<1>`

256: U84-17 U70-12 U87-6 U72-5          .BANK<0>

257: U84-15 U70-4 U87-4 U72-2           .BANK<1>

258: U62-16 U101-3 U133-1               .BMUX<0>`

259: U63-12 U123-16 U102-7 U152-20      .BMUX<10>`

260: U63-14 U123-18 U102-9 U152-18      .BMUX<11>`

261: U64-16 U103-3 U124-12 U153-1       .BMUX<12>`

262: U64-10 U103-5 U124-14 U153-22      .BMUX<13>`

263: U64-12 U103-7 U124-16 U153-20      .BMUX<14>`

264: U64-14 U103-9 U124-18 U153-18 U165-4
264:                                    .BMUX<15>`

265: U123-17 U83-16 U102-14 U154-1      .BMUX<16>`
```

```
266: U123-15 U83-10 U102-18 U154-22      .BMUX<17>'
267: U123-13 U83-12 U102-12 U154-20      .BMUX<18>'
268: U123-11 U102-16 U83-14 U154-18      .BMUX<19>'
269: U62-10 U101-5 U133-22               .BMUX<1>'
270: U62-12 U101-7 U133-20               .BMUX<2>'
271: U62-14 U101-9 U133-18               .BMUX<3>'
272: U61-16 U101-12 U132-1               .BMUX<4>'
273: U61-10 U101-14 U132-22              .BMUX<5>'
274: U61-12 U101-16 U132-20              .BMUX<6>'
275: U61-14 U101-18 U132-18              .BMUX<7>'
276: U63-16 U123-12 U102-3 U152-1        .BMUX<8>'
277: U63-10 U123-14 U102-5 U152-22       .BMUX<9>'
278: U150-8 U201-9                       .BPC:=
279: U202-8 U208-3 U201-14 U203-12       .BPC<0>
280: U208-4 U203-1                       .BPC<0>'
281: U160-5 U181-5 U202-6 U159-5 U200-5
281: U201-13                             .BPC<1>
282: U160-4 U181-4 U202-4 U159-4 U200-4
282: U201-12                             .BPC<2>
283: U202-2 U192-13 U201-11 U189-15 U205-1
283:                                     .BPC<3>
284: U192-7 U203-13 U203-2 U161-1 U182-19
284:                                     .BPC<3>'
285: U101-1 U101-19 U102-1 U110-3        .B'
286: U154-7 U153-16 U165-7               .C<15>
287: U154-16 U165-13                     .CARRY<19>
288: U157-19 U158-1 U137-19 U138-1 U171-12
288:                                     .CLK FIFO IN
```

```
289: U211-9 U212-6 U203-10                .CLK FIFO OUT

290: U255-11 U257-11 U256-11 U234-10      .CLK MA'R<5>

291: U224-11 U247-11 U244-11 U252-11 U230-11
291: U232-8                               .CLK MDOR

292: U260-11 U243-11 U234-8               .CLK-OR A

293: U249-11 U246-11 U221-11 U219-11 U234-6
293: U209-11                              .CLK-OR B

294: U237-12 U236-3 U165-11 U234-12       .CLK-OR C

295: U227-11 U234-4 U250-11               .CLK-OR D

296: U73A-4 U130-13 U77-4 U90-13 U130-2
296:                                      .CLK-16

297: U239-1 U77-10                        .CLK-26

298: U208-1 U77-6                         .CLK-36

299: U211-10 U234-1 U77-8                 .CLK-46

300: U237-5 U147-11 U148-11 U126-11 U95-5
300: U210-13 U92-6 U232-10 U73A-5 U240-11
300: U232-12 U213-11 U86-13               .CLK-4E

301: U157-1 U158-19 U137-1 U138-19 U240-3
301: U76-1 U99-1 U207-10                  .CLK-4F

302: U149-6 U207-5 U234-3 U234-5 U234-13
302: U234-9 U77-1 U240-6                  .CLK-4G

303: U211-11 U215-5 U213-2 U95-8 U207-1
303: U240-8 U130-4 U233-2 U86-2           .CLK-4J

304: U131-5 U130-9 U234-2                 .CLK-51R

305: U95-9 U232-1 U77-12                  .CLK-6

306: U239-2 U240-10 J176-1 U240-5 U240-9
306: U240-1 U240-12 U240-2 U240-4 U240-13
306:                                      .CLK-7R

307: U92-4 U90-12                         .CLK20R

308: U147-9 U73A-1                        .CLR FIFO L

309: U132-7 U142-12                       .CN+X
```

310: U152-7 U142-11 .CN+Y

311: U153-7 U142-9 .CN+Z

312: U133-7 U142-13 U105-14 .CN<0>

313: U41-9 U187-11 U189-11 .CND<0>

314: U41-6 U187-10 U189-10 .CND<1>`

315: U41-5 U187-9 U189-9 .CND<2>

316: U41-2 U185-8 U189-7 .CND<3>

317: U185-12 U187-7 .CND<3>`

318: U112-14 U187-6 U189-6 U67-4 .CONDITION`

319: U236-13 U212-9 U210-8 .CONT`

320: U185-13 U186-13 U187-15 .CRY

321: U254-3 J196-1 .DIAG INC

322: JB47-1 U66-4 U66-9 U66-2 U66-13 R2-2
322: .DIS USTORE L

323: J179-1 U250-7 .DISK INTR L

324: U206-4 U209-15 .DLY QUAL FIFO

325: U206-16 U73A-2 .DLY QUAL FIFO`

326: U239-3 U216-6 U216-11 .DON'T IO ENB

327: U198-4 U199-4 U242-4 U197-4 U220-4
327: U241-4 U222-4 U223-4 U170-19 .DON'T MASK

328: U108-13 U131-1 .DON'T PAGE`

329: U212-12 U209-5 .DON'T WRCS`

330: U164-19 U166-4 U174-2 .DST BITS<0>

331: U164-16 U166-3 U174-1 .DST BITS<1>

332: U164-15 U166-2 U174-23 .DST BITS<2>

333: U164-12 U166-1 U174-22 .DST BITS<3>

334: U170-5 U169-17 .DST QUAD

335: U164-9 U169-5 .DST WRD<0>`

336: U164-6 U169-4 .DST WRD<1>`

337: U219-16 U197-3 .DST<0>

338: U221-19 U223-3 .DST<10>

339: U221-5 U223-2 .DST<11>

340: U221-12 U198-3 .DST<12>

341: U221-15 U198-2 .DST<13>

342: U221-6 U222-3 .DST<14>

343: U221-9 U222-2 .DST<15>

344: U219-2 U197-2 .DST<1>

345: U219-19 U220-3 .DST<2>

346: U219-5 U220-2 .DST<3>

347: U219-12 U242-3 .DST<4>

348: U219-15 U242-2 .DST<5>

349: U219-6 U241-3 .DST<6>

350: U219-9 U241-2 .DST<7>

351: U221-16 U199-3 .DST<8>

352: U221-2 U199-2 .DST<9>

353: U66-3 U23-15 U17-15 U14-15 U10-15
353: U8-15 U7-15 .E BOOT ROM`

354: U245-1 U248-1 U229-13 .EIOB`

355: U170-12 U174-8 .EL

356: U247-1 U252-1 U229-12 .EMDO`

357: U84-19 U90-4 .ENB BANK`

358: U144-1 U104-4 .ENB DISPATCH`

359: U249-1 U246-1 U207-6 .ENB IODO`

360: U255-1 U257-1 U256-1 U232-11 .ENB MA`

```
361: U259-1 U258-1 U213-8                .ENB MDI'

362: U213-4 U193-14 U89-3 U91-3          .ENB MDR L

363: U230-1 U229-11                      .ENB MDX'

364: U162-19 U162-1 U104-2 U203-5        .ENB NEXT INST'

365: U160-11 U181-11 U203-3              .ENB OP<0>'

366: U159-11 U200-11 U203-11             .ENB OP<1>'

367: U109-1 U131-3                       .ENB PAGE'

368: U66-6 U9-11 U1-11 U4-11 U32-11 U28-11
368: U29-11 U6-11 U35-11 U49-11 U48-11
368: U15-11 U11-11 U42-11 U50-11 U19-11
368: U39-11                              .ENB RAM' A

369: U66-11 U36-11 U26-11 U5-11 U34-11
369: U52-11 U27-11 U33-11 U59-11 U46-11
369: U20-11 U24-11 U21-11 U16-11 U18-11
369: U22-11 U44-11                       .ENB RAM' B

370: U66-8 U31-11 U3-11 U54-11 U53-11
370: U57-11 U30-11 U2-11 U58-11 U38-11
370: U45-11 U25-11 U12-11 U37-11 U13-11
370: U47-11 U40-11                       .ENB RAM' C

371: U141-1 U183-1 U108-16               .ENB SHIFT TO JMUX'

372: U140-19 U140-1 U202-19 U225-1 U229-15
372:                                     .ENB SHIFT'

373: U229-7 U231-5                       .ENB STK'

374: U202-1 U185-19 U254-1 U123-19 U145-11
374: U229-10                             .ENB UST'

375: U84-1 U104-5                        .ENB VECTOR'

376: U122-1 U122-19 U108-15              .ENB Y'

377: U103-1 U124-19 U90-6                .ENB Z ADDR'

378: U144-19 U104-7                      .ENB Z OP FILL'

379: U146-1 U104-6                       .ENB Z VEC FILL'

380: U185-15 U186-19 U187-14             .EQL
```

381: U170-15 U174-7 .ER

382: U80-18 U81-18 U111-18 U82-18 U113-18
382: U229-9 .EX`

383: U110-15 U150-19 U193-19 U188-10 U131-12
383: U231-13 .F<0>

384: U215-2 U110-14 U216-12 .F<0>`

385: U110-10 U150-5 U193-5 U188-11 U131-13
385: .F<1>

386: U215-1 U110-11 U216-1 U231-12 .F<1>`

387: U157-11 U172-6 .FIFO EVEN/ODD

388: U157-17 U210-2 .FIFO OR

389: U133-17 U142-3 .G<0>`

390: U132-17 U142-1 .G<1>`

391: U152-17 U142-14 .G<2>`

392: U153-17 U142-5 .G<3>`

393: U204-11 U165-18 .GRANT

394: J171-1 U254-9 .GRANT DMA

395: U110-7 U104-10 U67-19 .H

396: J148-1 U231-2 .HOLD OFF L

397: U205-9 U206-12 .HOLD VICTIM

398: U237-1 U110-6 .H`

399: U227-3 J178-1 .I/O MEM RQST

400: U227-4 J153-1 .I/O MEM WR

401: U254-17 U236-5 .INC DDS

402: U74-4 U98-13 U97-2 .INDEX<0>

403: U75-10 U120-2 U97-5 .INDEX<1>

404: U75-4 U98-5 U97-6 .INDEX<2>

405: U96-9 U120-9 U97-9 .INDEX<3>

406: U96-5 U119-1 U97-12 .INDEX<4>

407: U74-10 U119-3 U97-15 .INDEX<5>

408: U94-4 U93-4 U97-16 .INDEX<6>

409: U94-9 U93-9 U97-19 .INDEX<7>

410: U237-13 U238-13 U254-13 .INIT

411: U254-7 J72-1 .INIT L

412: U232-5 U190-1 U168-1 U164-1 U167-1
412: U238-4 U227-1 U69-1 U97-1 .INIT`

413: U209-3 U251-15 .INT P

414: U189-2 U209-2 .INTR PEND

415: J69-1 U225-3 .IOA<0>

416: J169-1 U225-5 .IOA<1>

417: J68-1 U225-7 .IOA<2>

418: U225-9 J168-1 .IOA<3>

419: J67-1 U206-3 .IOA<4>

420: J167-1 U206-5 .IOA<5>

421: J66-1 U206-7 .IOA<6>

422: J166-1 U206-9 .IOA<7>

423: U245-11 U248-11 U216-8 U185-2 J71-1
423: .IOB ENB L

424: J64-1 U245-4 U246-16 .IOD<0>

425: U248-18 J58-1 U249-6 .IOD<10>

426: U248-17 J158-1 U249-2 .IOD<11>

427: U248-14 J57-1 U249-19 .IOD<12>

428: U248-7 J157-1 U249-9 .IOD<13>

429: U248-13 J56-1 U249-5 .IOD<14>

430: U248-8 J156-1 U249-15 .IOD<15>

```
431: J164-1 U245-3 U246-12                .IOD<1>

432: J63-1 U245-18 U246-6                 .IOD<2>

433: J163-1 U245-17 U246-2                .IOD<3>

434: J62-1 U245-14 U246-19                .IOD<4>

435: J162-1 U245-7 U246-9                 .IOD<5>

436: J61-1 U245-13 U246-5                 .IOD<6>

437: J161-1 U245-8 U246-15                .IOD<7>

438: U248-4 J59-1 U249-16                 .IOD<8>

439: U248-3 J159-1 U249-12                .IOD<9>

440: U144-3 U103-12 U100-5 U141-2 U112-34
440:                                      .J MUX<0>

441: U144-7 U109-9 U107-12 U151-7 U122-7
441: U183-6 U112-25                       .J MUX<10>

442: U144-9 U109-15 U107-15 U151-9 U122-14
442: U183-9 U112-27                       .J MUX<11>

443: U107-16 U122-5 U84-3 U183-12 U70-10
443: U68-8                                .J MUX<12>

444: U107-19 U122-16 U84-5 U183-15 U68-7
444: U70-6                                .J MUX<13>

445: U144-5 U124-9 U100-16 U141-5 U112-36
445:                                      .J MUX<1>

446: U144-12 U162-3 U103-14 U100-2 U141-6
446: U84-12 U112-38                       .J MUX<2>

447: U144-14 U162-18 U124-7 U100-19 U141-9
447: U84-14 U112-40                       .J MUX<3>

448: U144-16 U162-5 U103-16 U100-9 U141-12
448: U84-16 U112-2                        .J MUX<4>

449: U144-18 U162-16 U124-5 U100-12 U141-15
449: U84-18 U112-4                        .J MUX<5>

450: U162-7 U146-18 U103-18 U107-2 U141-16
450: U112-17                              .J MUX<6>
```

```
451: U162-14 U146-16 U124-3 U107-5 U141-19
451: U112-19                              .J MUX<7>

452: U162-9 U146-14 U107-6 U109-6 U151-3
452: U122-9 U183-2 U112-21                .J MUX<8>

453: U162-12 U146-12 U109-12 U107-9 U151-5
453: U122-12 U183-5 U112-23               .J MUX<9>

454: U112-12 U69-15 U104-11 U67-18        .JMP<0>

455: U112-11 U69-10 U104-12 U67-17        .JMP<1>

456: U112-9 U69-7 U104-13 U67-16          .JMP<2>

457: U112-8 U69-2 U104-14 U67-5           .JMP<3>

458: U211-12 U136-11 U177-11              .L SHIFT IN<0>'

459: U156-11 U116-11 U211-6               .L SHIFT IN<1>'

460: U143-19 U144-8                       .L SHIFT<0>

461: U143-16 U144-6                       .L SHIFT<1>

462: U143-15 U144-4                       .L SHIFT<2>

463: U143-12 U144-2                       .L SHIFT<3>

464: U172-4 U171-4 U169-16 U204-3 U173-4
464: U227-9                               .L TIME<0>'

465: U172-3 U171-3 U169-15 U214-1 U173-3
465: U204-2 U227-6                        .L TIME<1>'

466: U145-9 U165-2 U186-8 U106-7          .LA<15>

467: U145-2 U165-9 U186-5                 .LA=B

468: U211-1 U211-5 U190-2                 .LATCH ON

469: U191-11 U235-11 U143-11 U259-11 U258-11
469: U95-10                               .LATCH R

470: U145-12 U165-5 U186-7 U106-4         .LB<15>

471: U145-13 U165-6 U186-6 U209-13        .LC<15>

472: U165-12 U209-17                      .LC<19>'

473: U190-11 U149-15                      .LD C
```

```
474: U164-11 U149-13                    .LD D

475: U149-9 U97-11                      .LD INDEX

476: U145-18 U150-14 U106-16            .LD MDR

477: U109-11 U141-11 U183-11 U112-31 U69-9
477: U55-11 U41-11 U43-11 U215-6 JC25-1
477: U68-1 U72-9                        .LD MIR` A

478: U56-11 U71-11 U170-11 U85-11 U60-11
478: U110-9 U186-1 U201-2 U213-12       .LD MIR` B

479: U207-2 U210-10 U209-6              .LD OP

480: U68-6 U67-7                        .LD REG

481: U167-11 U149-14                    .LD S

482: U147-3 U127-11 U128-11 U95-4       .LD SHIFT CMD

483: U100-11 U107-11 U210-11 U88-11 U79-11
483:                                    .LD VICTIM`

484: U138-18 U137-18 U158-18 U157-18 U168-11
484: U149-12                            .LD W

485: U210-1 U172-10                     .LEFTOVER

486: J84-1 U250-14                      .LINE COUNT INTR L

487: U232-9 U209-19                     .LMDO VALID H

488: U149-7 U234-11                     .LOAD MA

489: U123-1 U124-1 U86-6                .LONG CONST`

490: U151-19 U131-11 U131-2             .LONG JUMP`

491: U185-11 U186-15 U187-2             .LSS

492: U255-16 J37-1                      .MADR<0>

493: U257-6 J31-1                       .MADR<10>

494: U257-2 J131-1                      .MADR<11>

495: U257-19 J29-1                      .MADR<12>

496: U257-9 J129-1                      .MADR<13>

497: U257-5 J28-1                       .MADR<14>
```

498: U257-15 J128-1 .MADR<15>

499: J27-1 U256-15 .MADR<16>

500: J127-1 U256-9 .MADR<17>

501: J26-1 U256-12 .MADR<18>

502: J126-1 U256-16 .MADR<19>

503: U255-12 J137-1 .MADR<1>

504: U255-6 J36-1 .MADR<2>

505: U255-2 J136-1 .MADR<3>

506: U255-19 J34-1 .MADR<4>

507: U255-9 J134-1 .MADR<5>

508: U255-5 J33-1 .MADR<6>

509: U255-15 J133-1 .MADR<7>

510: U257-16 J32-1 .MADR<8>

511: U257-12 J132-1 .MADR<9>

512: U168-5 U105-17 U106-1 .MD INSTR<0>

513: U168-2 U105-18 U106-2 .MD INSTR<1>

514: U258-16 J14-1 U243-16 .MDI<0>

515: J8-1 U259-6 U260-6 .MDI<10>

516: J108-1 U259-2 U260-2 .MDI<11>

517: J7-1 U259-19 U260-19 .MDI<12>

518: J107-1 U259-9 U260-9 .MDI<13>

519: J6-1 U259-5 U260-5 .MDI<14>

520: J106-1 U259-15 U260-15 .MDI<15>

521: U258-12 J114-1 U243-12 .MDI<1>

522: U258-6 J13-1 U243-6 .MDI<2>

523: U258-2 J113-1 U243-2 .MDI<3>

524: U258-19 J12-1 U243-19 .MDI<4>

525: U258-9 J112-1 U243-9 .MDI<5>

526: U258-5 J11-1 U243-5 .MDI<6>

527: U258-15 J111-1 U243-15 .MDI<7>

528: J9-1 U259-16 U260-16 .MDI<8>

529: J109-1 U259-12 U260-12 .MDI<9>

530: J141-1 U209-18 .MDO VALID H

531: U224-17 J24-1 U247-17 U230-8 .MDO<0>

532: U244-3 U252-3 J18-1 .MDO<10>

533: U244-4 U252-4 J118-1 .MDO<11>

534: U244-7 U252-7 J17-1 .MDO<12>

535: U244-8 U252-14 J117-1 .MDO<13>

536: U244-14 U252-8 J16-1 .MDO<14>

537: U244-13 U252-13 J116-1 .MDO<15>

538: U224-18 J124-1 U247-18 U230-7 .MDO<1>

539: U224-3 J23-1 U247-3 U230-4 .MDO<2>

540: U224-4 J123-1 U247-4 U230-3 .MDO<3>

541: U224-7 J22-1 U247-7 .MDO<4>

542: U224-8 J122-1 U247-14 .MDO<5>

543: U224-14 J21-1 U247-8 .MDO<6>

544: U224-13 J121-1 U247-13 .MDO<7>

545: U244-17 U252-17 J19-1 .MDO<8>

546: U244-18 U252-18 J119-1 .MDO<9>

547: U105-19 U91-17 .MDR<0>

548: U106-3 U89-8 .MDR<15>

549: U106-13 U89-19 U91-19 .MDRI<0>

550: U106-12 U89-1 U91-1 .MDRI<1>

551: U231-11 U232-2 .MEM FUNC

552: U204-12 U232-13 U213-9 .MEM RDING MA/MD

553: U173-13 J181-1 .MEM RQST ST<0>

554: U173-11 J182-1 .MEM RQST ST<1>

555: U173-10 J183-1 .MEM RQST ST<2>

556: U197-1 U179-14 .MSK<0>

557: U223-1 U180-12 .MSK<10>

558: U223-17 U180-11 .MSK<11>

559: U198-1 U180-9 .MSK<12>

560: U198-17 U180-8 .MSK<13>

561: U222-1 U180-7 .MSK<14>

562: U222-17 U180-6 .MSK<15>

563: U197-17 U179-13 .MSK<1>

564: U220-1 U179-12 .MSK<2>

565: U220-17 U179-11 .MSK<3>

566: U242-1 U179-9 .MSK<4>

567: U242-17 U179-8 .MSK<5>

568: U241-1 U179-7 .MSK<6>

569: U241-17 U179-6 .MSK<7>

570: U199-1 U180-14 .MSK<8>

571: U199-17 U180-13 .MSK<9>

572: U145-1 U149-10 U89-12 U91-12 .MUL STEP

573: J39-1 U250-8 RS7-10 .NET INTR L

574: U201-7 U201-10 U203-6 .NEXT INST OP

575: U182-1 U161-19 U229-14 U203-4 U206-6

```
575:                                        .NEXT OP'

576: U90-10 U86-5                           .NOP SF

577: U90-11 U108-17 U86-9                   .NOP SF'

578: U189-14 U209-16                        .OLD CARRY<19>'

579: U105-5 U209-12                         .OLD CARRY'

580: U157-8 U170-16 U172-5                  .OLD EVEN/ODD

581: U160-6 U161-17 U159-6 U162-17 U161-12
581:                                        .OP<0>

582: U160-9 U161-15 U159-9 U162-2 U161-14
582:                                        .OP<1>

583: U160-10 U161-13 U159-10 U162-15 U161-16
583:                                        .OP<2>

584: U160-7 U161-11 U159-7 U162-4 U161-18
584:                                        .OP<3>

585: U182-8 U181-6 U200-6 U162-13 U182-3
585:                                        .OP<4>

586: U182-6 U181-9 U200-9 U162-6 U182-5
586:                                        .OP<5>

587: U182-4 U181-10 U200-10 U162-11 U182-7
587:                                        .OP<6>

588: U182-2 U181-7 U200-7 U162-8 U182-9
588:                                        .OP<7>

589: U185-17 U186-12 U187-1                 .OVF

590: U210-12 U205-8 U209-8                  .P HOLD VICTIM'

591: U133-15 U142-4                         .P<0>'

592: U132-15 U142-2                         .P<1>'

593: U152-15 U142-15                        .P<2>'

594: U153-15 U142-6                         .P<3>'

595: J83-1 U250-18                          .PAR INTR L

596: U190-12 U171-17 U169-3                 .PHASE<0>
```

```
597: U190-9 U171-18 U169-2                .PHASE<1>

598: U190-6 U171-19                       .PHASE<2>

599: U190-5 U212-1                        .PHASE<4>

600: U193-8 U233-1                        .POP'

601: U205-2 U188-1                        .PROC NEEDS MDI

602: U86-12 U67-14 U68-5                  .PUSH

603: U212-2 U169-12 U209-14               .QUAL FIFO

604: U80-15 U145-3 U62-15 U71-8 U191-2
604: U168-18 U167-18 U164-18 U121-4 U178-18
604: U106-5 U91-16 U89-11 U97-3 U79-5
604:                                      .R<0>'

605: U82-11 U63-11 U235-6 U56-4 U228-10
605: U118-14 U89-15 U88-12                .R<10>'

606: U82-13 U63-13 U235-9 U56-3 U228-12
606: U118-13 U89-5 U88-15                 .R<11>'

607: U111-15 U64-15 U235-19 U56-18 U226-4
607: U118-8 U89-14 U88-16                 .R<12>'

608: U111-9 U64-9 U235-15 U56-14 U226-6
608: U118-7 U89-6 U88-19                  .R<13>'

609: U111-11 U64-11 U235-12 U56-17 U226-10
609: U118-4 U89-13                        .R<14>'

610: U111-13 U145-19 U64-13 U235-16 U56-13
610: U186-4 U226-12 U106-6 U118-3 U89-7
610: U151-2                               .R<15>'

611: U113-15 U83-15 U143-9 U125-4         .R<16>'

612: U113-9 U83-9 U143-6 U125-6           .R<17>'

613: U113-11 U83-11 U143-5 U125-10        .R<18>'

614: U113-13 U83-13 U143-2 U125-12        .R<19>'

615: U80-9 U145-4 U62-9 U71-7 U191-5 U168-17
615: U167-17 U164-17 U121-6 U135-17 U178-17
615: U91-4 U97-4 U79-16                   .R<1>'

616: U80-11 U145-5 U62-11 U71-4 U191-6
616: U168-14 U167-14 U164-14 U121-10 U135-14
```

```
616: U178-14 U91-15 U97-7 U79-2          .R<2>'

617: U80-13 U145-6 U62-13 U71-3 U191-9
617: U168-13 U167-13 U164-13 U121-12 U135-13
617: U178-13 U91-5 U97-8 U79-19          .R<3>'

618: U81-15 U61-15 U71-18 U191-19 U168-8
618: U167-8 U164-8 U163-4 U135-8 U178-8
618: U91-14 U97-13 U79-9                 .R<4>'

619: U81-9 U61-9 U71-14 U191-15 U168-7
619: U167-7 U164-7 U163-6 U135-7 U178-7
619: U91-6 U97-14 U79-12                 .R<5>'

620: U81-11 U61-11 U71-17 U191-12 U192-6
620: U167-4 U164-4 U163-10 U135-4 U178-4
620: U91-13 U97-17 U88-2                 .R<6>'

621: U81-13 U61-13 U71-13 U191-16 U192-4
621: U167-3 U164-3 U163-12 U135-3 U178-3
621: U91-7 U97-18 U88-5                  .R<7>'

622: U82-15 U63-15 U235-2 U56-8 U228-4
622: U118-18 U89-16 U88-6                .R<8>'

623: U82-9 U63-9 U235-5 U56-7 U228-6 U118-17
623: U89-4 U88-9                         .R<9>'

624: U173-9 J184-1                       .RAS NOW

625: U213-3 U193-11 U73A-9 U88-1 U79-1
625:                                     .RD VICTIM

626: U149-11 U212-10                     .RELD OP

627: U100-1 U107-1 U104-3 U73A-10        .REVIVE VICTIM'

628: U237-4 U171-11                      .RO DATA RDY

629: U190-15 U171-5 U179-19 U180-19 U126-1
629: U148-1 U185-6 U135-1 U117-1 U178-1
629: U118-1                              .RO/PS

630: U156-1 U177-1 U158-9 U138-9 U137-9
630: U136-1 U116-1 U147-1 U147-4 U166-15
630: U174-20 U185-14 U213-10             .RO/PS'

631: U220-5 U241-5 U222-5 U223-5 U197-5
631: U242-5 U198-5 U199-5 U164-5         .ROP FN<0>'

632: U220-6 U241-6 U222-6 U223-6 U197-6
632: U242-6 U198-6 U199-6 U164-2         .ROP FN<1>'
```

633: U220-7 U241-7 U222-7 U223-7 U197-7
633: U242-7 U198-7 U199-7 U167-5 .ROP FN<2>

634: U196-11 U195-7 .SA<0>

635: U176-11 U195-6 .SA<1>

636: U114-11 U195-5 .SA<2>

637: U195-4 U134-11 .SA<3>

638: U195-3 U175-11 .SA<4>

639: U155-11 U195-2 .SA<5>

640: U115-11 U195-1 .SA<6>

641: U196-12 U194-7 .SB<0>

642: U176-12 U194-6 .SB<1>

643: U114-12 U194-5 .SB<2>

644: U134-12 U194-4 .SB<3>

645: U194-3 U175-12 .SB<4>

646: U194-2 U155-12 .SB<5>

647: U115-12 U194-1 .SB<6>

648: U196-14 U218-7 .SC<0>

649: U176-14 U218-6 .SC<1>

650: U114-14 U218-5 .SC<2>

651: U218-4 U134-14 .SC<3>

652: U218-3 U175-14 .SC<4>

653: U155-14 U218-2 .SC<5>

654: U115-14 U218-1 .SC<6>

655: U196-15 U217-7 .SD<0>

656: U176-15 U217-6 .SD<1>

657: U114-15 U217-5 .SD<2>

658: U217-4 U134-15 .SD<3>

659: U217-3 U175-15 .SD<4>

660: U155-15 U217-2 .SD<5>

661: U115-15 U217-1 .SD<6>

662: U214-2 U215-11 U151-17 U43-19 U150-4
662: U193-4 U216-3 .SF<0>

663: U214-5 U215-10 U151-15 U43-16 U150-3
663: U193-3 U216-4 .SF<1>

664: U214-11 U215-9 U151-13 U43-15 U150-2
664: U193-2 U216-5 .SF<2>

665: U215-13 U151-11 U43-12 U150-1 U193-1
665: U216-2 .SF<3>

666: U147-2 U188-2 .SH TYPE

667: U217-10 U218-10 U194-10 U195-10 U166-9
667: U148-9 .SHIFT CNTL<0>

668: U217-9 U218-9 U194-9 U195-9 U166-8
668: U148-6 .SHIFT CNTL<1>

669: U134-10 U155-10 U176-10 U196-10 U114-10
669: U175-10 U115-10 U166-7 U148-5 .SHIFT CNTL<2>

670: U134-9 U155-9 U176-9 U196-9 U114-9
670: U175-9 U115-9 U166-6 U148-2 .SHIFT CNTL<3>

671: U140-17 U143-18 U197-12 U141-3 .SHIFT<0>

672: U225-4 U223-12 U183-7 .SHIFT<10>

673: U225-2 U223-11 U183-8 .SHIFT<11>

674: U202-17 U198-12 U183-13 .SHIFT<12>

675: U202-15 U198-11 U183-14 .SHIFT<13>

676: U202-13 U222-12 .SHIFT<14>

677: U202-11 U222-11 .SHIFT<15>

678: U140-15 U143-17 U197-11 U141-4 .SHIFT<1>

679: U140-13 U143-14 U220-12 U141-7 .SHIFT<2>

680: U140-11 U143-13 U220-11 U141-8 .SHIFT<3>

681: U140-8 U242-12 U141-13 .SHIFT<4>

682: U140-6 U242-11 U141-14 .SHIFT<5>

683: U140-4 U241-12 U141-17 .SHIFT<6>

684: U140-2 U241-11 U141-18 .SHIFT<7>

685: U225-8 U199-12 U183-3 .SHIFT<8>

686: U225-6 U199-11 U183-4 .SHIFT<9>

687: U103-19 U102-19 U86-8 .SHORT CONST'

688: U195-11 U197-16 .SHOUT<0>

689: U218-14 U223-16 .SHOUT<10>

690: U217-14 U223-15 .SHOUT<11>

691: U195-15 U198-16 .SHOUT<12>

692: U194-15 U198-15 .SHOUT<13>

693: U218-15 U222-16 .SHOUT<14>

694: U217-15 U222-15 .SHOUT<15>

695: U194-11 U197-15 .SHOUT<1>

696: U218-11 U220-16 .SHOUT<2>

697: U217-11 U220-15 .SHOUT<3>

698: U195-12 U242-16 .SHOUT<4>

699: U194-12 U242-15 .SHOUT<5>

700: U218-12 U241-16 .SHOUT<6>

701: U217-12 U241-15 .SHOUT<7>

702: U195-14 U199-16 .SHOUT<8>

703: U194-14 U199-15 .SHOUT<9>

704: U224-16 U160-3 U157-4 U219-17 .SI<0>

705: U244-2 U159-15 U137-6 U221-18 .SI<10>

706: U244-5 U159-2 U137-7 U221-4 .SI<11>

707: U244-6 U200-3 U138-4 U221-13 .SI<12>

708: U200-1 U244-9 U138-5 U221-14 .SI<13>

709: U200-15 U244-15 U138-6 U221-7 .SI<14>

710: U244-12 U200-2 U138-7 U221-8 .SI<15>

711: U224-19 U160-1 U157-5 U219-3 .SI<1>

712: U160-15 U224-2 U157-6 U219-18 .SI<2>

713: U160-2 U224-5 U157-7 U219-4 .SI<3>

714: U181-3 U224-6 U158-4 U219-13 .SI<4>

715: U224-9 U181-1 U158-5 U219-14 .SI<5>

716: U224-15 U181-15 U158-6 U219-7 .SI<6>

717: U181-2 U224-12 U158-7 U219-8 .SI<7>

718: U244-16 U159-3 U137-4 U221-17 .SI<8>

719: U244-19 U159-1 U137-5 U221-3 .SI<9>

720: U211-13 U190-16 U208-13 U172-7 U169-1
720: .SL/SR

721: U211-4 U208-12 .SL/SR'

722: U177-5 U196-7 U201-3 U178-19 .SL<0>

723: U136-15 U114-5 U176-1 U117-15 .SL<10>

724: U136-2 U114-4 U117-12 .SL<11>

725: U136-12 U134-7 U114-3 U117-9 .SL<12>

726: U136-9 U134-6 U114-2 U117-6 .SL<13>

727: U136-16 U134-5 U114-1 U117-5 .SL<14>

728: U136-5 U134-4 U117-2 .SL<15>

729: U156-6 U175-7 U134-3 U135-19 .SL<16>

730: U156-19 U175-6 U134-2 U135-16 .SL<17>

731: U156-15 U175-5 U134-1 U135-15 .SL<18>

732: U156-2 U175-4 U135-12 .SL<19>

733: U177-12 U196-6 U201-4 U178-16 .SL<1>

734: U156-12 U155-7 U175-3 U135-9 .SL<20>

735: U156-9 U155-6 U175-2 U135-6 .SL<21>

736: U156-16 U155-5 U175-1 U135-5 .SL<22>

737: U156-5 U155-4 U135-2 .SL<23>

738: U116-5 U115-7 U155-3 U118-19 .SL<24>

739: U116-12 U115-6 U155-2 U118-16 .SL<25>

740: U116-16 U115-5 U155-1 U118-15 .SL<26>

741: U116-9 U115-4 U118-12 .SL<27>

742: U116-19 U115-3 U118-9 .SL<28>

743: U116-2 U115-2 U118-6 .SL<29>

744: U177-16 U196-5 U201-5 U178-15 .SL<2>

745: U116-15 U115-1 U118-5 .SL<30>

746: U177-9 U196-4 U201-6 U178-12 .SL<3>

747: U177-19 U176-7 U196-3 U178-9 .SL<4>

748: U177-2 U176-6 U196-2 U178-6 .SL<5>

749: U177-15 U176-5 U196-1 U178-5 .SL<6>

750: U177-6 U176-4 U178-2 .SL<7>

751: U136-6 U114-7 U176-3 U117-19 .SL<8>

752: U136-19 U114-6 U176-2 U117-16 .SL<9>

753: U68-4 U67-11 U87-1 .SP<0>

754: U68-3 U67-12 U87-15 .SP<1>

755: U68-2 U67-13 U87-14 .SP<2>

756: U167-19 U166-18 .SRC BIT<0>

757: U167-16 U166-17 .SRC BIT<1>

```
758: U167-15 U166-16                    .SRC BIT<2>

759: U167-12 U166-5                     .SRC BIT<3>

760: U210-3 U147-12                     .SRC FIFO CLR`

761: U172-15 U170-2                     .SRC QUAD

762: U167-9 U172-2                      .SRC WRD<0>`

763: U167-6 U172-1                      .SRC WRD<1>`

764: U193-9 U237-9                      .STK CLK ENB H

765: U254-6 U233-15                     .STK EMP`

766: U193-6 U236-2 U233-9               .STK RESET`

767: U193-7 U130-1                      .STK WE

768: U227-8 J173-1 U208-9               .TIME<0>`

769: U227-7 J174-1 U231-9 U231-10       .TIME<1>`

770: U92-11 U9-9 U1-9 U4-9 U32-9 U28-9
770: U29-9 U6-9 U35-9 U49-9 U48-9 U15-9
770: U11-9 U42-9 U50-9 U19-9 U39-9      .U WR A`

771: U92-10 U36-9 U26-9 U5-9 U34-9 U52-9
771: U27-9 U33-9 U59-9 U46-9 U20-9 U24-9
771: U21-9 U16-9 U18-9 U22-9 U44-9      .U WR B`

772: U92-9 U31-9 U3-9 U54-9 U53-9 U57-9
772: U30-9 U2-9 U58-9 U38-9 U45-9 U25-9
772: U12-9 U37-9 U13-9 U47-9 U40-9      .U WR C`

773: JA1-1 U69-13 U10-14 U59-8          .U<0>

774: U41-14 JA21-1 U23-12 U29-8         .U<10>

775: U41-13 JA23-1 U23-11 U28-8         .U<11>

776: U43-8 JA25-1 U23-6 U32-8           .U<12>

777: U43-7 JA27-1 U23-7 U4-8            .U<13>

778: U43-4 JA29-1 U23-9 U1-8            .U<14>

779: U43-3 JA31-1 U23-8 U9-8            .U<15>

780: U43-18 JA33-1 U17-8 U44-8          .U<16>
```

781: U43-17 JA35-1 U17-7 U22-8 .U<17>

782: U43-14 JA37-1 U17-11 U18-8 .U<18>

783: U43-13 JA39-1 U17-9 U16-8 .U<19>

784: JA3-1 U69-12 U10-13 U33-8 .U<1>

785: JA41-1 U110-13 U17-6 U21-8 .U<20>

786: JA43-1 U110-12 U17-12 U24-8 .U<21>

787: U85-17 JA45-1 U14-12 U15-8 .U<22>

788: U85-18 JA47-1 U14-11 U42-8 .U<23>

789: U85-4 JA49-1 U14-7 U49-8 .U<24>

790: U85-3 JB2-1 U14-6 U48-8 .U<25>

791: JB4-1 U110-5 U17-13 U20-8 .U<26>

792: U85-7 JB6-1 U14-8 U11-8 .U<27>

793: JB8-1 U110-4 U17-14 U46-8 .U<28>

794: U85-8 JB10-1 U14-9 U50-8 .U<29>

795: JA5-1 U69-5 U10-12 U27-8 .U<2>

796: U85-13 JB12-1 U14-14 U19-8 .U<30>

797: U85-14 JB14-1 U14-13 U39-8 .U<31>

798: U60-17 JB16-1 U8-11 U40-8 .U<32>

799: U60-13 JB18-1 U8-13 U47-8 .U<33>

800: U60-18 JB20-1 U8-12 U13-8 .U<34>

801: U60-14 JB22-1 U8-14 U37-8 .U<35>

802: U60-7 JB24-1 U8-8 U12-8 .U<36>

803: U60-3 JB26-1 U8-6 U25-8 .U<37>

804: U60-8 JB28-1 U8-9 U45-8 .U<38>

805: U60-4 JB30-1 U8-7 U38-8 .U<39>

806: JA7-1 U69-4 U10-11 U52-8 .U<3>

```
807: U55-14 JB32-1 U7-14 U31-8          .U<40>

808: U55-18 JB34-1 U7-12 U3-8           .U<41>

809: U55-13 JB36-1 U7-13 U54-8          .U<42>

810: U55-17 JB38-1 U7-11 U53-8          .U<43>

811: U55-4 JB40-1 U7-7 U57-8            .U<44>

812: U55-8 JB42-1 U7-9 U30-8            .U<45>

813: U55-3 JB44-1 U7-6 U2-8             .U<46>

814: U55-7 JB46-1 U7-8 U58-8            .U<47>

815: U41-8 JA9-1 U10-9 U34-8            .U<4>

816: U41-7 JA11-1 U10-8 U5-8            .U<5>

817: U41-4 JA13-1 U10-6 U26-8           .U<6>

818: U41-3 JA15-1 U10-7 U36-8           .U<7>

819: U41-18 JA17-1 U23-14 U35-8         .U<8>

820: U41-17 JA19-1 U23-13 U6-8          .U<9>

821: RS2-10 U14-2 U17-2 U23-2 U46-1 U20-1
821: U24-1 U21-1 U16-1 U18-1 U22-1 U44-1
821: U38-1 U45-1 U25-1 U12-1 U37-1 U13-1
821: U47-1 U40-1 U49-1 U48-1 U15-1 U11-1
821: U42-1 U50-1 U19-1 U39-1            .UA<0>A`

822: RS6-1 U10-2 U8-2 U7-2 U31-1 U3-1
822: U54-1 U53-1 U57-1 U30-1 U2-1 U58-1
822: U9-1 U1-1 U4-1 U32-1 U28-1 U29-1
822: U6-1 U35-1 U36-1 U26-1 U5-1 U34-1
822: U52-1 U27-1 U33-1 U59-1            .UA<0>B`

823: RS2-3 U46-16 U20-16 U24-16 U21-16
823: U16-16 U18-16 U22-16 U44-16 U38-16
823: U45-16 U25-16 U12-16 U37-16 U13-16
823: U47-16 U40-16 U49-16 U48-16 U15-16
823: U11-16 U42-16 U50-16 U19-16 U39-16
823:                                    .UA<10>A`

824: RS5-1 U31-16 U3-16 U54-16 U53-16
824: U57-16 U30-16 U2-16 U58-16 U9-16
824: U1-16 U4-16 U32-16 U28-16 U29-16
824: U6-16 U35-16 U36-16 U26-16 U5-16
```

```
824: U34-16 U52-16 U27-16 U33-16 U59-16
824:                                    .UA<10>B'

825: U131-10 RS1-10 U46-17 U20-17 U24-17
825: U21-17 U16-17 U18-17 U22-17 U44-17
825: U38-17 U45-17 U25-17 U12-17 U37-17
825: U13-17 U47-17 U40-17 U49-17 U48-17
825: U15-17 U11-17 U42-17 U50-17 U19-17
825: U39-17                             .UA<11>A'

826: RS5-4 U31-17 U3-17 U54-17 U53-17
826: U57-17 U30-17 U2-17 U58-17 U9-17
826: U1-17 U4-17 U32-17 U28-17 U29-17
826: U6-17 U35-17 U36-17 U26-17 U5-17
826: U34-17 U52-17 U27-17 U33-17 U59-17
826:                                    .UA<11>B'

827: U46-18 U20-18 U24-18 U21-18 U16-18
827: U18-18 U22-18 U44-18 U38-18 U45-18
827: U25-18 U12-18 U37-18 U13-18 U47-18
827: U40-18 U49-18 U48-18 U15-18 U11-18
827: U42-18 U50-18 U19-18 U39-18 RS3-2
827:                                    .UA<12>A'

828: U31-18 U3-18 U54-18 U53-18 U57-18
828: U30-18 U2-18 U58-18 U9-18 U1-18 U4-18
828: U32-18 U28-18 U29-18 U6-18 U35-18
828: U36-18 U26-18 U5-18 U34-18 U52-18
828: U27-18 U33-18 U59-18 RS3-3         .UA<12>B'

829: U46-19 U20-19 U24-19 U21-19 U16-19
829: U18-19 U22-19 U44-19 U38-19 U45-19
829: U25-19 U12-19 U37-19 U13-19 U47-19
829: U40-19 U49-19 U48-19 U15-19 U11-19
829: U42-19 U50-19 U19-19 U39-19 RS3-10
829:                                    .UA<13>A'

830: U31-19 U3-19 U54-19 U53-19 U57-19
830: U30-19 U2-19 U58-19 U9-19 U1-19 U4-19
830: U32-19 U28-19 U29-19 U6-19 U35-19
830: U36-19 U26-19 U5-19 U34-19 U52-19
830: U27-19 U33-19 U59-19 RS3-7         .UA<13>B'

831: RS2-8 U14-18 U17-18 U23-18 U46-2
831: U20-2 U24-2 U21-2 U16-2 U18-2 U22-2
831: U44-2 U38-2 U45-2 U25-2 U12-2 U37-2
831: U13-2 U47-2 U40-2 U49-2 U48-2 U15-2
831: U11-2 U42-2 U50-2 U19-2 U39-2      .UA<1>A'

832: RS5-6 U10-18 U8-18 U7-18 U31-2 U3-2
832: U54-2 U53-2 U57-2 U30-2 U2-2 U58-2
832: U9-2 U1-2 U4-2 U32-2 U28-2 U29-2
```

```
832: U6-2 U35-2 U36-2 U26-2 U5-2 U34-2
832: U52-2 U27-2 U33-2 U59-2                .UA<1>B`

833: RS2-6 U14-5 U17-5 U23-5 U46-3 U20-3
833: U24-3 U21-3 U16-3 U18-3 U22-3 U44-3
833: U38-3 U45-3 U25-3 U12-3 U37-3 U13-3
833: U47-3 U40-3 U49-3 U48-3 U15-3 U11-3
833: U42-3 U50-3 U19-3 U39-3                .UA<2>A`

834: RS6-5 U10-5 U8-5 U7-5 U31-3 U3-3
834: U54-3 U53-3 U57-3 U30-3 U2-3 U58-3
834: U9-3 U1-3 U4-3 U32-3 U28-3 U29-3
834: U6-3 U35-3 U36-3 U26-3 U5-3 U34-3
834: U52-3 U27-3 U33-3 U59-3                .UA<2>B`

835: RS2-1 U14-3 U17-3 U23-3 U46-4 U20-4
835: U24-4 U21-4 U16-4 U18-4 U22-4 U44-4
835: U38-4 U45-4 U25-4 U12-4 U37-4 U13-4
835: U47-4 U40-4 U49-4 U48-4 U15-4 U11-4
835: U42-4 U50-4 U19-4 U39-4                .UA<3>A`

836: RS6-7 U10-3 U8-3 U7-3 U31-4 U3-4
836: U54-4 U53-4 U57-4 U30-4 U2-4 U58-4
836: U9-4 U1-4 U4-4 U32-4 U28-4 U29-4
836: U6-4 U35-4 U36-4 U26-4 U5-4 U34-4
836: U52-4 U27-4 U33-4 U59-4                .UA<3>B`

837: RS5-10 U14-17 U17-17 U23-17 U46-5
837: U20-5 U24-5 U21-5 U16-5 U18-5 U22-5
837: U44-5 U38-5 U45-5 U25-5 U12-5 U37-5
837: U13-5 U47-5 U40-5 U49-5 U48-5 U15-5
837: U11-5 U42-5 U50-5 U19-5 U39-5          .UA<4>A`

838: RS4-4 U10-17 U8-17 U7-17 U31-5 U3-5
838: U54-5 U53-5 U57-5 U30-5 U2-5 U58-5
838: U9-5 U1-5 U4-5 U32-5 U28-5 U29-5
838: U6-5 U35-5 U36-5 U26-5 U5-5 U34-5
838: U52-5 U27-5 U33-5 U59-5                .UA<4>B`

839: RS5-8 U14-1 U17-1 U23-1 U46-6 U20-6
839: U24-6 U21-6 U16-6 U18-6 U22-6 U44-6
839: U38-6 U45-6 U25-6 U12-6 U37-6 U13-6
839: U47-6 U40-6 U49-6 U48-6 U15-6 U11-6
839: U42-6 U50-6 U19-6 U39-6                .UA<5>A`

840: RS4-6 U10-1 U8-1 U7-1 U31-6 U3-6
840: U54-6 U53-6 U57-6 U30-6 U2-6 U58-6
840: U9-6 U1-6 U4-6 U32-6 U28-6 U29-6
840: U6-6 U35-6 U36-6 U26-6 U5-6 U34-6
840: U52-6 U27-6 U33-6 U59-6                .UA<5>B`

841: RS1-5 U14-16 U17-16 U23-16 U46-7
```

```
841: U20-7 U24-7 U21-7 U16-7 U18-7 U22-7
841: U44-7 U38-7 U45-7 U25-7 U12-7 U37-7
841: U13-7 U47-7 U40-7 U49-7 U48-7 U15-7
841: U11-7 U42-7 U50-7 U19-7 U39-7        .UA<6>A`

842: RS4-1 U10-16 U8-16 U7-16 U31-7 U3-7
842: U54-7 U53-7 U57-7 U30-7 U2-7 U58-7
842: U9-7 U1-7 U4-7 U32-7 U28-7 U29-7
842: U6-7 U35-7 U36-7 U26-7 U5-7 U34-7
842: U52-7 U27-7 U33-7 U59-7              .UA<6>B`

843: RS1-7 U14-19 U17-19 U23-19 U46-13
843: U20-13 U24-13 U21-13 U16-13 U18-13
843: U22-13 U44-13 U38-13 U45-13 U25-13
843: U12-13 U37-13 U13-13 U47-13 U40-13
843: U49-13 U48-13 U15-13 U11-13 U42-13
843: U50-13 U19-13 U39-13                 .UA<7>A`

844: RS4-10 U10-19 U8-19 U7-19 U31-13
844: U3-13 U54-13 U53-13 U57-13 U30-13
844: U2-13 U58-13 U9-13 U1-13 U4-13 U32-13
844: U28-13 U29-13 U6-13 U35-13 U36-13
844: U26-13 U5-13 U34-13 U52-13 U27-13
844: U33-13 U59-13                        .UA<7>B`

845: RS1-4 U14-4 U17-4 U23-4 U46-14 U20-14
845: U24-14 U21-14 U16-14 U18-14 U22-14
845: U44-14 U38-14 U45-14 U25-14 U12-14
845: U37-14 U13-14 U47-14 U40-14 U49-14
845: U48-14 U15-14 U11-14 U42-14 U50-14
845: U19-14 U39-14                        .UA<8>A`

846: RS6-10 U10-4 U8-4 U7-4 U31-14 U3-14
846: U54-14 U53-14 U57-14 U30-14 U2-14
846: U58-14 U9-14 U1-14 U4-14 U32-14 U28-14
846: U29-14 U6-14 U35-14 U36-14 U26-14
846: U5-14 U34-14 U52-14 U27-14 U33-14
846: U59-14                               .UA<8>B`

847: RS1-1 U46-15 U20-15 U24-15 U21-15
847: U16-15 U18-15 U22-15 U44-15 U38-15
847: U45-15 U25-15 U12-15 U37-15 U13-15
847: U47-15 U40-15 U49-15 U48-15 U15-15
847: U11-15 U42-15 U50-15 U19-15 U39-15
847:                                      .UA<9>A`

848: RS6-3 U31-15 U3-15 U54-15 U53-15
848: U57-15 U30-15 U2-15 U58-15 U9-15
848: U1-15 U4-15 U32-15 U28-15 U29-15
848: U6-15 U35-15 U36-15 U26-15 U5-15
848: U34-15 U52-15 U27-15 U33-15 U59-15
848:                                      .UA<9>B`
```

```
849: U158-16 U138-16 U137-16 U157-16 U203-8
849:                                        .UNLD

850: J53-1 U250-3                           .UPROC INTR L

851: U100-4 U112-33 U65-8 U78-17 JC1-1
851: U79-4                                  .UUA<0>

852: U107-13 U109-8 U112-26 U78-4 U65-13
852: JC21-1 U88-13                          .UUA<10>

853: U107-14 U109-14 U112-28 U78-2 U65-11
853: JC23-1 U88-14                          .UUA<11>

854: U107-17 U51-15 U70-9 U51-17 U72-4
854: U88-17                                 .UUA<12>

855: U107-18 U51-13 U72-3 U51-11 U70-7
855: U88-18                                 .UUA<13>

856: U100-17 U112-35 U65-6 U78-15 JC3-1
856: U79-17                                 .UUA<1>

857: U100-3 U112-37 U65-4 U78-13 JC5-1
857: U79-3                                  .UUA<2>

858: U100-18 U112-39 U65-2 U78-11 JC7-1
858: U79-18                                 .UUA<3>

859: U100-8 U112-1 U73-17 U73-8 JC9-1
859: U79-8                                  .UUA<4>

860: U100-13 U112-3 U73-15 U73-6 JC11-1
860: U79-13                                 .UUA<5>

861: U107-3 JC13-1 U112-18 U73-13 U73-4
861: U88-3                                  .UUA<6>

862: U107-4 U73-2 U73-11 U112-20 JC15-1
862: U88-4                                  .UUA<7>

863: U107-7 U109-7 U112-22 U65-17 U78-8
863: JC17-1 U88-7                           .UUA<8>

864: U107-8 U109-13 U112-24 U78-6 U65-15
864: JC19-1 U88-8                           .UUA<9>

865: U71-9 U192-17 U44-12 U40-12 U49-12
865:                                        .UW<0>

866: U56-5 U54-12 U29-12 U27-12             .UW<10>
```

867: U56-2 U53-12 U28-12 U52-12 .UW<11>

868: U56-19 U57-12 U32-12 U34-12 .UW<12>

869: U56-15 U30-12 U4-12 U5-12 .UW<13>

870: U56-16 U2-12 U1-12 U26-12 .UW<14>

871: U56-12 U105-16 U58-12 U9-12 U36-12
871: .UW<15>

872: U71-6 U22-12 U47-12 U48-12 .UW<1>

873: U71-5 U18-12 U13-12 U15-12 .UW<2>

874: U71-2 U16-12 U37-12 U11-12 .UW<3>

875: U71-19 U21-12 U12-12 U42-12 .UW<4>

876: U71-15 U24-12 U25-12 U50-12 .UW<5>

877: U71-16 U20-12 U45-12 U19-12 .UW<6>

878: U71-12 U192-15 U46-12 U38-12 U39-12
878: .UW<7>

879: U56-9 U31-12 U35-12 U59-12 .UW<8>

880: U56-6 U3-12 U6-12 U33-12 .UW<9>

881: U84-8 U251-9 .VEC<0>

882: U84-6 U251-7 .VEC<1>

883: U84-4 U251-6 .VEC<2>

884: U85-6 U130-12 .W

885: U168-19 U174-6 .WID BITS<0>

886: U168-16 U174-5 .WID BITS<1>

887: U168-15 U174-4 .WID BITS<2>

888: U168-12 U174-3 .WID BITS<3>

889: U168-9 U169-7 .WID WRD<0>

890: U168-6 U169-6 .WID WRD<1>

891: U189-4 U92-5 U215-3 U213-13 U212-11

```
891: U209-4                                   .WR NOW*

892: U160-12 U181-12 U159-12 U200-12 U207-12
892:                                          .WR OP*

893: U80-20 U81-20 U111-20 U82-20 U113-20
893: U61-20 U62-20 U64-20 U63-20 U83-20
893: U130-8                                   .WR RAM*

894: U150-6 U92-3 U212-13                     .WRCS

895: U193-12 U92-1                            .WRCS<0>

896: U193-13 U92-2                            .WRCS<1>

897: U81-3 U80-3 U111-3 U82-3 U113-3 U76-10
897: U74-6                                    .X ADDR<0>

898: U81-7 U80-7 U111-7 U82-7 U113-7 U99-10
898: U75-8                                    .X ADDR<1>

899: U81-1 U80-1 U82-1 U111-1 U113-1 U76-13
899: U75-6                                    .X ADDR<2>

900: U81-5 U80-5 U111-5 U82-5 U113-5 U99-13
900: U96-8                                    .X ADDR<3>

901: U81-2 U80-2 U111-2 U82-2 U113-2 U76-6
901: U96-6                                    .X ADDR<4>

902: U81-6 U80-6 U111-6 U82-6 U113-6 U99-6
902: U74-8                                    .X ADDR<5>

903: U81-21 U80-21 U82-21 U111-21 U113-21
903: U76-3 U94-6                              .X ADDR<6>

904: U81-4 U80-4 U111-4 U82-4 U113-4 U99-3
904: U94-8                                    .X ADDR<7>

905: J187-1 U250-17 RS7-3                     .X INT INTR L

906: U55-15 U74-3                             .X<0>

907: U55-19 U75-13                            .X<1>

908: U55-12 U75-3                             .X<2>

909: U55-16 U96-13                            .X<3>

910: U55-5 U96-3                              .X<4>

911: U55-9 U74-13                             .X<5>
```

912: U55-2 U95-12 U94-3 .X<6>

913: U55-6 U95-11 U94-13 .X<7>

914: U76-11 U98-8 .Y ADDR<0>

915: U99-11 U120-6 .Y ADDR<1>

916: U76-14 U98-6 .Y ADDR<2>

917: U99-14 U120-8 .Y ADDR<3>

918: U76-5 U119-8 .Y ADDR<4>

919: U99-5 U119-6 .Y ADDR<5>

920: U76-2 U93-6 .Y ADDR<6>

921: U99-2 U93-8 .Y ADDR<7>

922: J87-1 U250-4 RS7-4 .Y INTR L

923: U101-17 U122-11 U60-16 U98-10 .Y<0>

924: U101-15 U122-8 U60-12 U120-4 .Y<1>

925: U101-13 U122-13 U60-19 U98-3 .Y<2>

926: U101-11 U122-6 U60-15 U120-13 .Y<3>

927: U101-8 U122-15 U60-6 U119-9 .Y<4>

928: U101-6 U122-4 U60-2 U119-5 .Y<5>

929: U101-4 U60-9 U95-3 U93-3 .Y<6>

930: U101-2 U60-5 U95-2 U93-13 .Y<7>

931: U61-4 U62-4 U64-4 U63-4 U83-4 U76-9
931: .YA<0>`

932: U61-1 U62-1 U64-1 U63-1 U83-1 U99-9
932: .YA<1>`

933: U61-6 U62-6 U64-6 U63-6 U83-6 U76-12
933: .YA<2>`

934: U61-3 U62-3 U64-3 U63-3 U83-3 U99-12
934: .YA<3>`

935: U61-5 U62-5 U64-5 U63-5 U83-5 U76-7

```
935:                                        .YA<4>'

936: U61-2 U62-2 U64-2 U63-2 U83-2 U99-7
936:                                        .YA<5>'

937: U61-7 U62-7 U64-7 U63-7 U83-7 U76-4
937:                                        .YA<6>'

938: U61-21 U62-21 U64-21 U63-21 U83-21
938: U99-4                                  .YA<7>'

939: J172-1 U250-13                         .Z80 RDY INT L

940: U123-8 U190-17 U127-18 U103-8 U144-17
940: U41-19 U225-17                         .Z<0>

941: U123-6 U190-14 U127-17 U124-11 U144-15
941: U41-16 U225-15                         .Z<1>

942: U123-4 U190-13 U127-14 U146-2 U103-6
942: U41-15 U225-13                         .Z<2>

943: U123-2 U190-8 U127-13 U146-4 U124-13
943: U41-12 U225-11                         .Z<3>

944: U124-8 U190-7 U127-8 U146-6 U103-4
944: U43-9 U206-17                          .Z<4>

945: U124-6 U190-4 U127-7 U146-8 U124-15
945: U43-6 U206-15                          .Z<5>

946: U124-4 U190-3 U127-4 U144-13 U103-2
946: U43-5 U206-13                          .Z<6>

947: U124-2 U127-3 U144-11 U124-17 U43-2
947: U207-4 U206-11                         .Z<7>

948: U67-6 U86-1                            .ZERO BANK
```

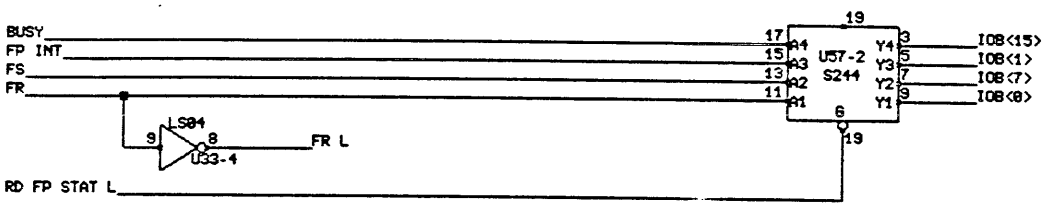

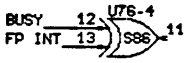

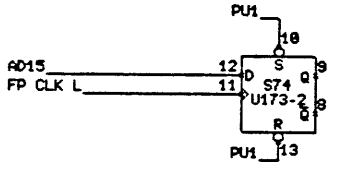

COPYRIGHT (c) 1984

THIS DOCUMENT IS NOT TO BE REPRODUCED IN ANY FORM OR TRANSMITTED IN WHOLE OR IN PART, WITHOUT PRIOR WRITTEN AUTHORIZATION OF PERQ SYSTEMS CORPORATION.

TITLE: FLOATING POINT CONTROL

e01.dp

PERQ

DESIGNED	WCH		
DRAWN	13 Sep 82 16:45:01	SBoksa	
UPDATED	APR/03/84	STECK	

SIZE	CODE	IDENTIFICATION	VAR	REV
A	11	0006-	02	AN

PROJ : ETHERNET IO BOARD W/ETHERNET Version B

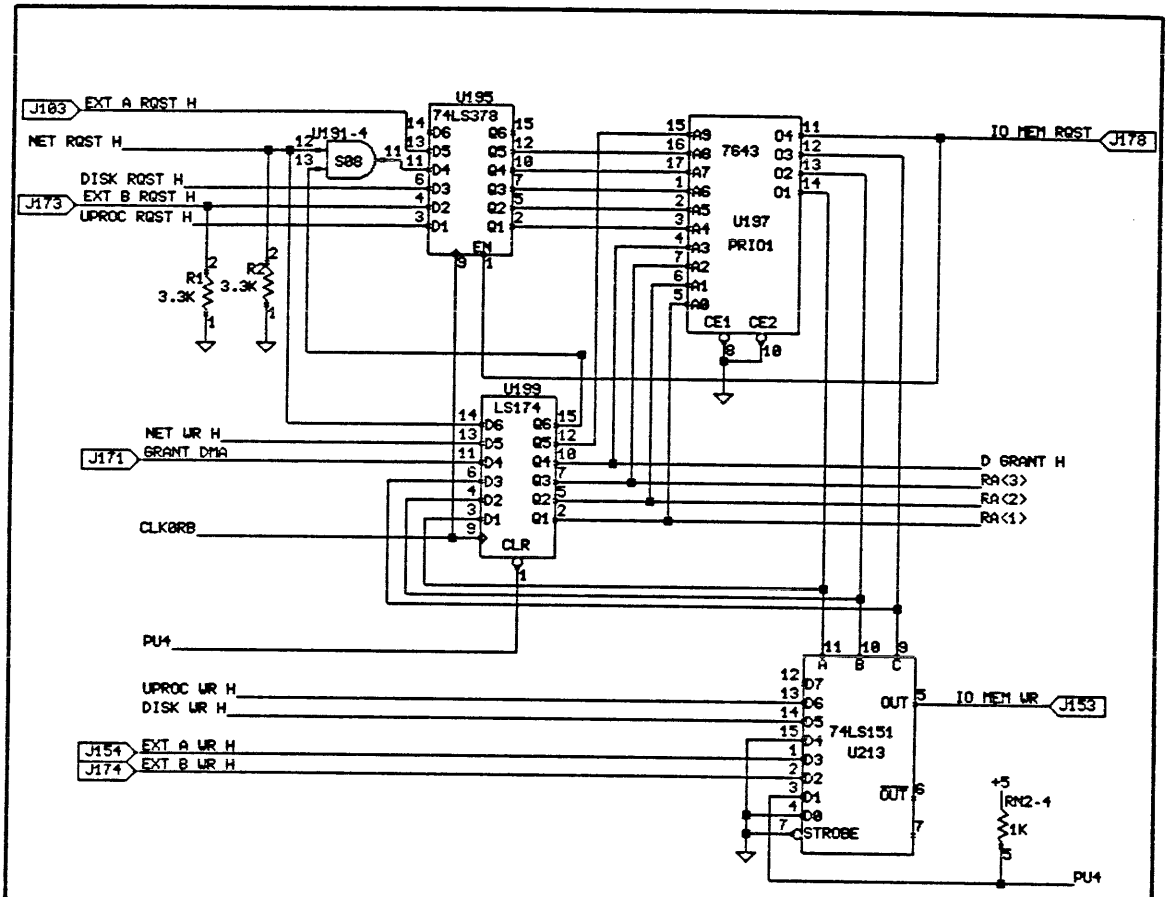

	RA/WA	RWA/ CHANNEL	HDR ADDR	DATA ADDR
<unused>	7	-	-	-
Uproc	6	1	14	15
Disk	5	2	12	13
Net Xmit	4	3	10	11
Ext A	3	4	6	7
Ext B	2	5	4	5
Net Rev	1	6	2	3
Idle	0	7	/load RAM	

COPYRIGHT (c) 1984

THIS DOCUMENT IS NOT TO BE REPRODUCED IN ANY FORM OR TRANSMITTED IN WHOLE OR IN PART, WITHOUT PRIOR WRITTEN AUTHORIZATION OF PERQ SYSTEMS CORPORATION.

TITLE: DMA PRIORITY ENCODER

e82.db

PERQ

DESIGNED	UCH	
DRAWN	13 Sep 82 16:45:01	SBokse
UPDATED	APR/03/84	STECK

SIZE	CODE	IDENTIFICATION	VAR	REV
A	11	0006-	02	AM

PROJ : ETHERNET IO BOARD U/ETHERNET Version B

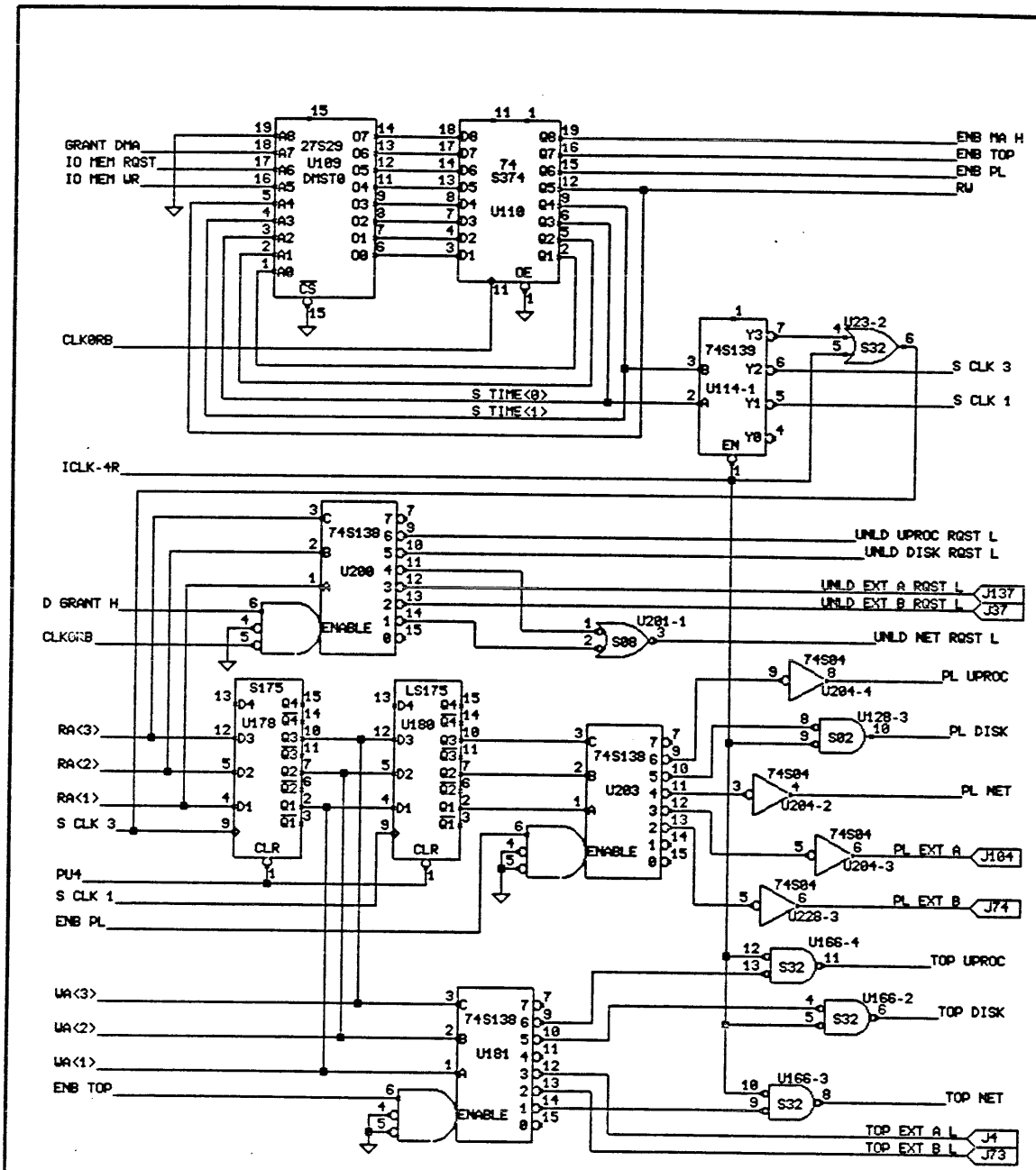

COPYRIGHT (c) 1984

THIS DOCUMENT IS NOT TO BE REPRODUCED IN ANY FORM OR TRANSMITTED IN WHOLE OR IN PART, WITHOUT PRIOR WRITTEN AUTHORIZATION OF PERQ SYSTEMS CORPORATION.

TITLE: DMA STATE MACHINE

e03.db

PERQ

DESIGNED	WCH		
DRAWN	13 Sep 82 16:45:01	SBokse	
UPDATED	APR/03/84	STECK	

SIZE	CODE	IDENTIFICATION	VAR	REV
A	11	0006-	02	AM

PROJ : ETHERNET IO BOARD U/ETHERNET Version B

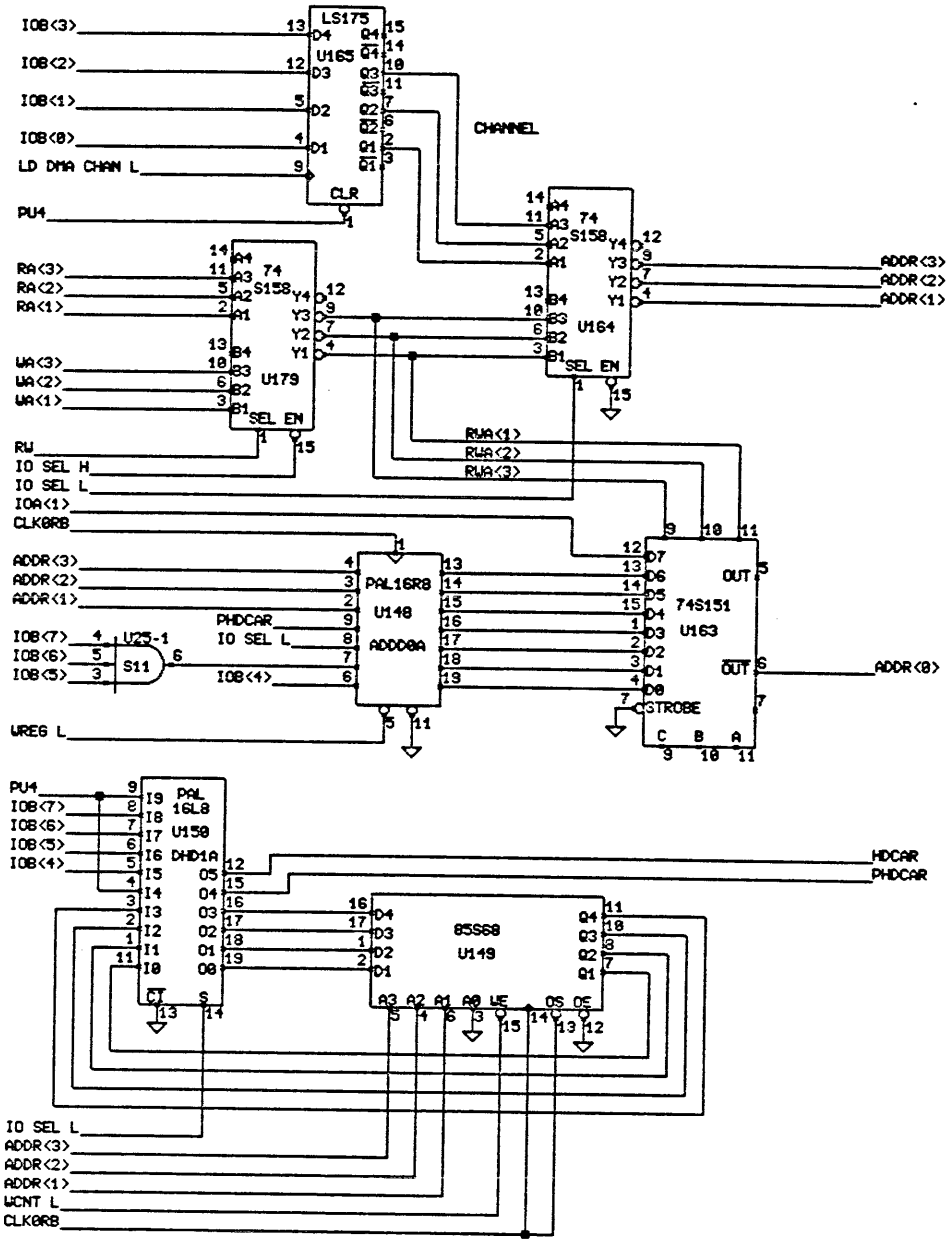

COPYRIGHT (c) 1984

THIS DOCUMENT IS NOT TO BE REPRODUCED IN ANY FORM OR TRANSMITTED IN WHOLE OR IN PART, WITHOUT PRIOR WRITTEN AUTHORIZATION OF PERQ SYSTEMS CORPORATION.

TITLE

RAM ADDRESSING

e04.db

PERQ

DESIGNED	WCH		SIZE	CODE	IDENTIFICATION	VAR	REV
DRAWN	13 Sep 82 16:45:01	SBokse	A	1 1	0 0 0 6 -	0 2	AS
UPDATED	18 Jan 85	STECK	PROJ :	ETHERNET IO BOARD W/ETHERNET Version B		PAGE 4	OF 56

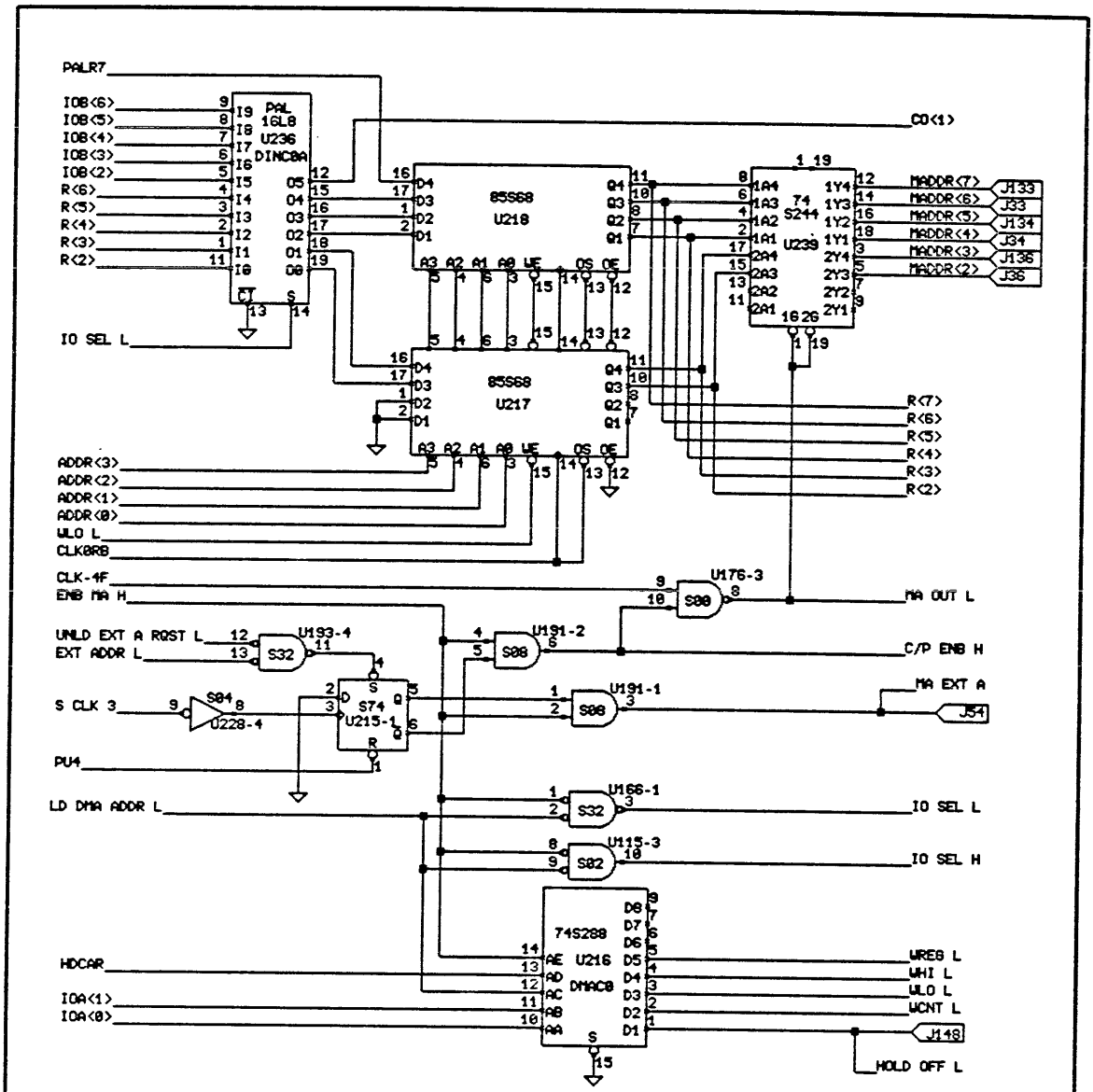

COPYRIGHT (c) 1984

THIS DOCUMENT IS NOT TO BE REPRODUCED IN ANY FORM OR TRANSMITTED IN WHOLE OR IN PART, WITHOUT PRIOR WRITTEN AUTHORIZATION OF PERQ SYSTEMS CORPORATION.

TITLE: DMA ADDRESS RAM

e85.dp

PERQ

DESIGNED	UCH		
DRAWN	13 Sep 82 16:15:01	SBokse	
UPDATED	18 Jan 85	STECK	

SIZE	CODE	IDENTIFICATION	VAR	REV
A	11	0006-	02	AS

PROJ : ETHERNET IO BOARD W/ETHERNET Version B

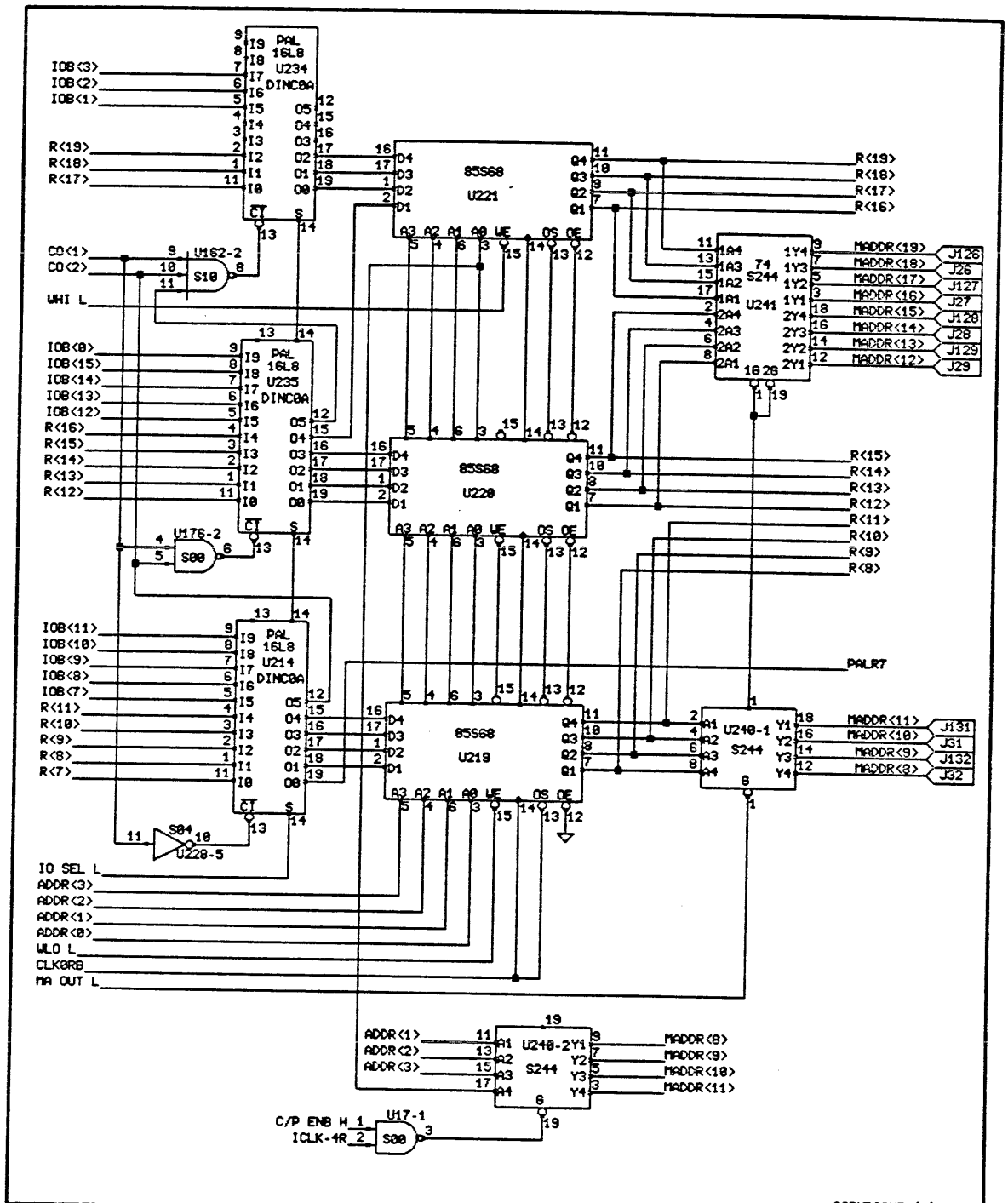

COPYRIGHT (c) 1984

THIS DOCUMENT IS NOT TO BE REPRODUCED IN ANY FORM OR TRANSMITTED IN WHOLE OR IN PART, WITHOUT PRIOR WRITTEN AUTHORIZATION OF PERQ SYSTEMS CORPORATION.

TITLE: DMA ADDRESS RAM

e06.dp

PERQ

DESIGNED	UCH		
DRAWN	13 Sep 82 16:45:01	SBolse	
UPDATED	18 Jan 85	STECK	

SIZE	CODE	IDENTIFICATION	VAR	REV
A	11	0006-	02	AS

PROJ : ETHERNET IO BOARD U/ETHERNET Version B

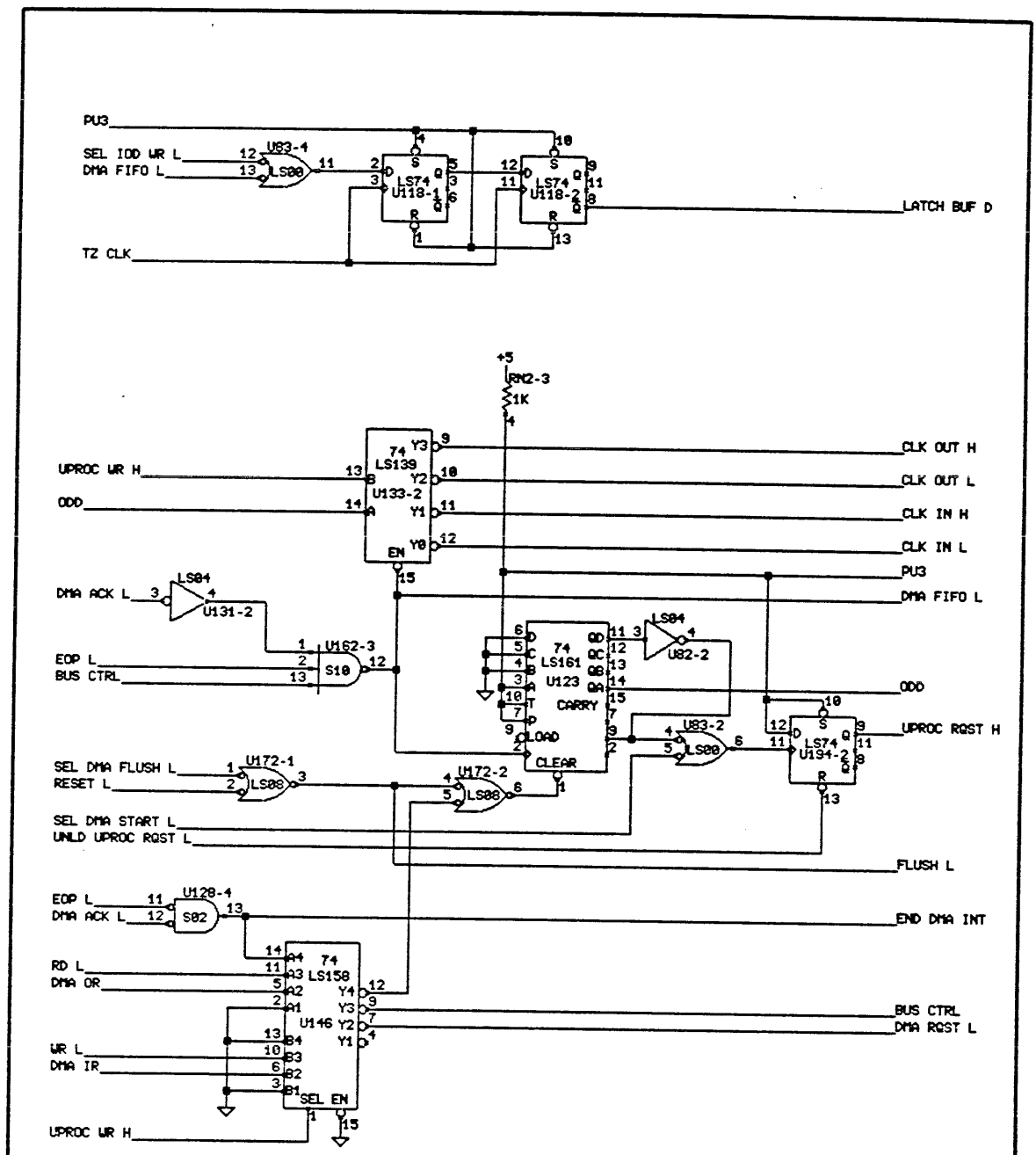

COPYRIGHT (c) 1984

THIS DOCUMENT IS NOT TO BE REPRODUCED IN ANY FORM OR TRANSMITTED IN WHOLE OR IN PART, WITHOUT PRIOR WRITTEN AUTHORIZATION OF PERQ SYSTEMS CORPORATION.

TITLE	UPROC DMA CHANNEL CONTROL					e07.db	
PERQ	DESIGNED	UCH		SIZE	CODE	IDENTIFICATION	VAR	REV
	DRAWN	13 Sep 82 16:15:01	SBokse	A	1 1	0 0 0 6 -	0 2	AN
	UPDATED	APR/03/84	STECK	PROJ :	ETHERNET IO BOARD W/ETHERNET Version B		PAGE 7	OF 56

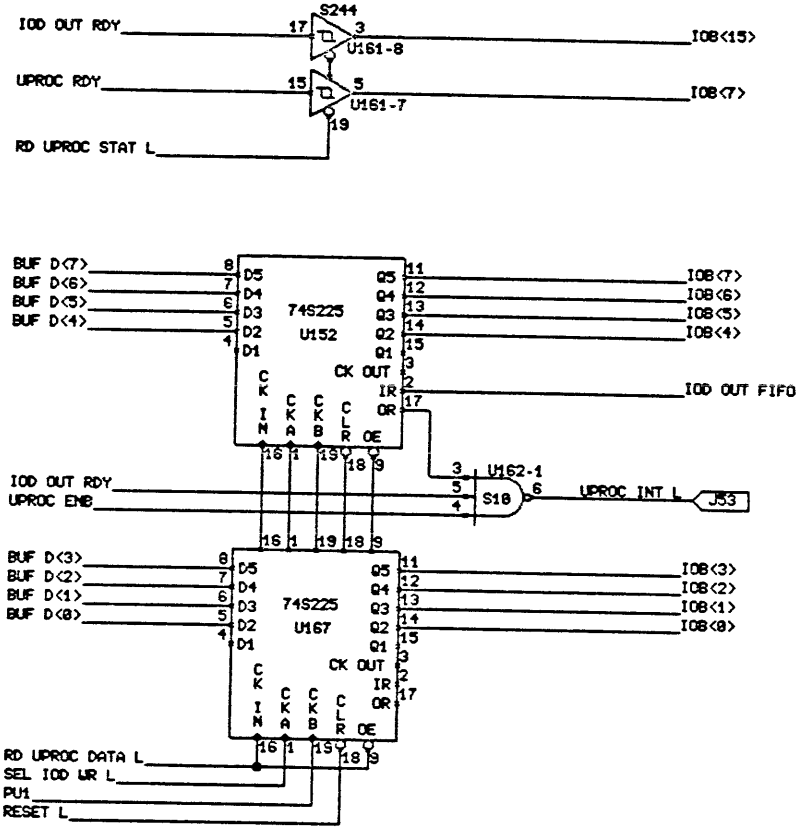

COPYRIGHT (c) 1984

THIS DOCUMENT IS NOT TO BE REPRODUCED IN ANY FORM OR TRANSMITTED IN WHOLE OR IN PART, WITHOUT PRIOR WRITTEN AUTHORIZATION OF PERQ SYSTEMS CORPORATION.

TITLE: Z80 I/O BUS INPUT

e08.db

PERQ

DESIGNED	WCH		SIZE	CODE	IDENTIFICATION	VAR	REV
DRAWN	13 Sep 82 16:45:01	SBoksa	A	11	0006-	02	AN
UPDATED	APR/03/84	STECK	PROJ : ETHERNET IO BOARD U/ETHERNET Version B			PAGE 8 OF 56	

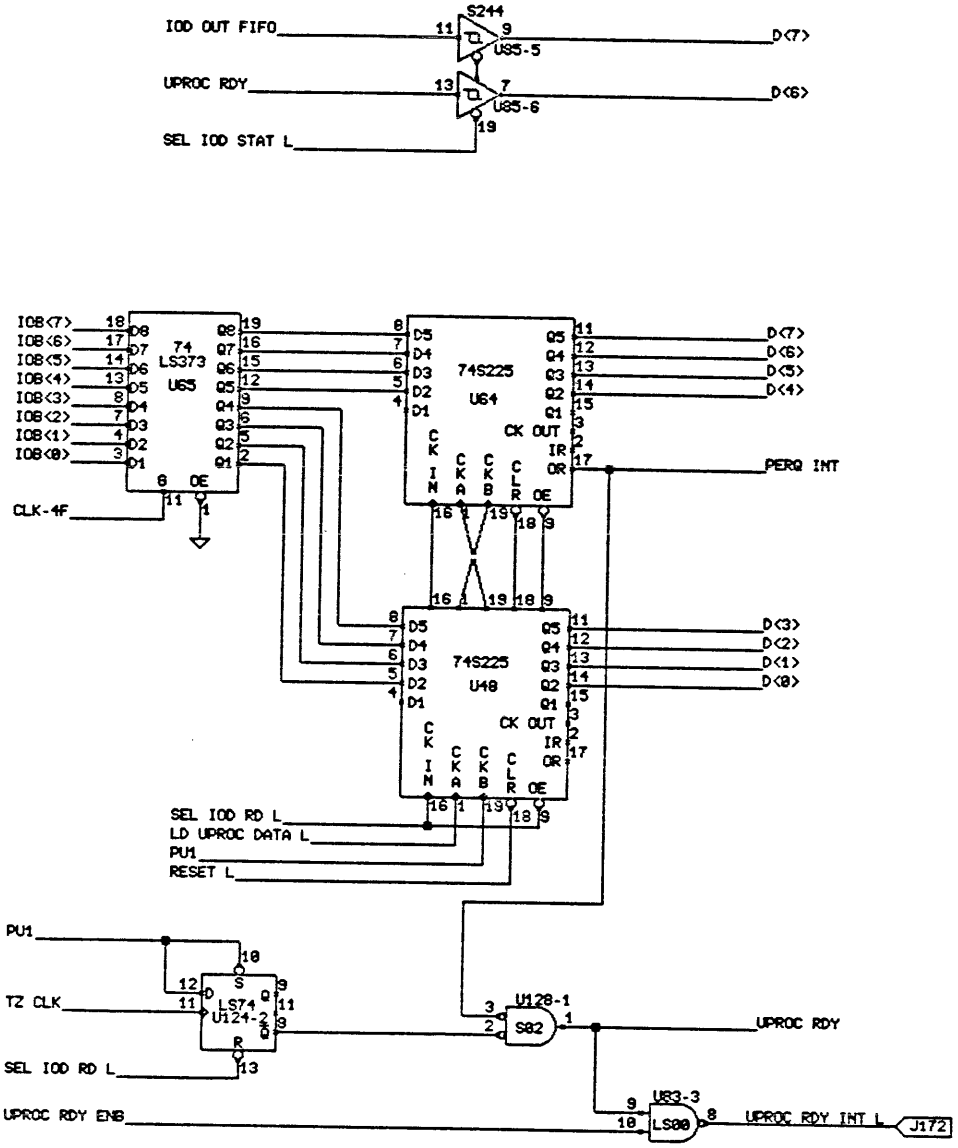

COPYRIGHT (c) 1984

THIS DOCUMENT IS NOT TO BE REPRODUCED IN ANY FORM OR TRANSMITTED IN WHOLE OR IN PART, WITHOUT PRIOR WRITTEN AUTHORIZATION OF PERQ SYSTEMS CORPORATION.

TITLE: Z80 I/O BUS INPUT

e09.dp

PERQ

DESIGNED	WCH		
DRAWN	13 Sep 82 16:45:01	SBokse	
UPDATED	APR/03/84	STECK	

SIZE	CODE	IDENTIFICATION	VAR	REV
A	11	0006-	02	AN

PROJ : ETHERNET IO BOARD W/ETHERNET Version B

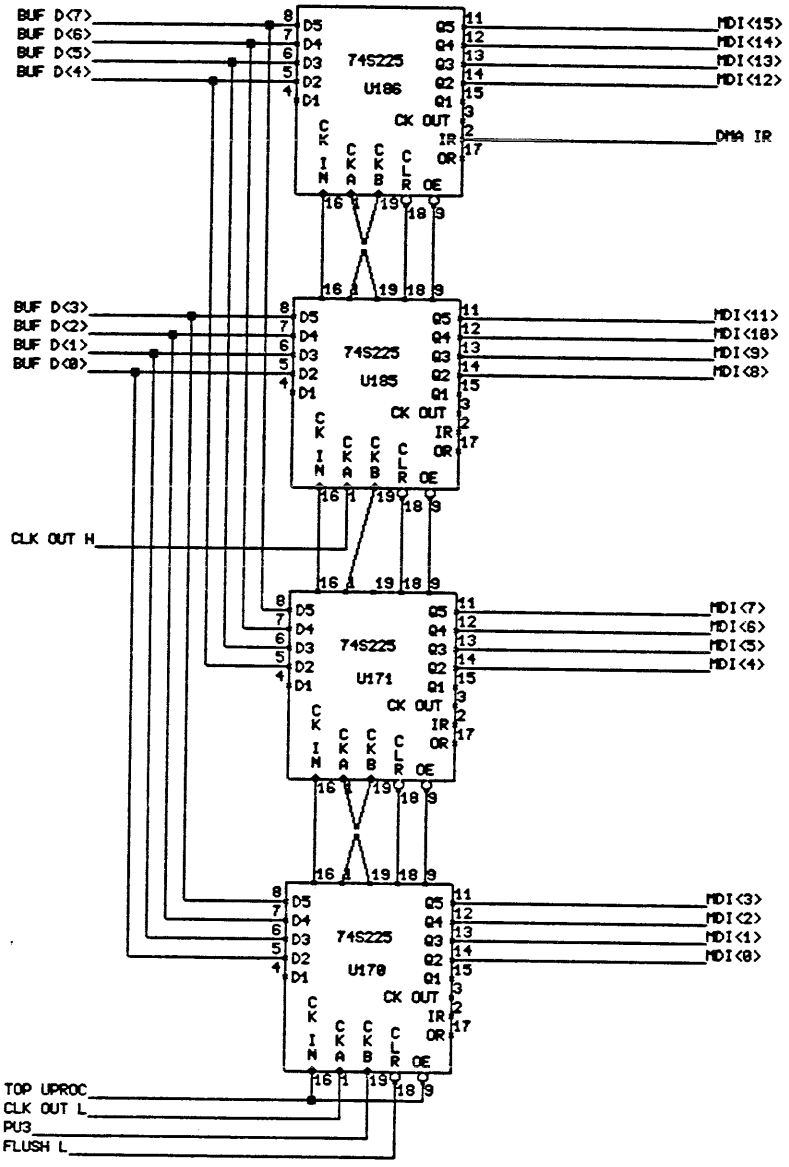

COPYRIGHT (c) 1984

THIS DOCUMENT IS NOT TO BE REPRODUCED IN ANY FORM OR TRANSMITTED IN WHOLE OR IN PART, WITHOUT PRIOR WRITTEN AUTHORIZATION OF PERQ SYSTEMS CORPORATION.

TITLE: Z80 MEMORY BUS OUTPUT

e10.db

PERQ

DESIGNED	WCH		
DRAWN	13 Sep 82 16:45:01	SBakse	
UPDATED	APR/03/84	STECK	

SIZE	CODE	IDENTIFICATION	VAR	REV
A	11	0006-	02	AM

PROJ : ETHERNET IO BOARD W/ETHERNETY Version B

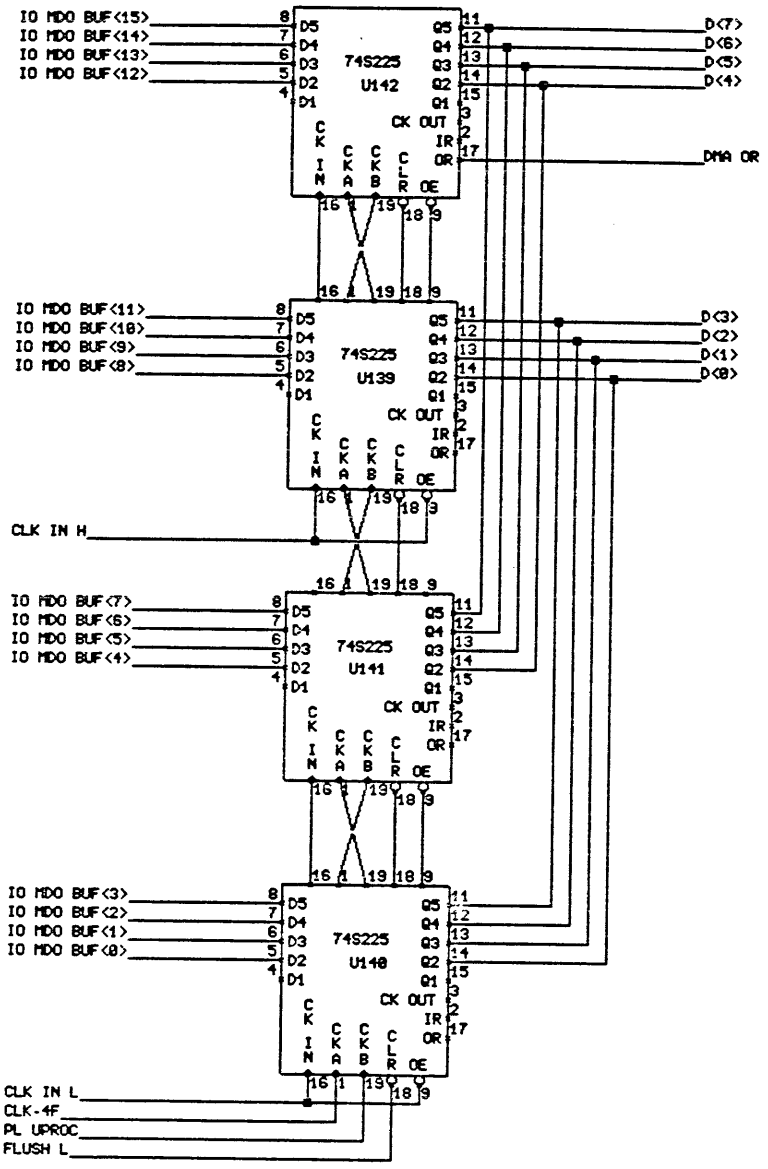

COPYRIGHT (c) 1984

THIS DOCUMENT IS NOT TO BE REPRODUCED IN ANY FORM OR TRANSMITTED IN WHOLE OR IN PART, WITHOUT PRIOR WRITTEN AUTHORIZATION OF PERQ SYSTEMS CORPORATION.

TITLE: Z80 MEMORY BUS INPUT

e11.dp

PERQ

DESIGNED	WCH		
DRAWN	13 Sep 82 16:15:01	SBokse	
UPDATED	APR/03/84	STECK	

SIZE	CODE	IDENTIFICATION	VAR	REV
A	11	0006-	02	AN

PROJ : ETHERNET IO BOARD W/ETHERNET Version B

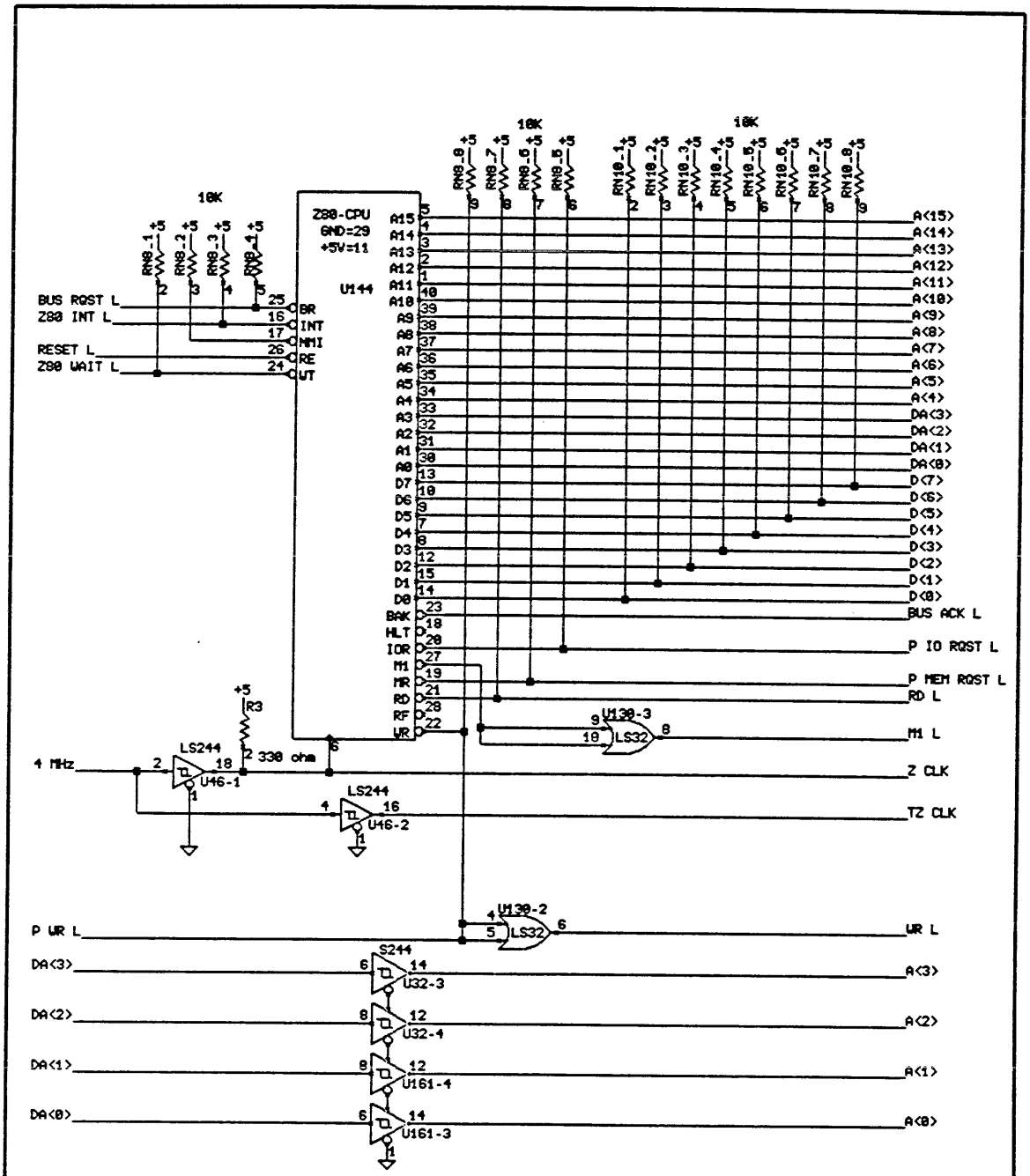

COPYRIGHT (c) 1984

THIS DOCUMENT IS NOT TO BE REPRODUCED IN ANY FORM OR TRANSMITTED IN WHOLE OR IN PART, WITHOUT PRIOR WRITTEN AUTHORIZATION OF PERQ SYSTEMS CORPORATION.

TITLE: Z80 MPU

e12.sp

PERQ

DESIGNED	WCH		SIZE	CODE	IDENTIFICATION	VAR	REV
DRAWN	13 Sep 82 16:45:01	SBokse	A	11	0006-	02	AN
UPDATED	APR/03/84	STECK	PROJ : ETHERNET IO BOARD W/ETHERNET Version B			PAGE 12 OF 56	

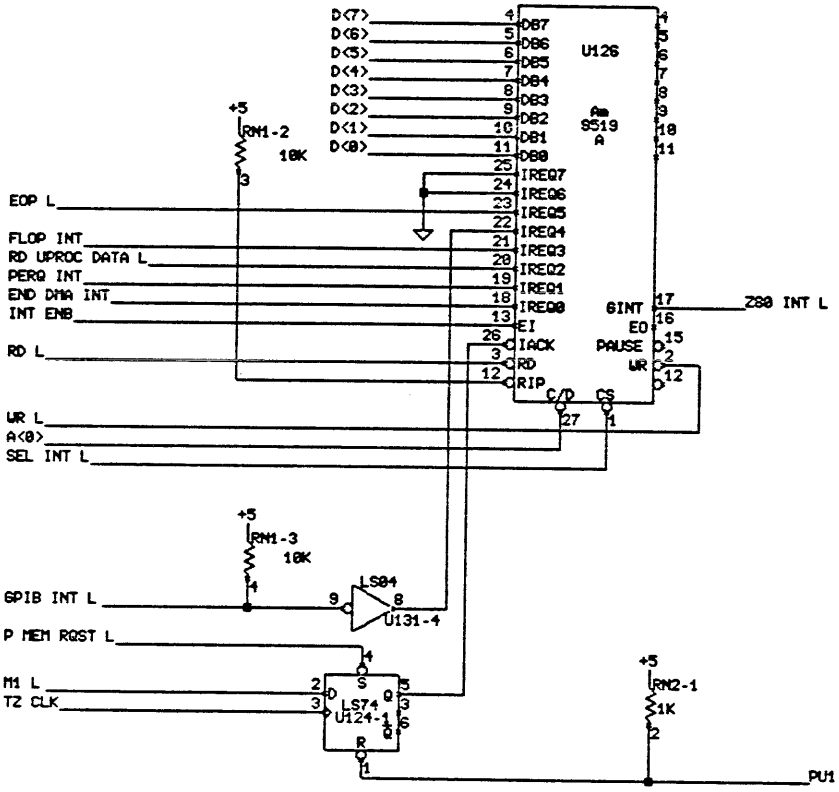

COPYRIGHT (c) 1984

THIS DOCUMENT IS NOT TO BE REPRODUCED IN ANY FORM OR TRANSMITTED IN WHOLE OR IN PART, WITHOUT PRIOR WRITTEN AUTHORIZATION OF PERQ SYSTEMS CORPORATION.

TITLE: Z80 INTERRUPTS

e13.dp

PERQ

DESIGNED	UCH		
DRAWN	13 Sep 82 16:45:01	SBokse	
UPDATED	APR/03/84	STECK	

SIZE	CODE	IDENTIFICATION	VAR	REV
A	1 1	0 0 0 6 -	0 2	AN

PROJ : ETHERNET IO BOARD U/ETHERNET Version B

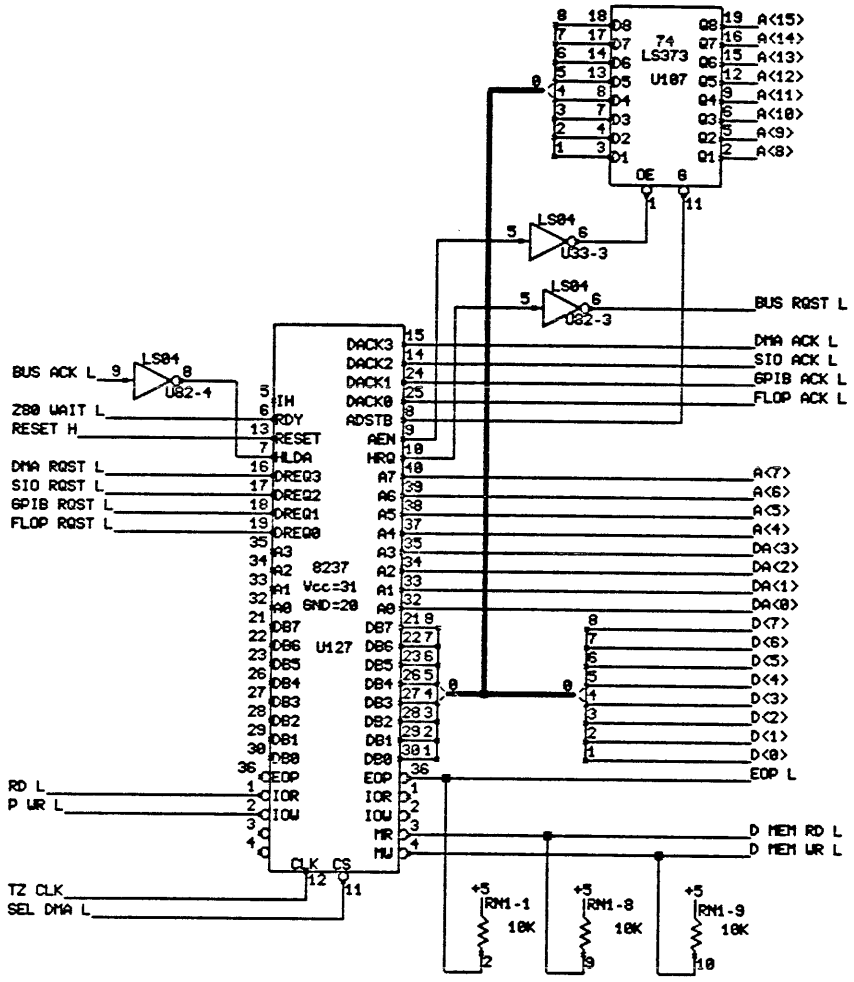

COPYRIGHT (c) 1984

THIS DOCUMENT IS NOT TO BE REPRODUCED IN ANY FORM OR TRANSMITTED IN WHOLE OR IN PART, WITHOUT PRIOR WRITTEN AUTHORIZATION OF PERQ SYSTEMS CORPORATION.

PERQ	TITLE	Z80 DMA					e14.db	
	DESIGNED	WCH		SIZE	CODE	IDENTIFICATION	VAR	REV
	DRAWN	13 Sep 82 16:45:01	SBokse	A	11	0006-	02	AM
	UPDATED	FEB-23-84	STECK	PROJ :	ETHERNET IO BOARD W/ETHERNET Version B		PAGE 14 OF 56	

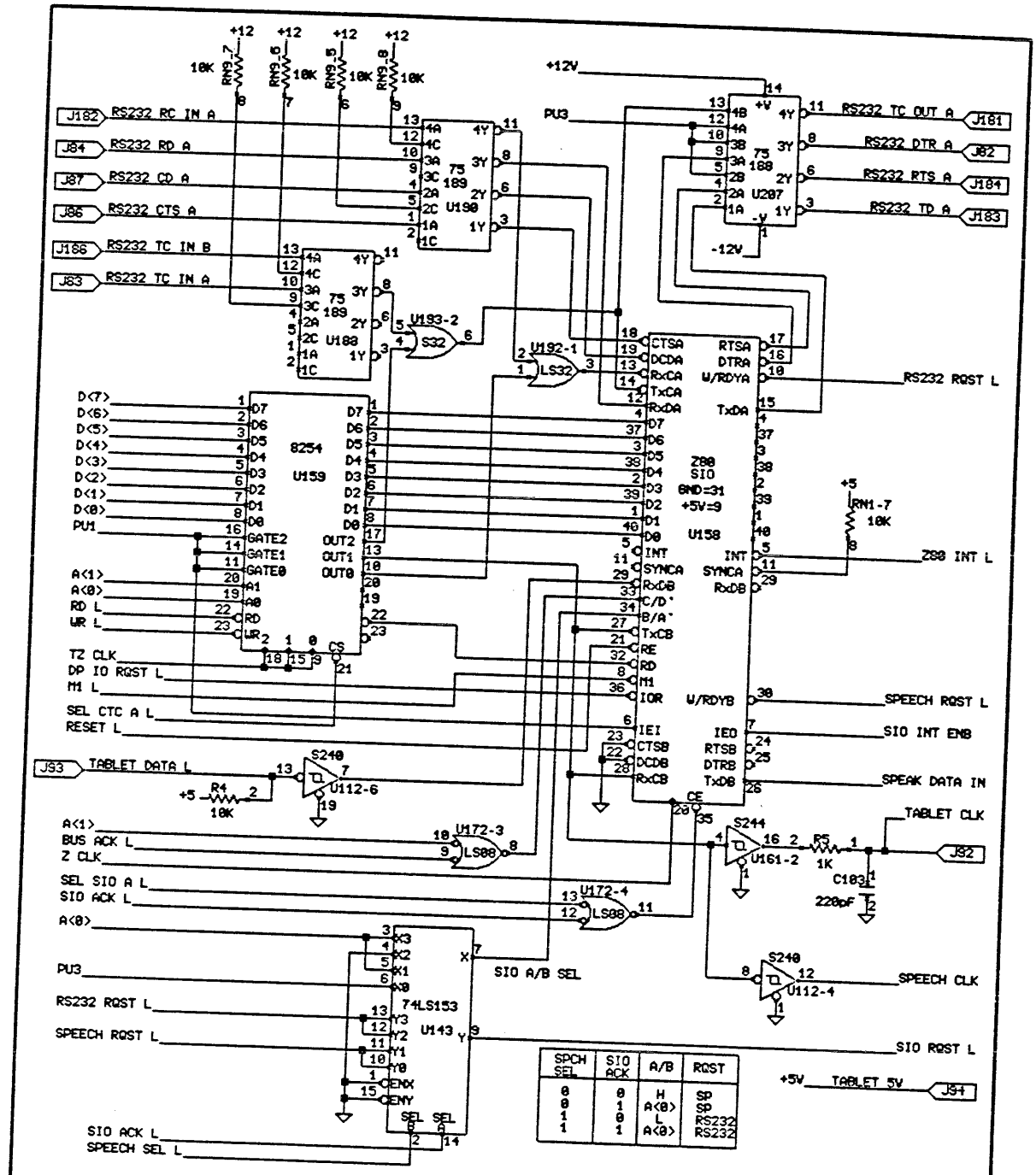

THIS DOCUMENT IS NOT TO BE REPRODUCED IN ANY FORM OR TRANSMITTED IN WHOLE OR IN PART, WITHOUT PRIOR WRITTEN AUTHORIZATION OF PERQ SYSTEMS CORPORATION.

COPYRIGHT (c) 1984

TITLE: Z80 SERIAL IO

e15.dp

PERQ

DESIGNED	UCH		
DRAWN	13 Sep 82 16:45:01	SBokse	
UPDATED	MAY/23/84	STECK	

SIZE	CODE	IDENTIFICATION	VAR	REV
A	11	0006-	02	AP

PROJ : ETHERNET IO BOARD W/ETHERNET Version B

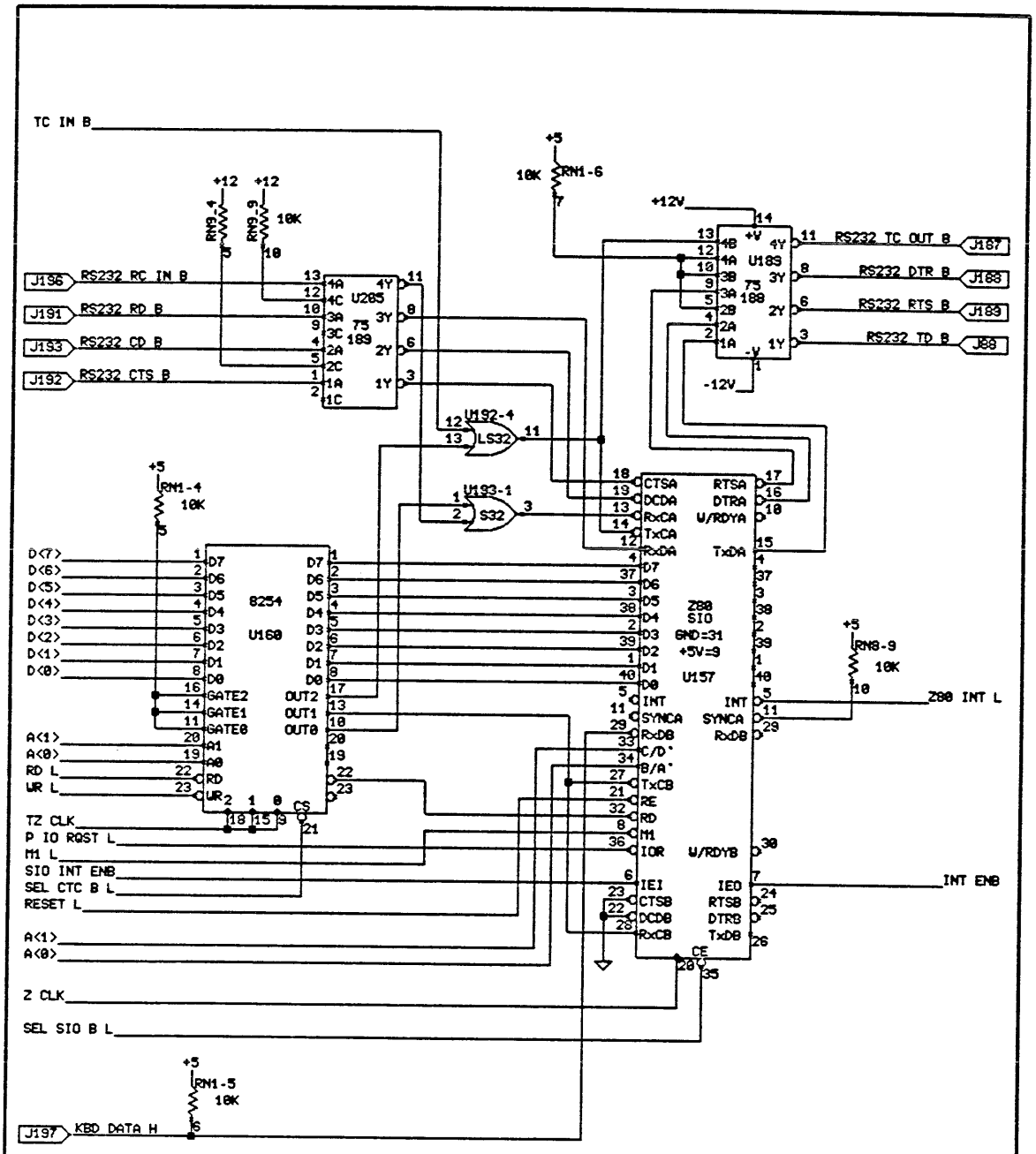

COPYRIGHT (c) 1984

THIS DOCUMENT IS NOT TO BE REPRODUCED IN ANY FORM OR TRANSMITTED IN WHOLE OR IN PART, WITHOUT PRIOR WRITTEN AUTHORIZATION OF PERQ SYSTEMS CORPORATION.

TITLE	Z80 SERIAL IO						e16.db
PERQ	DESIGNED	WCH		SIZE	CODE	IDENTIFICATION	VAR	REV
	DRAWN	13 Sep 82 16:45:01	SBoksa	A	11	0006-	02	AP
	UPDATED	MAY/23/84	STECK	PROJ :	ETHERNET IO BOARD W/ETHERNET Version B		PAGE 16 OF 56	

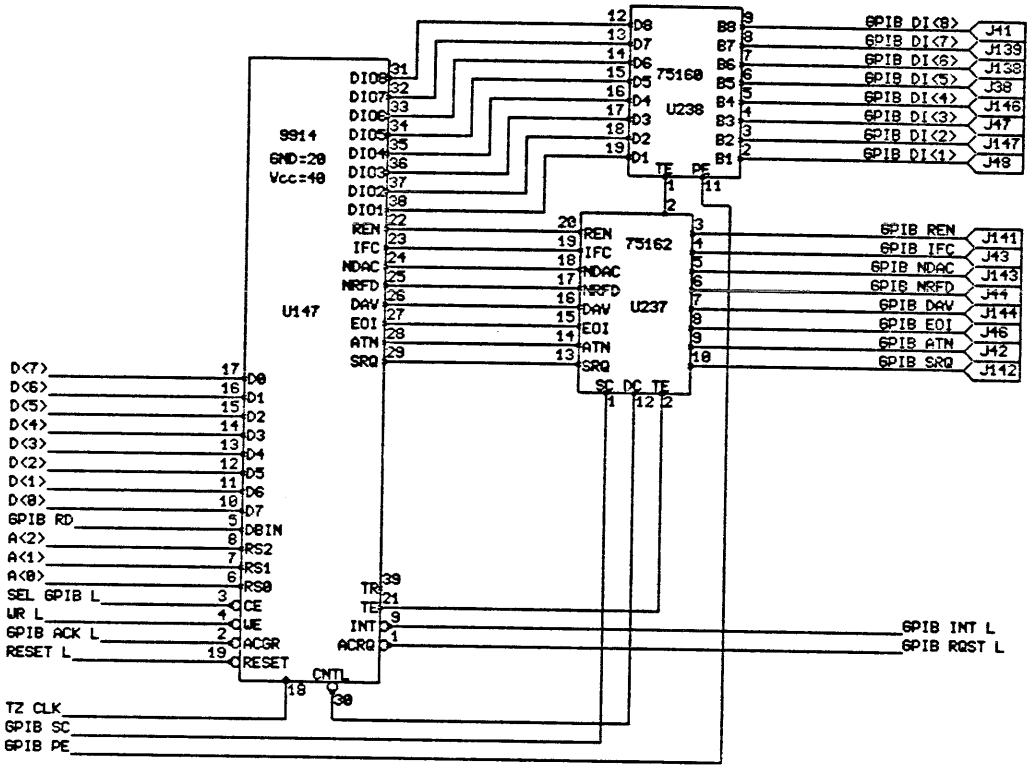

COPYRIGHT (c) 1984

THIS DOCUMENT IS NOT TO BE REPRODUCED IN ANY FORM OR TRANSMITTED IN WHOLE OR IN PART, WITHOUT PRIOR WRITTEN AUTHORIZATION OF PERQ SYSTEMS CORPORATION.

TITLE	Z80 GPIB IO						e17.dp	
PERQ	DESIGNED	UCH		SIZE	CODE	IDENTIFICATION	VAR	REV
	DRAWN	13 Sep 82 16:45:01	SBokse	A	11	0006 -	02	AN
	UPDATED	APR/03/84	STECK	PROJ :	ETHERNET IO BOARD W/ETHRNET Vesion B		PAGE 17 OF 56	

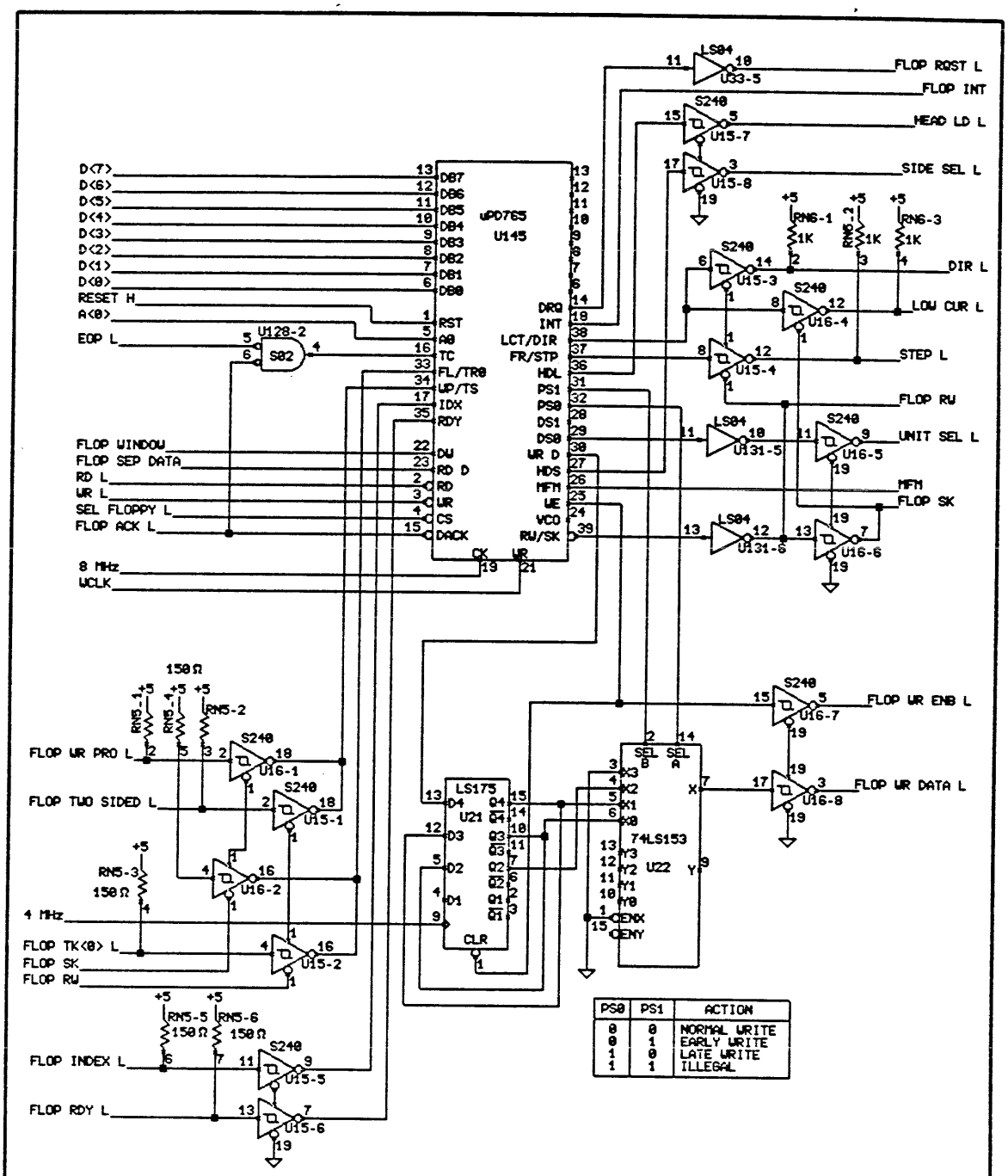

COPYRIGHT (c) 1984

THIS DOCUMENT IS NOT TO BE REPRODUCED IN ANY FORM OR TRANSMITTED IN WHOLE OR IN PART, WITHOUT PRIOR WRITTEN AUTHORIZATION OF PERQ SYSTEMS CORPORATION.

TITLE	Z80 FLOPPY		e18.db
DESIGNED	UCH		
DRAWN	13 Sep 82 16:45:01	SBokse	
UPDATED	APR/03/84	STECK	

SIZE	CODE	IDENTIFICATION	VAR	REV
A	11	0006-	02	AN

PROJ : ETHERNET IO BOARD W/ETHERNET Version B

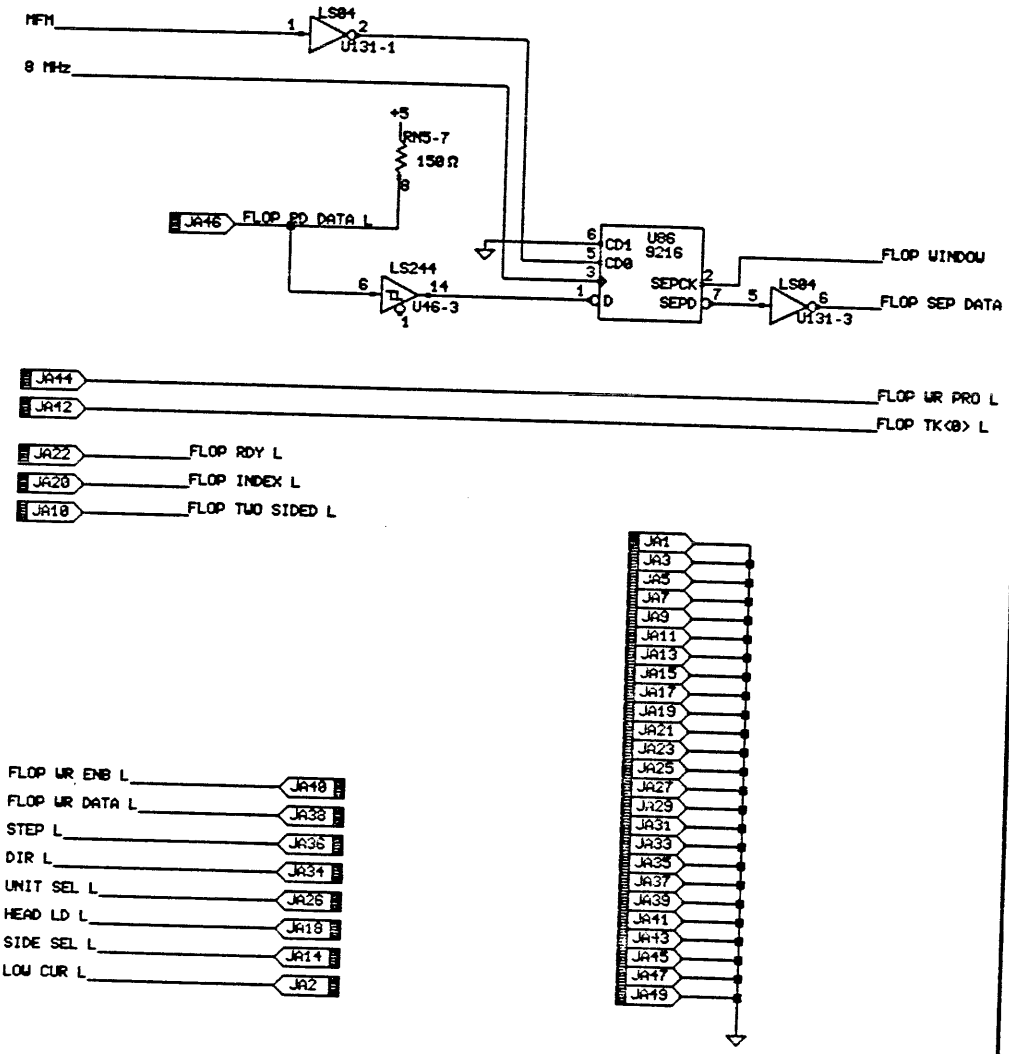

THIS DOCUMENT IS NOT TO BE REPRODUCED IN ANY FORM OR TRANSMITTED IN WHOLE OR IN PART, WITHOUT PRIOR WRITTEN AUTHORIZATION OF PERQ SYSTEMS CORPORATION.

COPYRIGHT (c) 1984

TITLE: FLOPPY DISK CONNECTOR

#19.db

PERQ

DESIGNED	UCH		SIZE	CODE	IDENTIFICATION	VAR	REV
DRAWN	13 Sep 82 16:45:01	SBokse	A	11	0006-	02	AN
UPDATED	APR/03/84	STECK	PROJ : ETHERNET IO BOARD U/ETHERNET Version B			PAGE 19 OF 56	

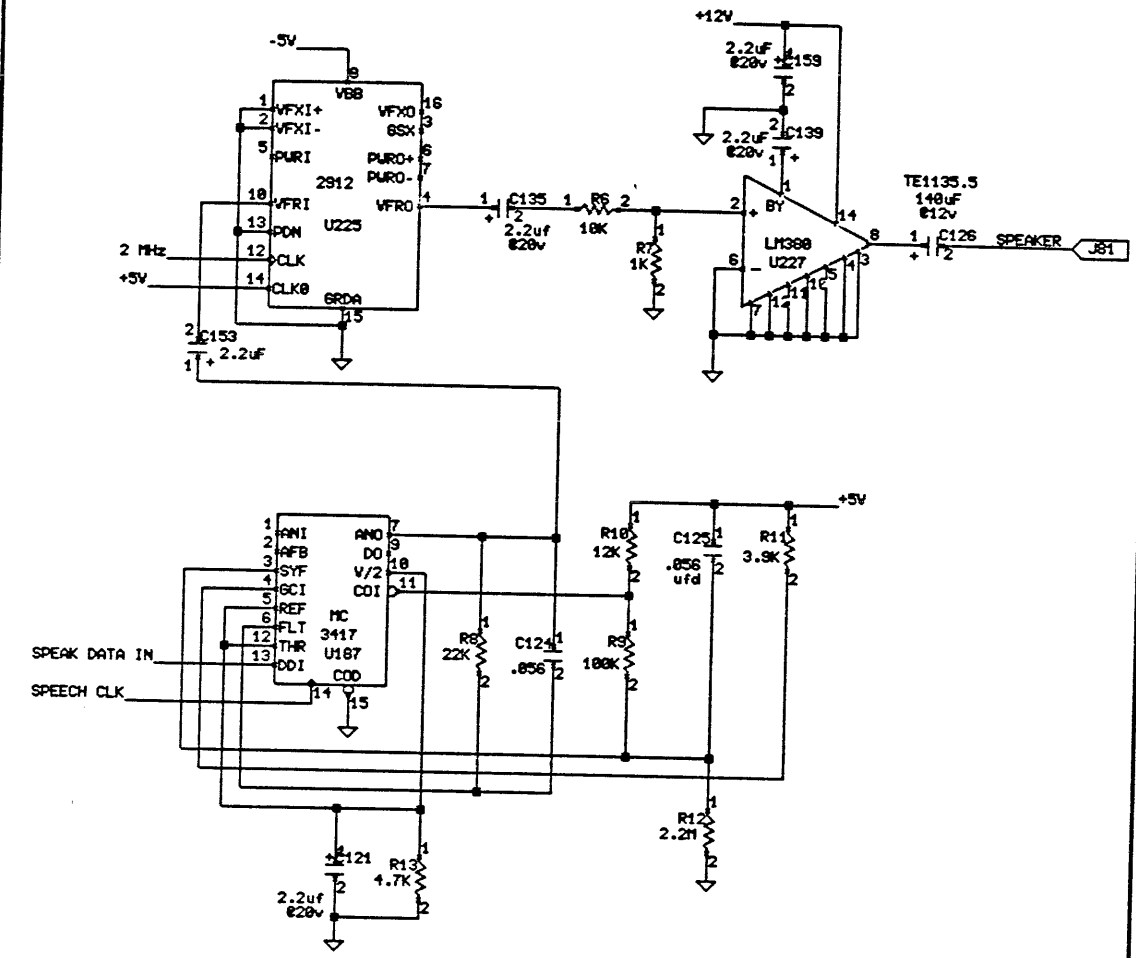

THIS DOCUMENT IS NOT TO BE REPRODUCED IN ANY FORM OR TRANSMITTED IN WHOLE OR IN PART, WITHOUT PRIOR WRITTEN AUTHORIZATION OF PERQ SYSTEMS CORPORATION.

COPYRIGHT (c) 1984

PERQ	TITLE	CVSD DEMODULATOR				e20.dp	
	DESIGNED	WCH		SIZE	CODE	IDENTIFICATION	VAR	REV
	DRAWN	13 Sep 82 16:45:01	SBokse	A	1 1	0 0 0 6 -	0 2	AN
	UPDATED	APR/03/84	STECK	PROJ :	ETHERNET IO BOARD W/ETHERNET Version B		PAGE 20 OF 56	

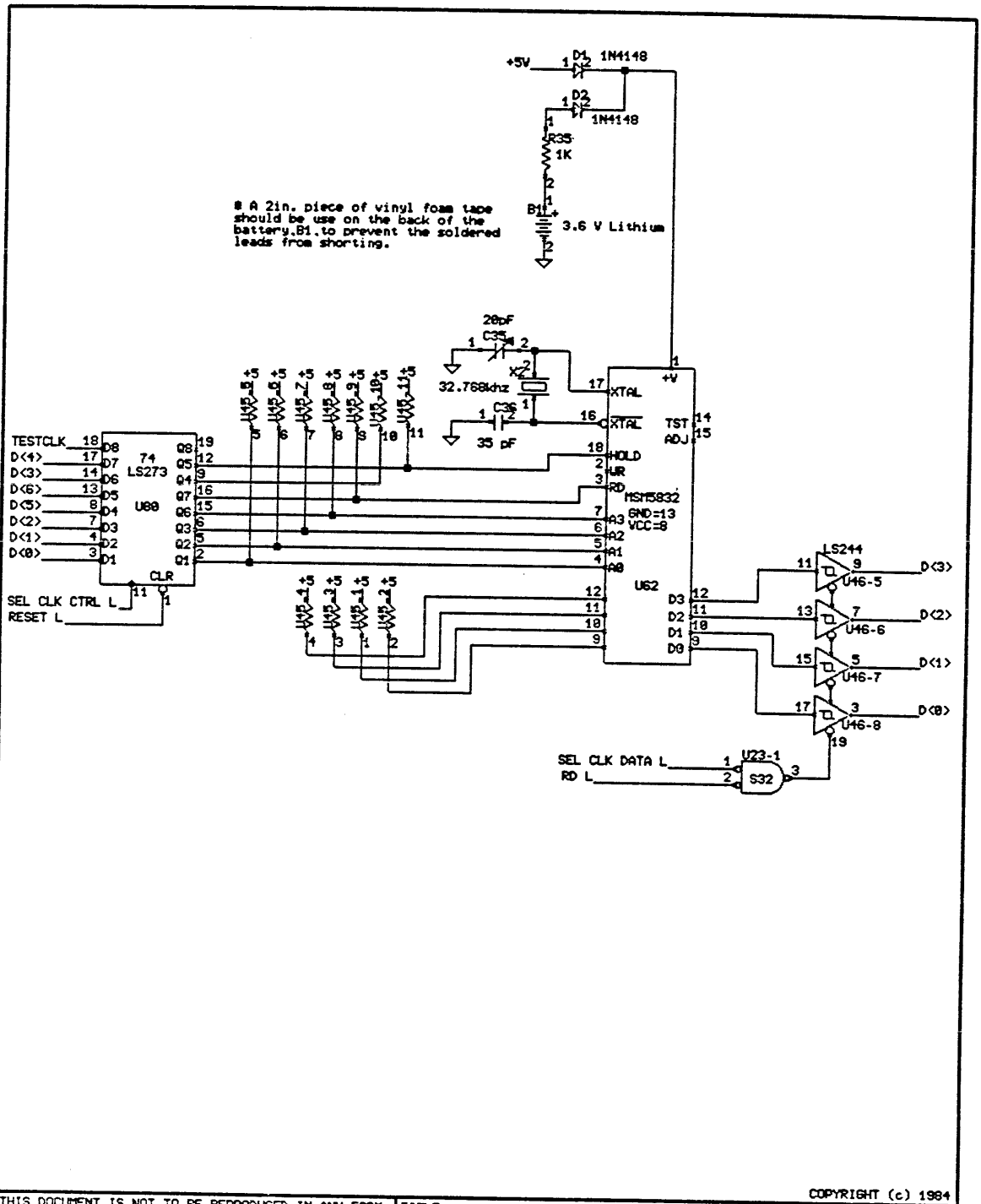

COPYRIGHT (c) 1984

THIS DOCUMENT IS NOT TO BE REPRODUCED IN ANY FORM OR TRANSMITTED IN WHOLE OR IN PART, WITHOUT PRIOR URITTEN AUTHORIZATION OF PERQ SYSTEMS CORPORATION.

TITLE: REAL TIME CLOCK

e21.db

PERQ

DESIGNED	UCH		
DRAUN	13 Sep 82 16:45:01	SBakse	
UPDATED	MAY/24/84	STECK	

SIZE	CODE	IDENTIFICATION	VAR	REV
A	11	0006-	02	A0

PROJ : ETHERNET IO BOARD U/ETHERNET Version B

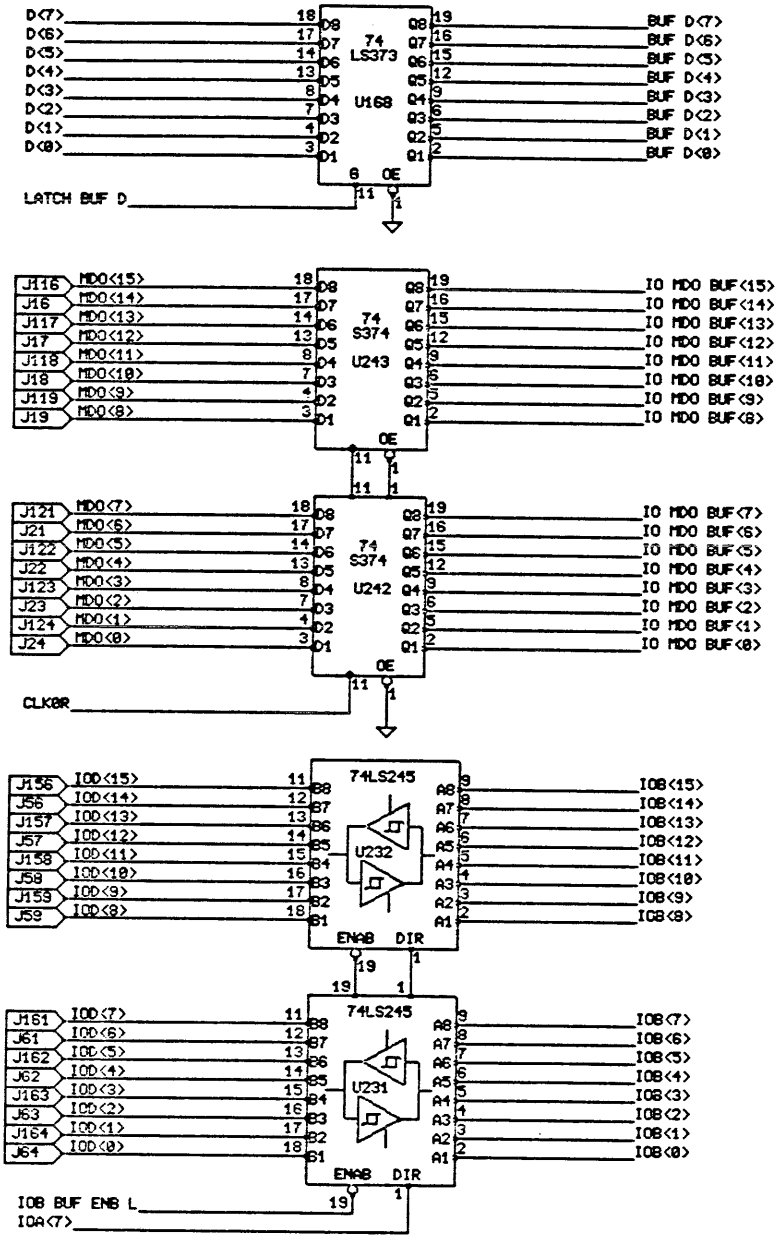

COPYRIGHT (c) 1984

THIS DOCUMENT IS NOT TO BE REPRODUCED IN ANY FORM OR TRANSMITTED IN WHOLE OR IN PART, WITHOUT PRIOR WRITTEN AUTHORIZATION OF PERQ SYSTEMS CORPORATION.

TITLE	EIO BUS BUFFERS					e22.db	
PERQ	DESIGNED	UCH		SIZE	CODE	IDENTIFICATION	VAR	REV
	DRAWN	13 Sep 82 16:45:01	SBakse	A	1 1	0 0 0 6 -	0 2	AN
	UPDATED	APR/03/84	STECK	PROJ :	ETHERNET IO BOARD W/ETHERNET Version B		PAGE 22 OF 56	

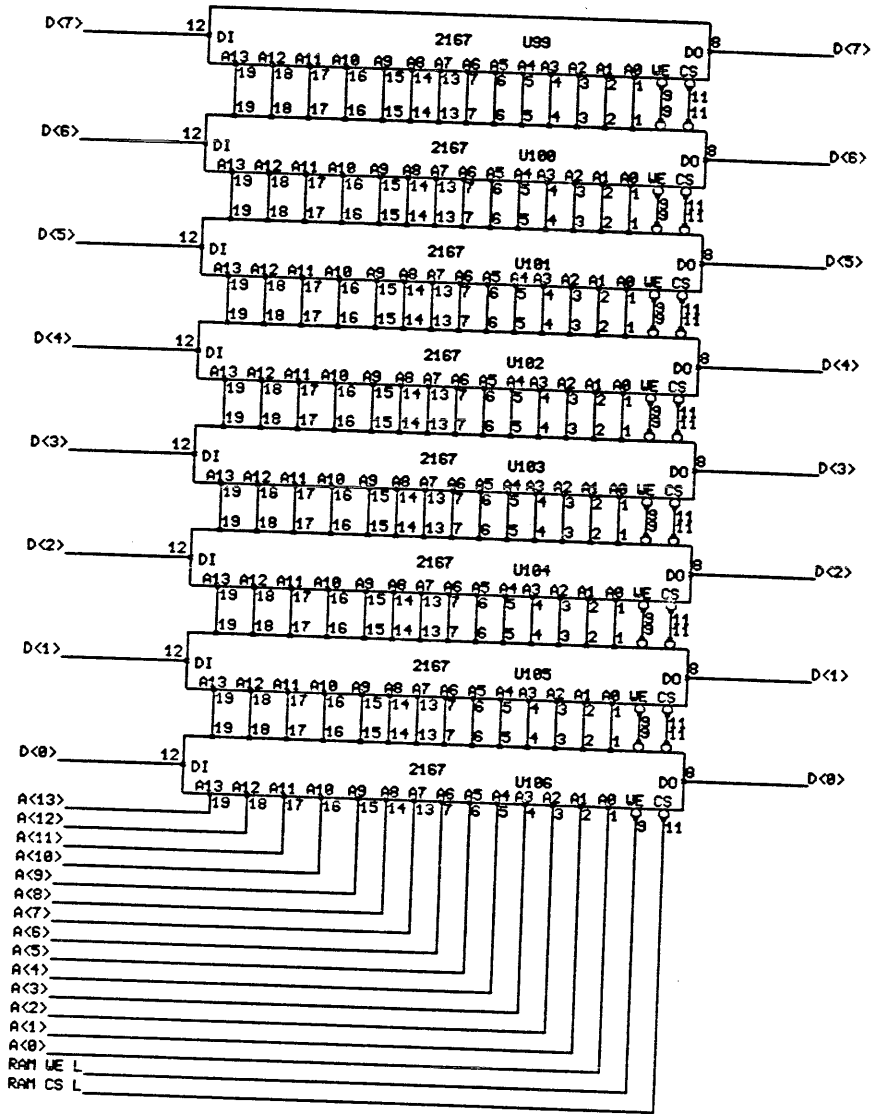

THIS DOCUMENT IS NOT TO BE REPRODUCED IN ANY FORM OR TRANSMITTED IN WHOLE OR IN PART, WITHOUT PRIOR WRITTEN AUTHORIZATION OF PERQ SYSTEMS CORPORATION.

COPYRIGHT (c) 1984

PERQ

TITLE	Z80 RAM					e23.db	
DESIGNED	WCH		SIZE	CODE	IDENTIFICATION	VAR	REV
DRAWN	13 Sep 82 16:45:01	SBokse	A	11	0006-	02	AN
UPDATED	APR/03/84	STECK	PROJ :	ETHERNET IO BOARD W/ETHERNET Version B		PAGE 23 OF 56	

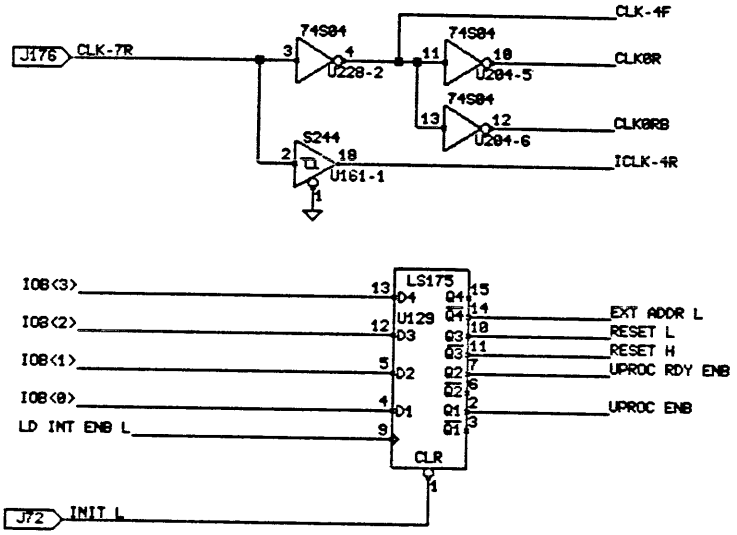

THIS DOCUMENT IS NOT TO BE REPRODUCED IN ANY FORM OR TRANSMITTED IN WHOLE OR IN PART, WITHOUT PRIOR WRITTEN AUTHORIZATION OF PERQ SYSTEMS CORPORATION.

COPYRIGHT (c) 1984

TITLE: IO BUS CONTROL & SYSTEM CLOCKS

e24.db

PERQ

DESIGNED	WCH		SIZE	CODE	IDENTIFICATION	VAR	REV
DRAWN	13 Sep 82 16:45:01	SBakse	A	1 1	0 0 0 6 -	0 2	AN
UPDATED	APR/03/84	STECK	PROJ :	ETHERNET IO BOARD W/ETHERNET Version B		PAGE 24 OF 56	

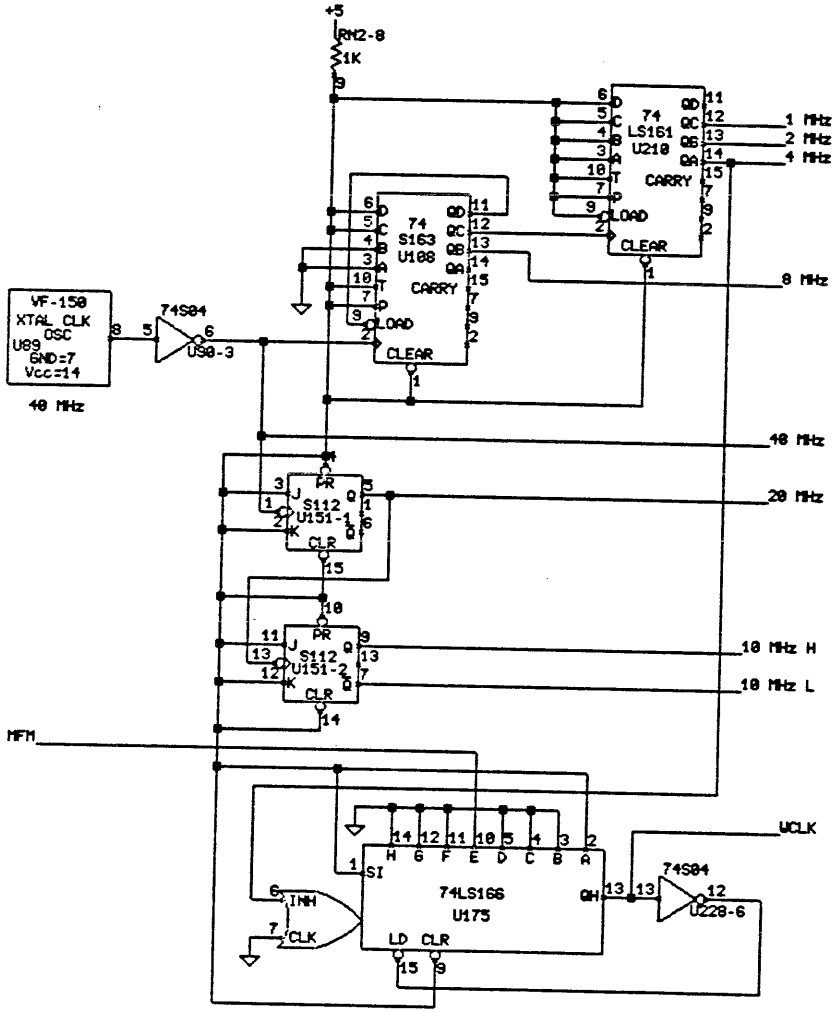

THIS DOCUMENT IS NOT TO BE REPRODUCED IN ANY FORM OR TRANSMITTED IN WHOLE OR IN PART, WITHOUT PRIOR WRITTEN AUTHORIZATION OF PERQ SYSTEMS CORPORATION.

COPYRIGHT (c) 1984

TITLE: Z80 CLOCKS

e25.db

PERQ

DESIGNED	WCH		
DRAWN	13 Sep 82 16:45:01	SBokse	
UPDATED	APR/03/84	STECK	

SIZE	CODE	IDENTIFICATION	VAR	REV
A	11	0006 -	02	AN

PROJ : ETHERNET IO BOARD W/ETHERNET Version B

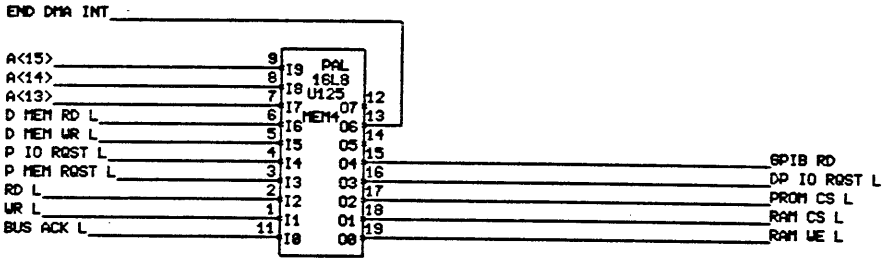

Z80 BOOT PROM

(FOR 6.3 & 6.4 SOFTWARE, USE PROM V100.017)

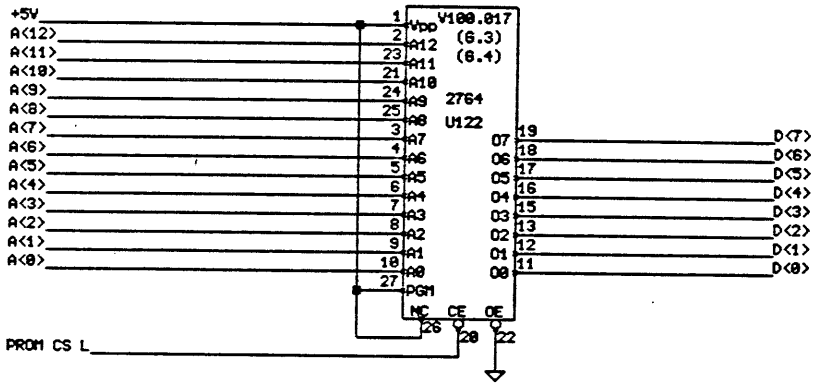

COPYRIGHT (c) 1984

THIS DOCUMENT IS NOT TO BE REPRODUCED IN ANY FORM OR TRANSMITTED IN WHOLE OR IN PART, WITHOUT PRIOR WRITTEN AUTHORIZATION OF PERQ SYSTEMS CORPORATION.

TITLE	MEMORY CONTROL						e26.db
PERQ	DESIGNED	UCH		SIZE	CODE	IDENTIFICATION	VAR	REV
	DRAWN	13 Sep 82 16:45:01	SBokse	A	1 1	0 0 0 6 -	0 2	AN
	UPDATED	APR/03/84	STECK	PROJ :	ETHERNET IO BOARD W/ETHERNET	Version B	PAGE 26 OF 56	

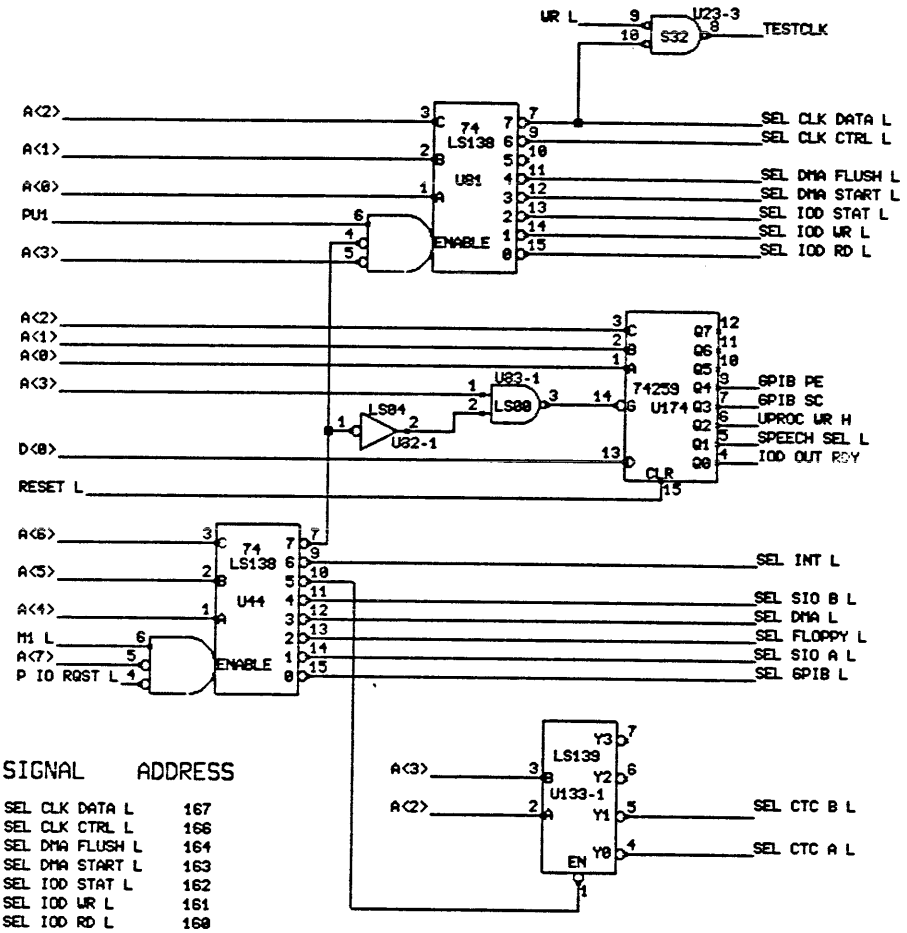

SIGNAL ADDRESS

SEL CLK DATA L	167
SEL CLK CTRL L	166
SEL DMA FLUSH L	164
SEL DMA START L	163
SEL IOD STAT L	162
SEL IOD WR L	161
SEL IOD RD L	160
GPIB PE	174
GPIB SC	173
UPROC WR H	172
SPEECH SEL L	171
IOD OUT RDY	170
SEL INT L	140:157
SEL CTC A L	120:127
SEL CTC B L	130:137
SEL SIO B L	100:117
SEL DMA L	60:77
SEL FLOPPY L	40:57
SEL SIO A L	20:37
SEL GPIB L	0:17

COPYRIGHT (c) 1984

THIS DOCUMENT IS NOT TO BE REPRODUCED IN ANY FORM OR TRANSMITTED IN WHOLE OR IN PART, WITHOUT PRIOR WRITTEN AUTHORIZATION OF PERQ SYSTEMS CORPORATION.

TITLE: Z80 ADDRESS DECODE

e27.db

PERQ

DESIGNED	UCH		
DRAWN	13 Sep 82 16:45:01	SBokse	
UPDATED	APR/03/84	STECK	

SIZE	CODE	IDENTIFICATION	VAR	REV
A	11	0006-	02	AN

PROJ : ETHERNET IO BOARD U/ETHERNET Version B

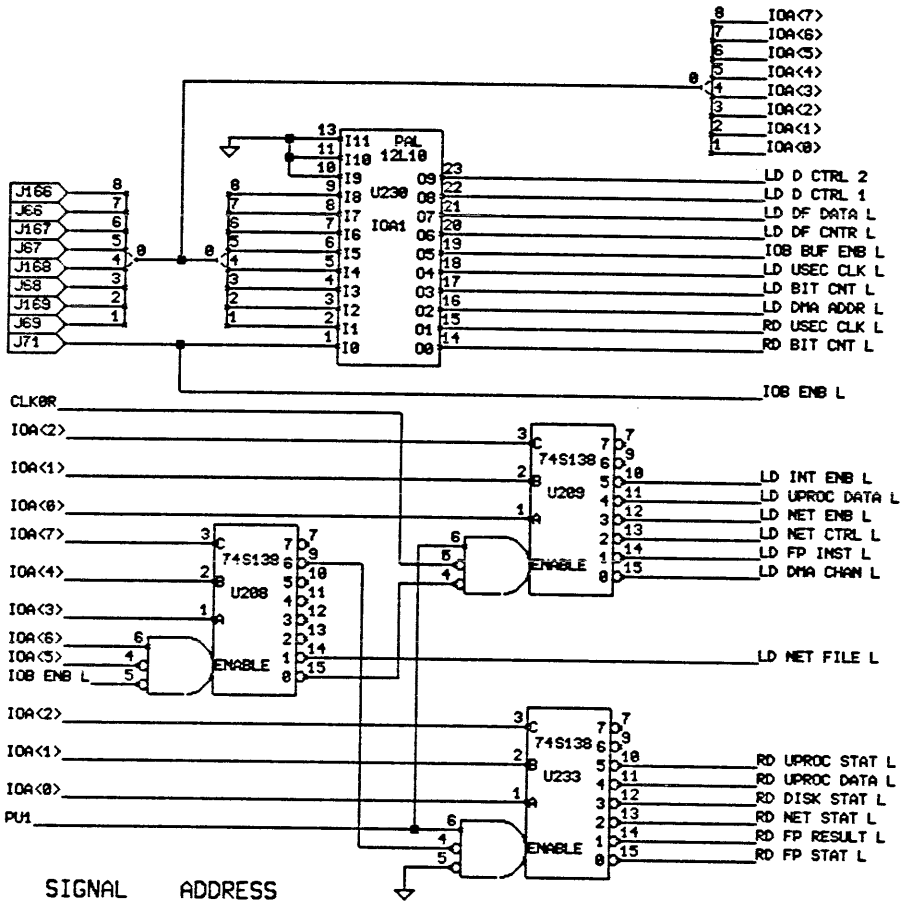

SIGNAL	ADDRESS
LD USEC CLK L	334:336
LD BIT CNT L	330:332
LD DMA ADDR L	324:327
RD USEC CLK L	136:137
RD BIT CNT L	132:133
LD INT ENB L	305
LD UPROC DATA L	304
LD NET ENB L	303
LD NET CTRL L	302
LD FP INST L	301
LD DMA CHAN L	300
LD NET FILE L	310:317
RD UPROC STAT L	125
RD UPROC DATA L	124
RD DISK STAT L	123
RD NET STAT L	122
RD FP RESULT L	121
RD FP STAT L	120

SIGNAL	ADDRESS
LD D CTRL 2	323
LD D CTRL 1	322
LD DF DATA L	321
LD DF CNTR L	320
IOB BUF ENB L	100:137 300:337

COPYRIGHT (c) 1984

THIS DOCUMENT IS NOT TO BE REPRODUCED IN ANY FORM OR TRANSMITTED IN WHOLE OR IN PART, WITHOUT PRIOR WRITTEN AUTHORIZATION OF PERQ SYSTEMS CORPORATION.

TITLE: IOA DECODES

e28.db

PERQ

DESIGNED	UCH	
DRAWN	13 Sep 82 16:45:01	SBokse
UPDATED	APR/03/84	STECK

SIZE	CODE	IDENTIFICATION	VAR	REV
A	11	0006-	02	AN

PROJ : ETHERNET IO BOARD W/ETHERNET Version B

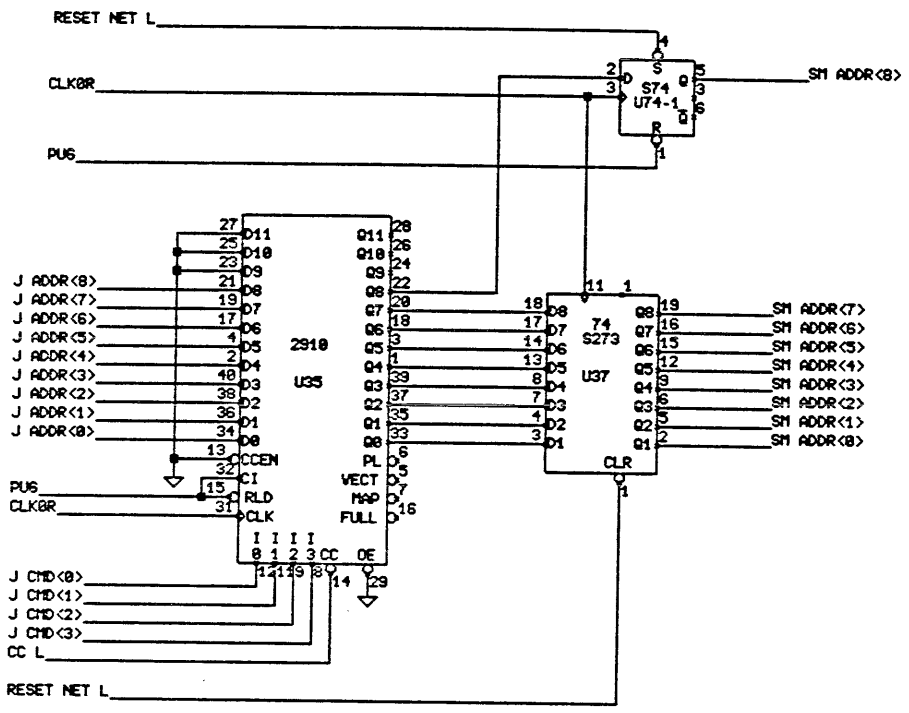

COPYRIGHT (c) 1984

THIS DOCUMENT IS NOT TO BE REPRODUCED IN ANY FORM OR TRANSMITTED IN WHOLE OR IN PART, WITHOUT PRIOR WRITTEN AUTHORIZATION OF PERQ SYSTEMS CORPORATION.

TITLE: STATE MACHINE

e29.dp

PERQ

DESIGNED	UCH		SIZE	CODE	IDENTIFICATION	VAR	REV
DRAWN	13 Sep 82 16:45:01	SBakse	A	1 1	0 0 0 6 -	0 2	AN
UPDATED	APR/03/84	STECK	PROJ : ETHERNET IO BOARD U/ETHERNET Version B			PAGE 29 OF 56	

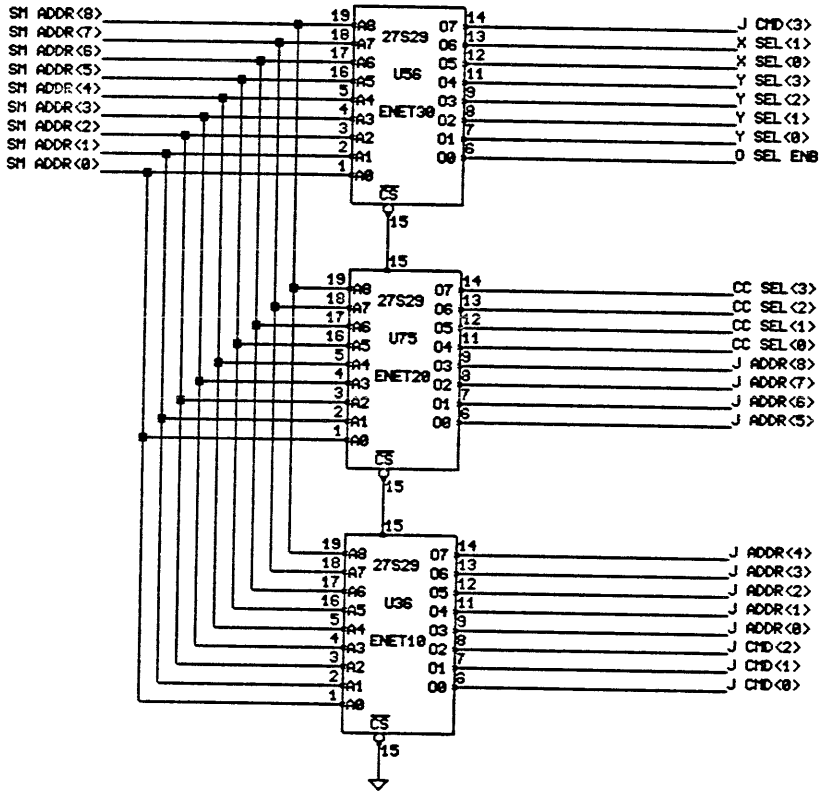

COPYRIGHT (c) 1984

THIS DOCUMENT IS NOT TO BE REPRODUCED IN ANY FORM OR TRANSMITTED IN WHOLE OR IN PART, WITHOUT PRIOR WRITTEN AUTHORIZATION OF PERQ SYSTEMS CORPORATION.

TITLE: STATE MACHINE

e30.db

PERQ

DESIGNED	WCH		SIZE	CODE	IDENTIFICATION	VAR	REV
DRAWN	13 Sep 82 16:45:01	SBokse	A	11	0006-	02	AN
UPDATED	APR/03/84	STECK	PROJ : ETHERNET IO BOARD W/ETHERRNET Version B			PAGE 30 OF 56	

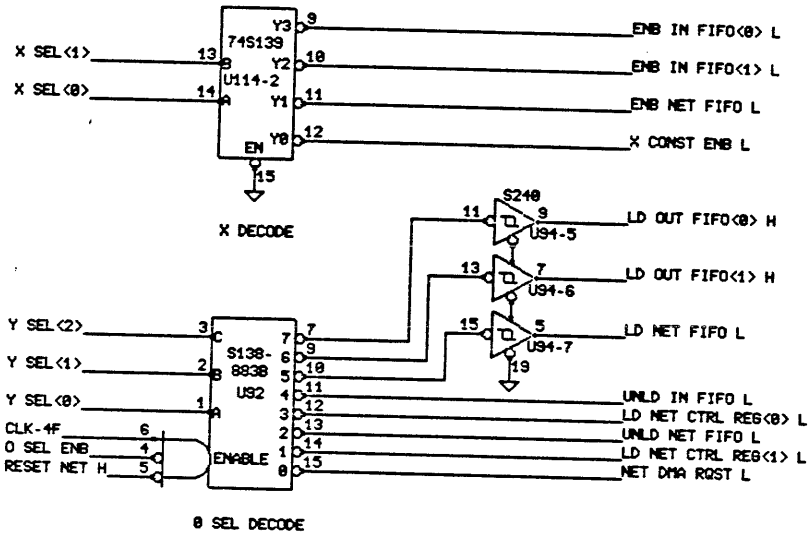

THIS DOCUMENT IS NOT TO BE REPRODUCED IN ANY FORM OR TRANSMITTED IN WHOLE OR IN PART, WITHOUT PRIOR WRITTEN AUTHORIZATION OF PERQ SYSTEMS CORPORATION.

COPYRIGHT (c) 1984

TITLE: STATE MACHINE

e31.db

PERQ

DESIGNED	WCH		SIZE	CODE	IDENTIFICATION	VAR	REV
DRAWN	13 Sep 82 16:45:01	SBokse	A	11	0006-	02	AN
UPDATED	APR/03/84	STECK	PROJ : ETHERNET IO BOARD W/ETHERNET Version B			PAGE 31 OF 56	

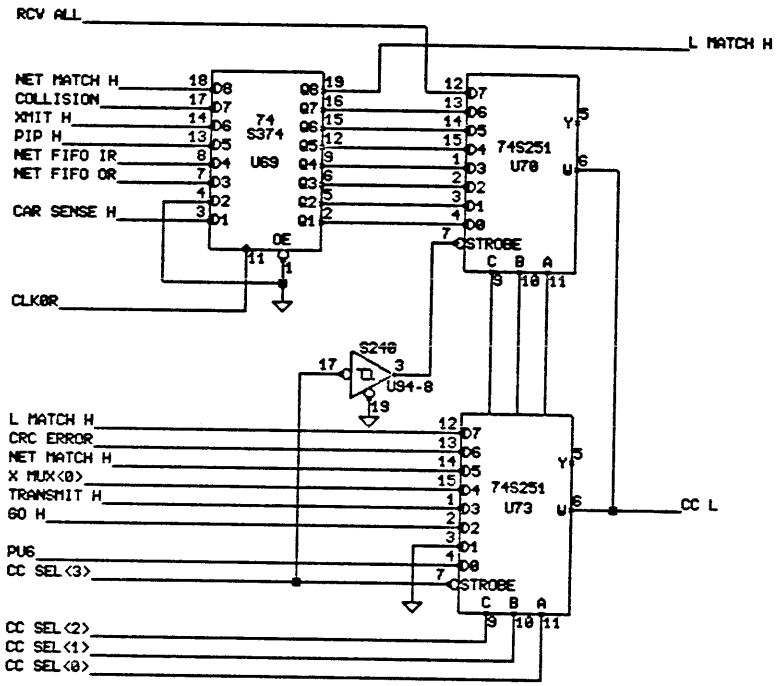

COPYRIGHT (c) 1984

THIS DOCUMENT IS NOT TO BE REPRODUCED IN ANY FORM OR TRANSMITTED IN WHOLE OR IN PART, WITHOUT PRIOR WRITTEN AUTHORIZATION OF PERQ SYSTEMS CORPORATION.

TITLE: STATE MACHINE

e32.db

PERQ

DESIGNED	UCH		
DRAWN	13 Sep 82 16:45:01	SBakse	
UPDATED	APR/03/84	STECK	

SIZE	CODE	IDENTIFICATION	VAR	REV
A	1 1	0 0 0 6 -	0 2	AN

PROJ : ETHERNET IO BOARD W/ETHERNET Version B

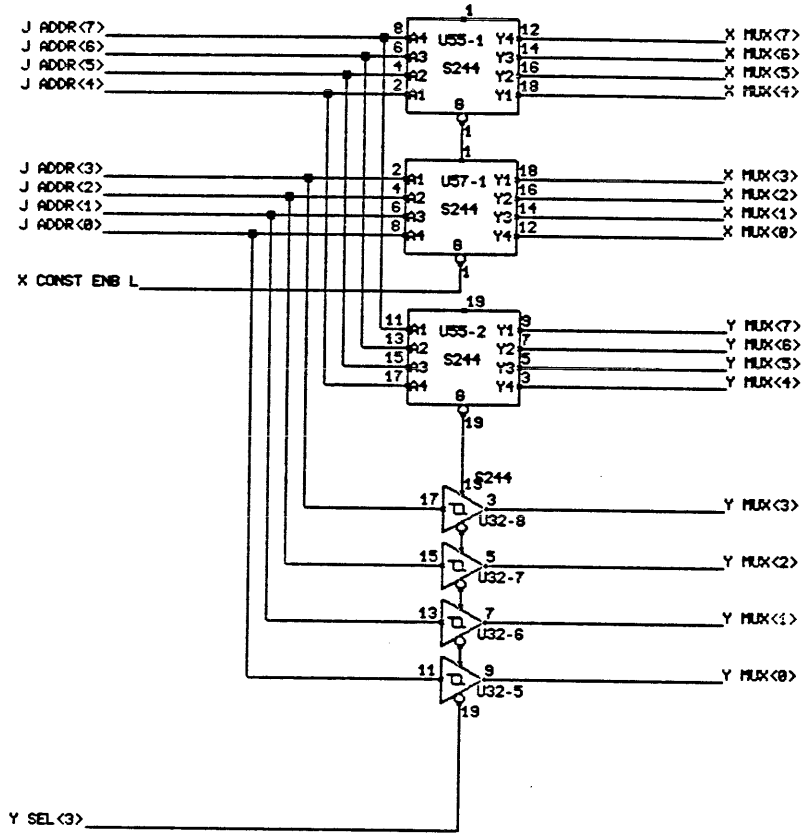

COPYRIGHT (c) 1984

THIS DOCUMENT IS NOT TO BE REPRODUCED IN ANY FORM OR TRANSMITTED IN WHOLE OR IN PART, WITHOUT PRIOR WRITTEN AUTHORIZATION OF PERQ SYSTEMS CORPORATION.

TITLE: NET CONTROLLER CONSTANTS

e33.db

PERQ

DESIGNED	UCH		
DRAWN	13 Sep 82 16:45:01	SBokse	
UPDATED	APR/03/84	STECK	

SIZE	CODE	IDENTIFICATION	VAR	REV
A	1 1	0 0 0 6 -	0 2	AN

PROJ : ETHERNET IO BOARD U/ETHERNET Version B

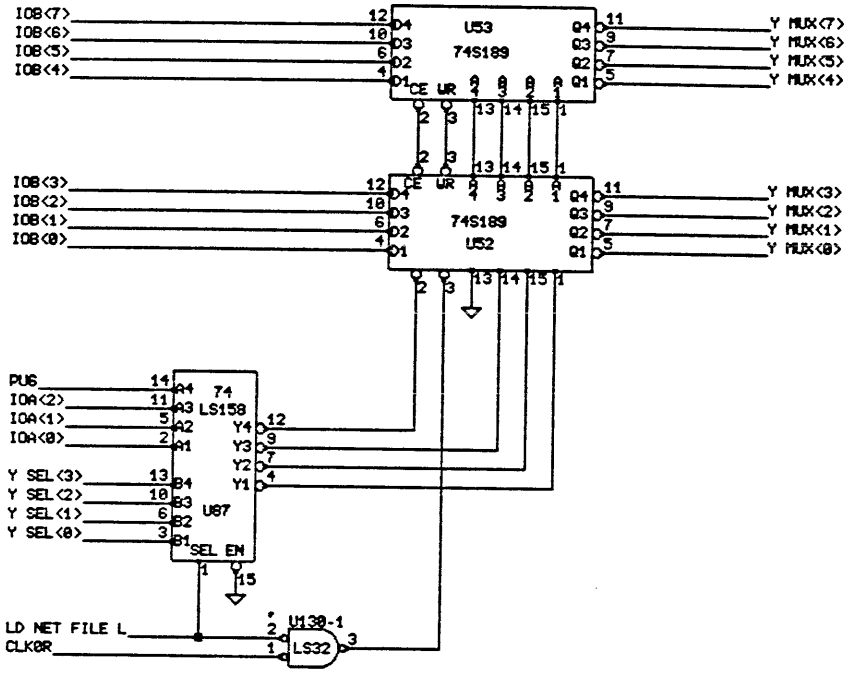

COPYRIGHT (c) 1984

THIS DOCUMENT IS NOT TO BE REPRODUCED IN ANY FORM OR TRANSMITTED IN WHOLE OR IN PART, WITHOUT PRIOR WRITTEN AUTHORIZATION OF PERQ SYSTEMS CORPORATION.

TITLE: NET REGISTER FILE

e34.dp

PERQ

DESIGNED	UCH		SIZE	CODE	IDENTIFICATION	VAR	REV
DRAWN	13 Sep 82 16:45:01	SBokse	A	11	0006-	02	AN
UPDATED	APR/03/84	STECK	PROJ : ETHERNET IO BOARD W/ETHERNET Version B			PAGE 34 OF 56	

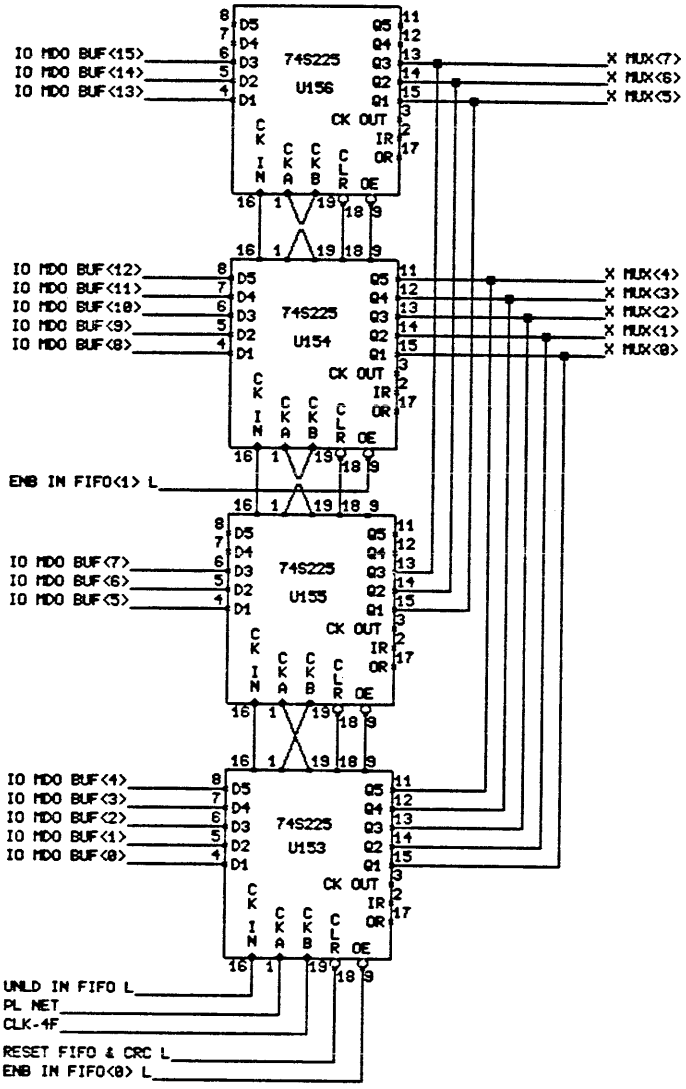

COPYRIGHT (c) 1984

THIS DOCUMENT IS NOT TO BE REPRODUCED IN ANY FORM OR TRANSMITTED IN WHOLE OR IN PART, WITHOUT PRIOR WRITTEN AUTHORIZATION OF PERQ SYSTEMS CORPORATION.

TITLE: NET MDO FIFO

e35.dp

PERQ

DESIGNED	MCH		
DRAWN	13 Sep 82 16:45:01	SBokse	
UPDATED	APR/03/84	STECK	

SIZE	CODE	IDENTIFICATION	VAR	REV
A	11	0006-	02	AN

PROJ : ETHERNET IO BOARD W/ETHERNET Version B

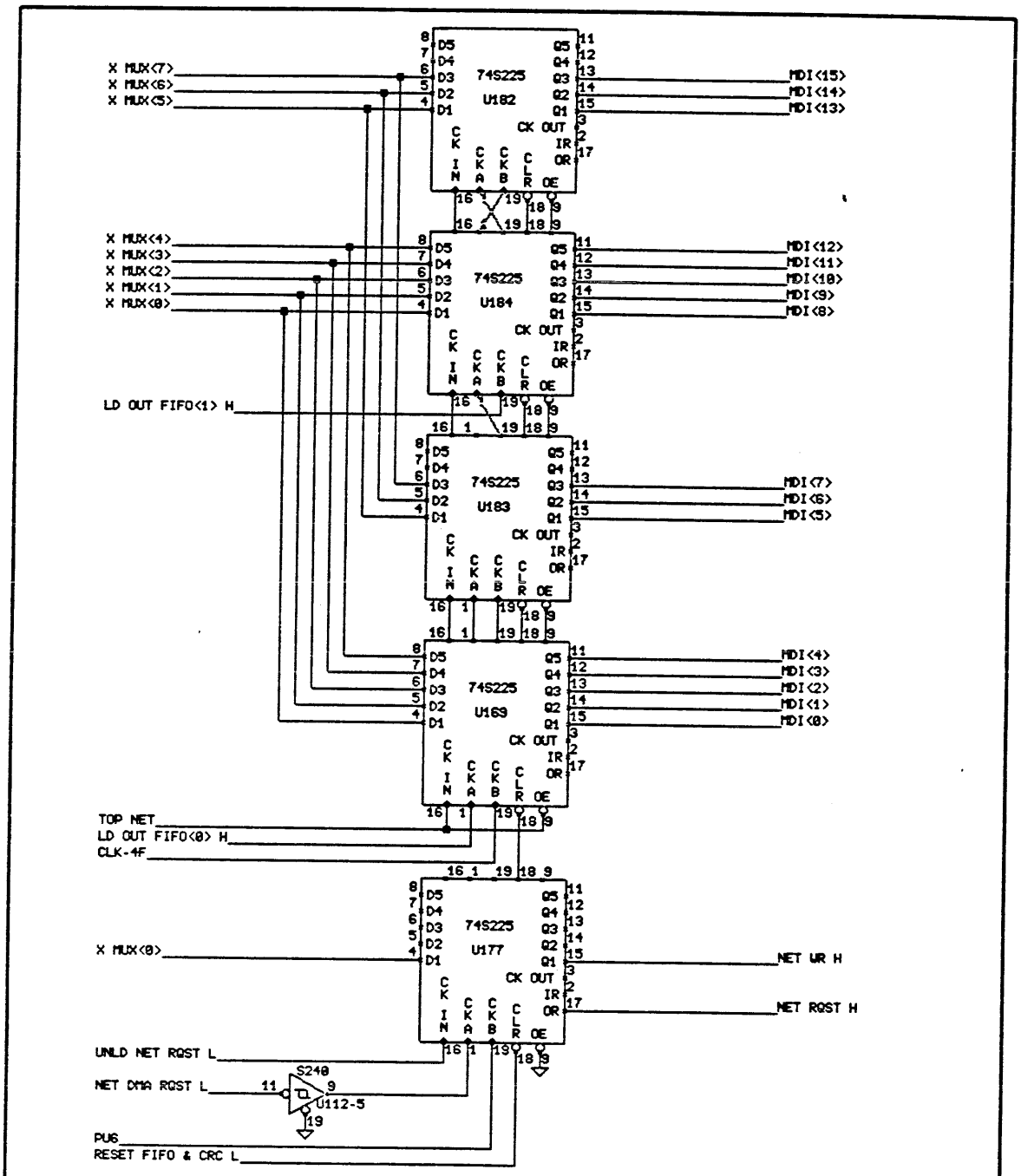

COPYRIGHT (c) 1984

THIS DOCUMENT IS NOT TO BE REPRODUCED IN ANY FORM OR TRANSMITTED IN WHOLE OR IN PART, WITHOUT PRIOR WRITTEN AUTHORIZATION OF PERQ SYSTEMS CORPORATION.

TITLE: NET MDI FIFO

e36.dp

PERQ

DESIGNED	UCH		
DRAWN	13 Sep 82 16:45:01	SBokse	
UPDATED	APR/03/84	STECK	

SIZE	CODE	IDENTIFICATION	VAR	REV
A	11	0006-	02	AM

PROJ : ETHERNET IO BOARD U/ETHERNET Version B

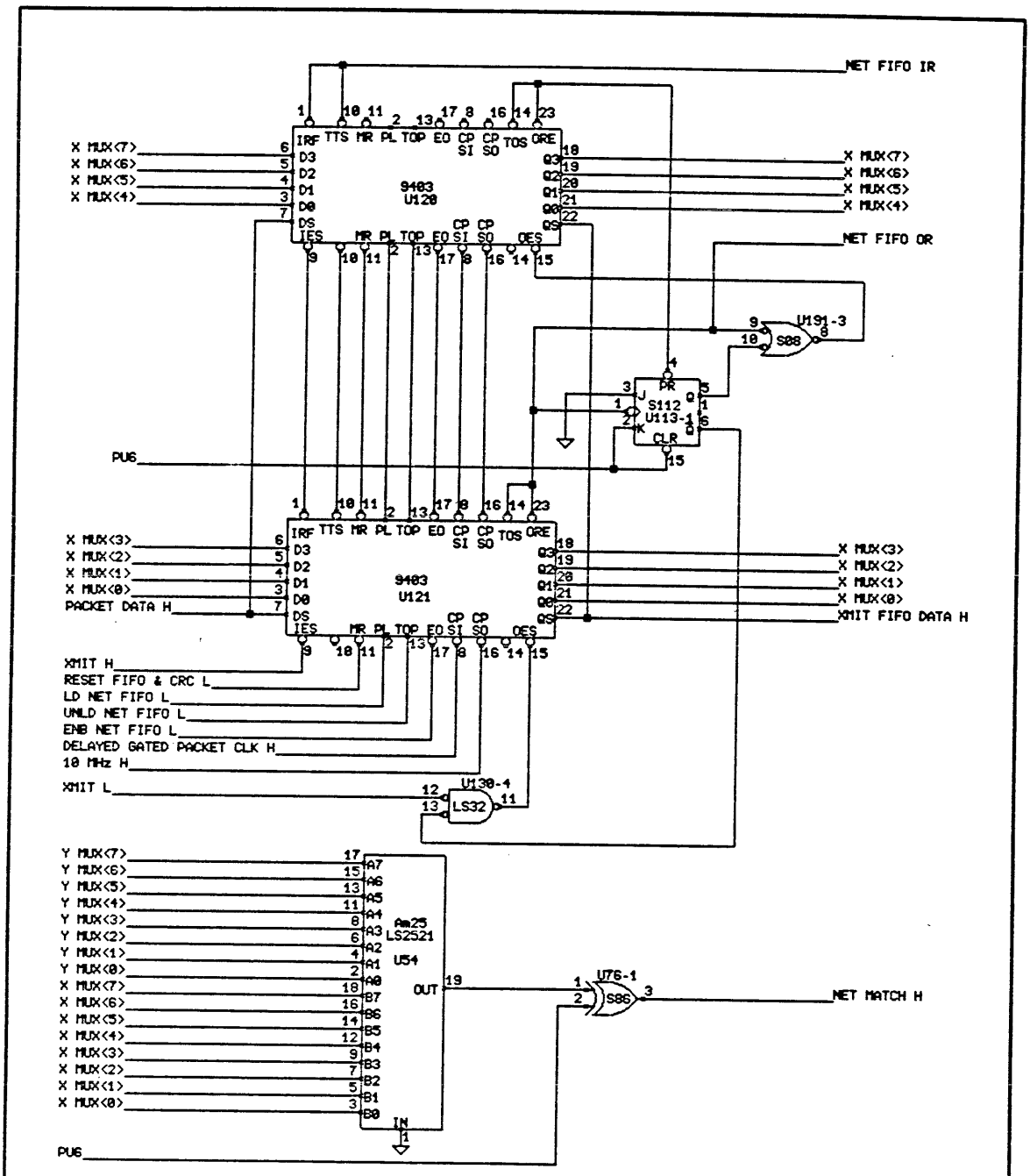

COPYRIGHT (c) 1984

THIS DOCUMENT IS NOT TO BE REPRODUCED IN ANY FORM OR TRANSMITTED IN WHOLE OR IN PART, WITHOUT PRIOR WRITTEN AUTHORIZATION OF PERQ SYSTEMS CORPORATION.

TITLE: NET FIFO

e37.dp

PERQ

DESIGNED	UCH		
DRAWN	13 Sep 82 16:45:01	SBokse	
UPDATED	APR/03/84	STECK	

SIZE	CODE	IDENTIFICATION	VAR	REV
A	11	0006-	02	AN

PROJ : ETHERNET IO BOARD W/ETHERNET Version B

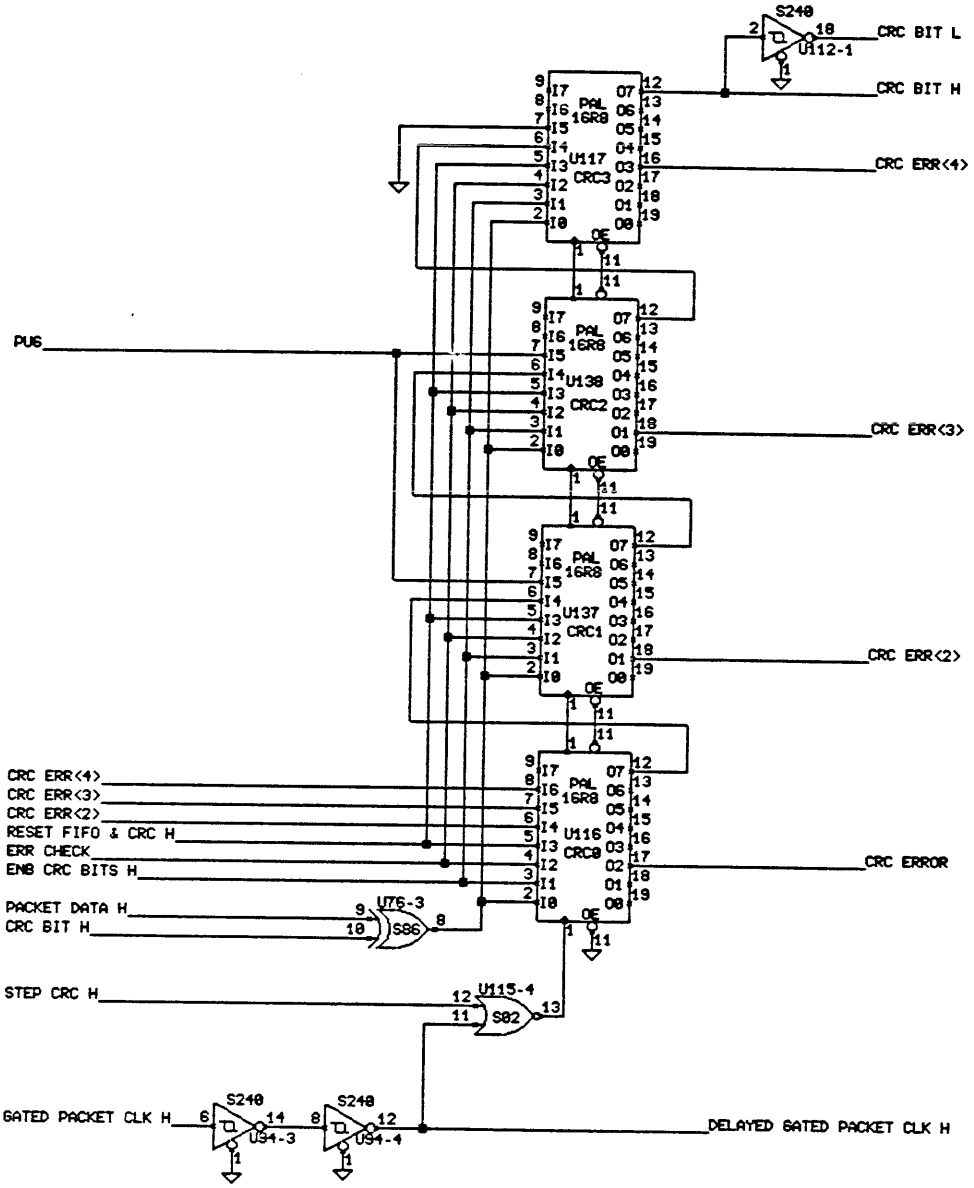

COPYRIGHT (c) 1984

THIS DOCUMENT IS NOT TO BE REPRODUCED IN ANY FORM OR TRANSMITTED IN WHOLE OR IN PART, WITHOUT PRIOR WRITTEN AUTHORIZATION OF PERQ SYSTEMS CORPORATION.

TITLE: NET CONTROLLER

e38.db

PERQ

DESIGNED	WCH		
DRAWN	13 Sep 82 16:45:01	SBakse	
UPDATED	APR/03/84	STECK	

SIZE	CODE	IDENTIFICATION	VAR	REV
A	11	0006-	02	AN

PROJ : ETHERNET IO BOARD W/ETHERNET Version B

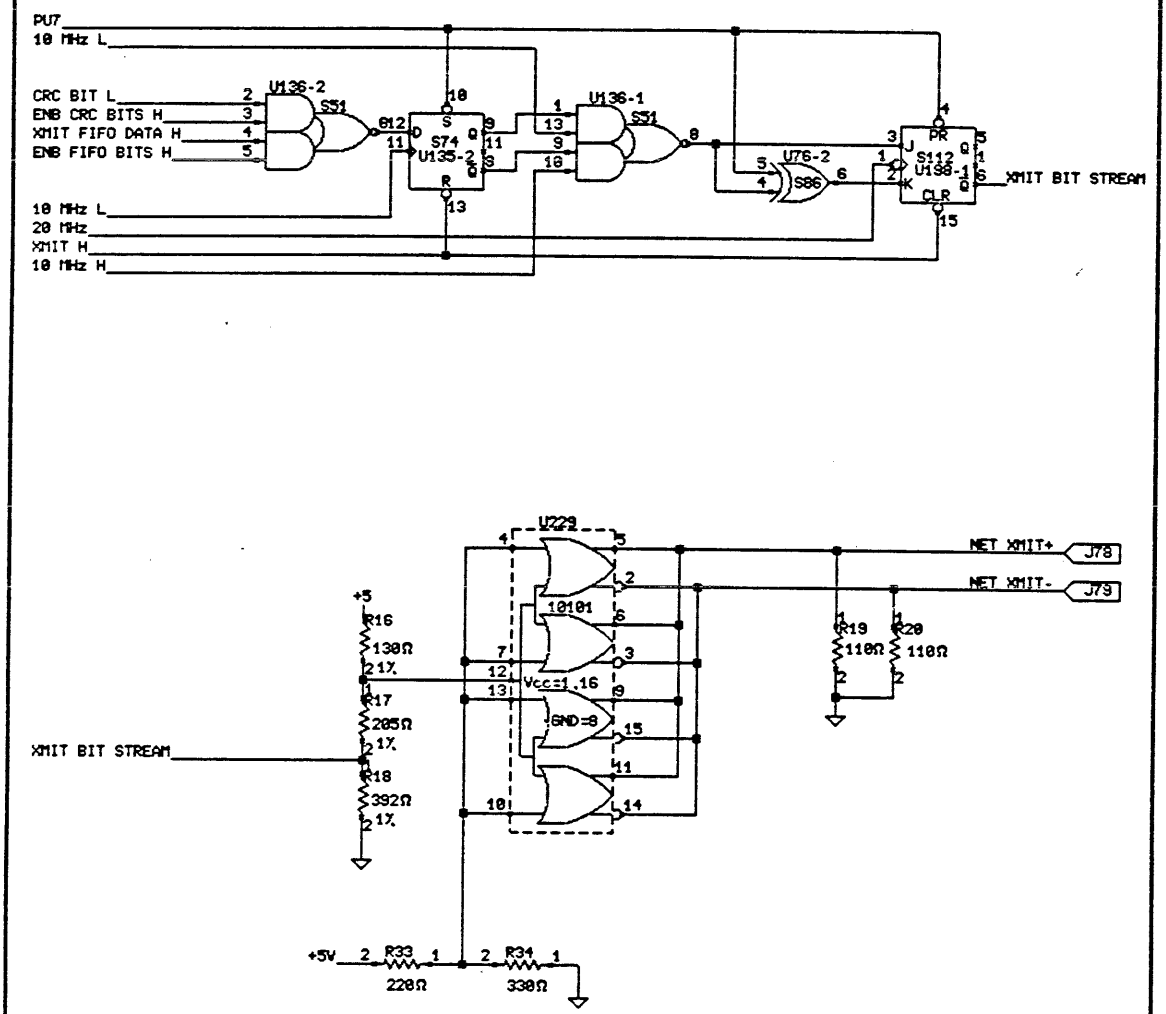

COPYRIGHT (c) 1984

THIS DOCUMENT IS NOT TO BE REPRODUCED IN ANY FORM OR TRANSMITTED IN WHOLE OR IN PART, WITHOUT PRIOR WRITTEN AUTHORIZATION OF PERQ SYSTEMS CORPORATION.

TITLE: XMIT DECODES

e39.db

PERQ

DESIGNED	WCH		
DRAWN	13 Sep 82 16:45:01	SBokse	
UPDATED	APR/03/84	STECK	

SIZE	CODE	IDENTIFICATION	VAR	REV
A	11	0006-	02	AN

PROJ : ETHERNET IO BOARD W/ETHERNET Version B

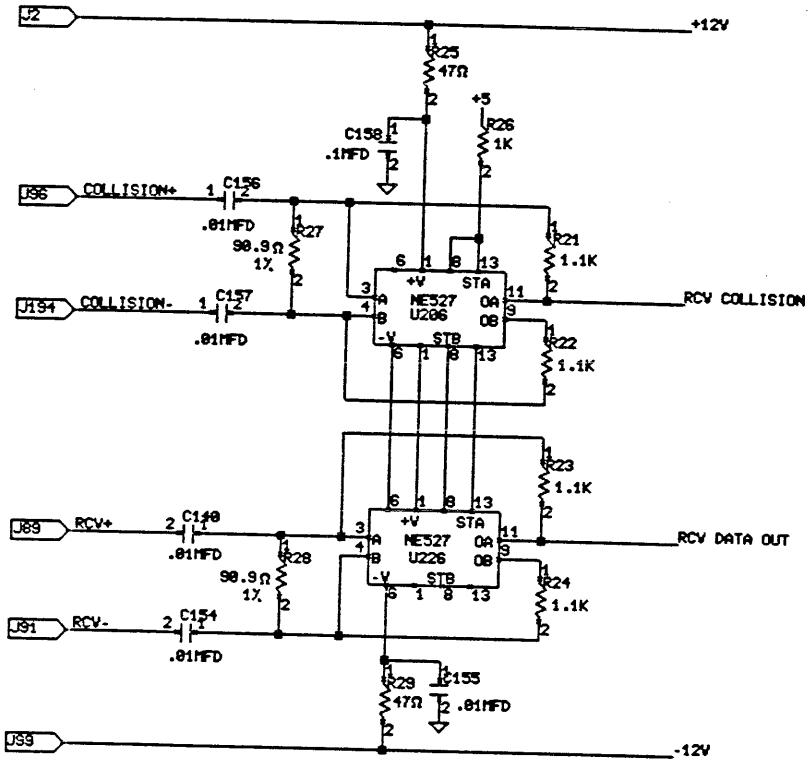

THIS DOCUMENT IS NOT TO BE REPRODUCED IN ANY FORM OR TRANSMITTED IN WHOLE OR IN PART, WITHOUT PRIOR WRITTEN AUTHORIZATION OF PERQ SYSTEMS CORPORATION.

COPYRIGHT (c) 1984

PERQ

DESIGNED	WCH	
DRAWN	13 Sep 82 16:15:01	SBakse
UPDATED	APR/03/84	STECK

TITLE: DATA RECOVERY

e10.dp

SIZE	CODE	IDENTIFICATION	VAR	REV
A	11	0006-	02	AN

PROJ : ETHERNET IO BOARD W/ETHERNET Version B

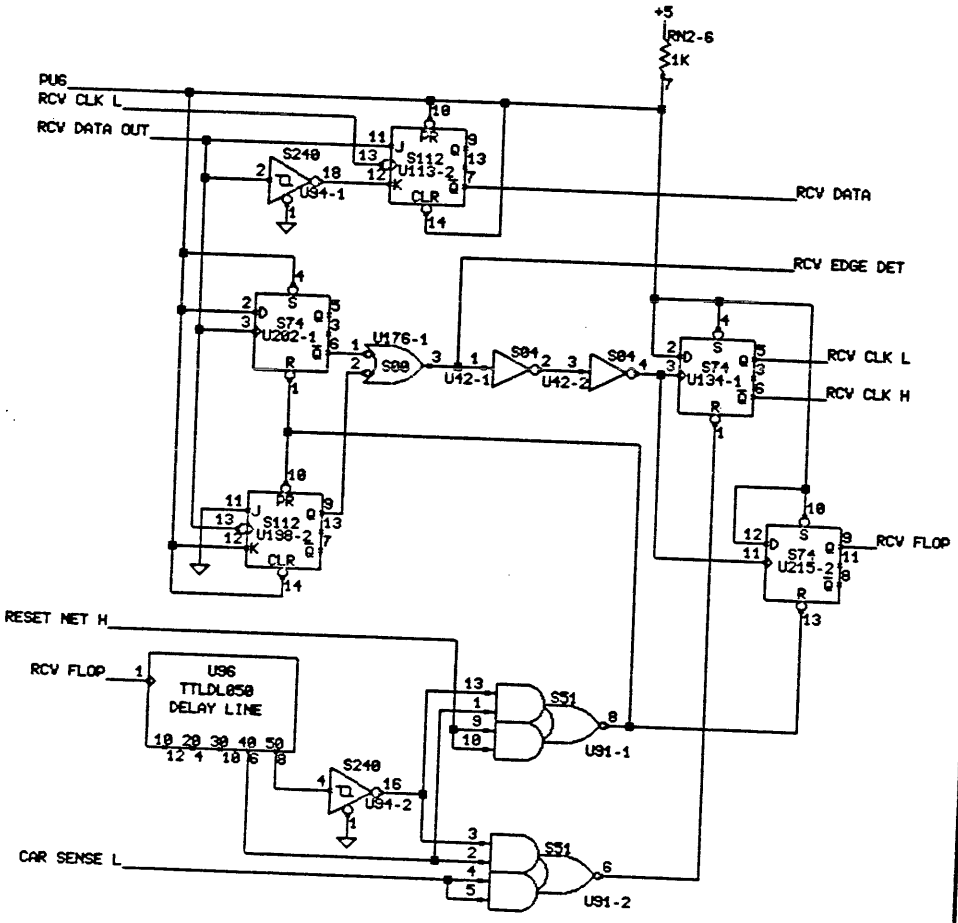

THIS DOCUMENT IS NOT TO BE REPRODUCED IN ANY FORM OR TRANSMITTED IN WHOLE OR IN PART, WITHOUT PRIOR WRITTEN AUTHORIZATION OF PERQ SYSTEMS CORPORATION.

COPYRIGHT (c) 1984

TITLE: DATA RECOVERY

e41.db

PERQ

DESIGNED	WCH	
DRAWN	13 Sep 82 16:45:01	SBokse
UPDATED	18 Jan 85	STECK

SIZE	CODE	IDENTIFICATION	VAR	REV
A	1 1	0 0 0 6 -	0 2	AT

PROJ : ETHERNET IO BOARD W/ETHERNET Version B

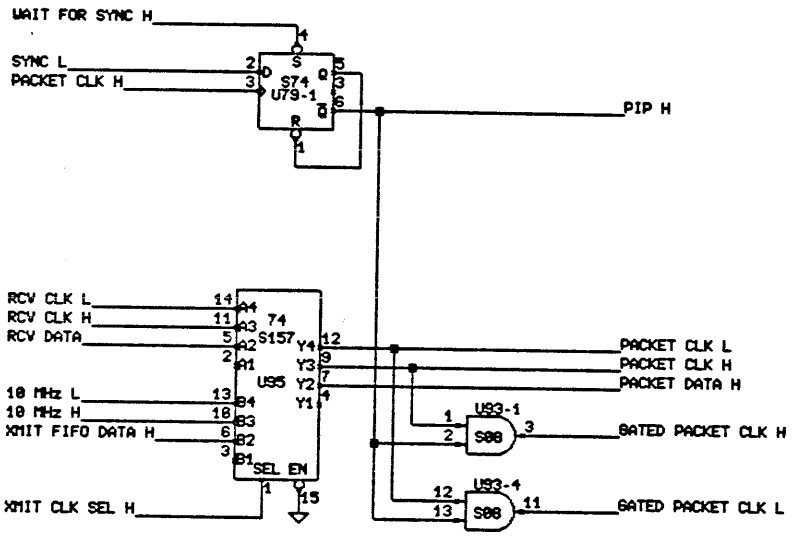

COPYRIGHT (c) 1984

THIS DOCUMENT IS NOT TO BE REPRODUCED IN ANY FORM OR TRANSMITTED IN WHOLE OR IN PART, WITHOUT PRIOR WRITTEN AUTHORIZATION OF PERQ SYSTEMS CORPORATION.

TITLE: SYNC DETECT

e42.dp

PERQ

DESIGNED	WCH		
DRAWN	13 Sep 82 16:45:01	SBokse	
UPDATED	APR/03/84	STECK	

SIZE	CODE	IDENTIFICATION	VAR	REV
A	11	0006-	02	AN

PROJ : ETHERNET IO BOARD U/ETHERNET Version B

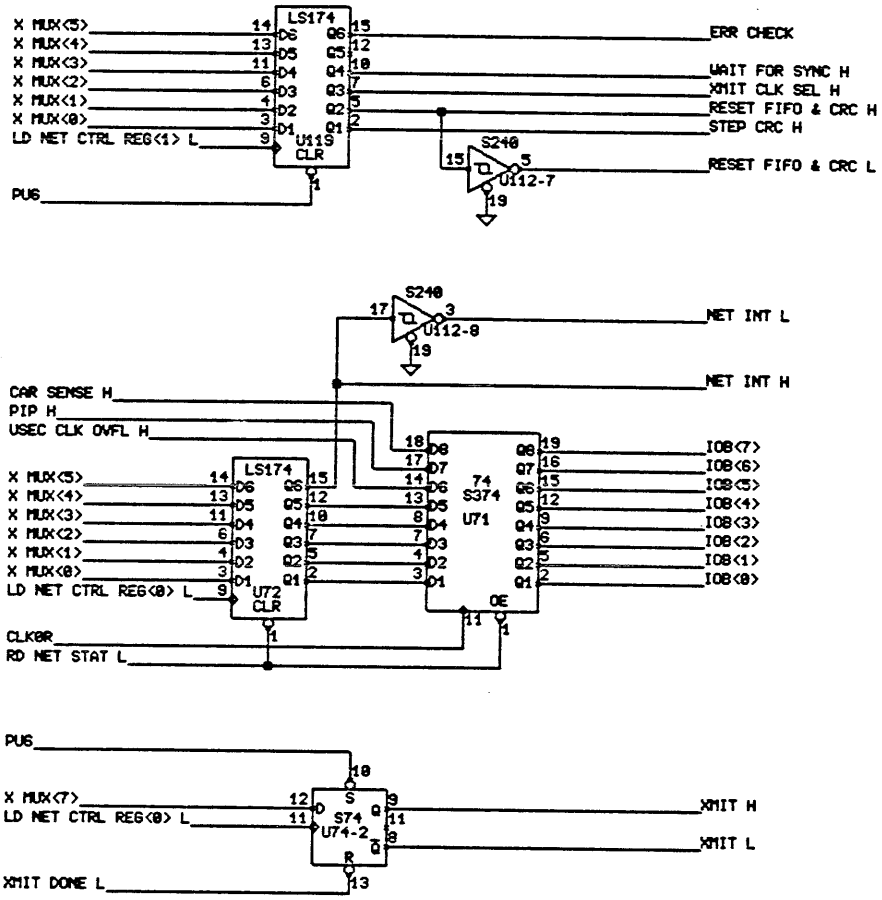

COPYRIGHT (c) 1984

THIS DOCUMENT IS NOT TO BE REPRODUCED IN ANY FORM OR TRANSMITTED IN WHOLE OR IN PART, WITHOUT PRIOR WRITTEN AUTHORIZATION OF PERQ SYSTEMS CORPORATION.

TITLE: NET STATUS

e43.dp

PERQ

DESIGNED	UCH		SIZE	CODE	IDENTIFICATION	VAR	REV
DRAWN	13 Sep 82 16:45:01	SBokse	A	11	0006 -	02	AN
UPDATED	APR/03/84	STECK	PROJ : ETHERNET IO BOARD W/ETHERNET Version B			PAGE 43 OF 56	

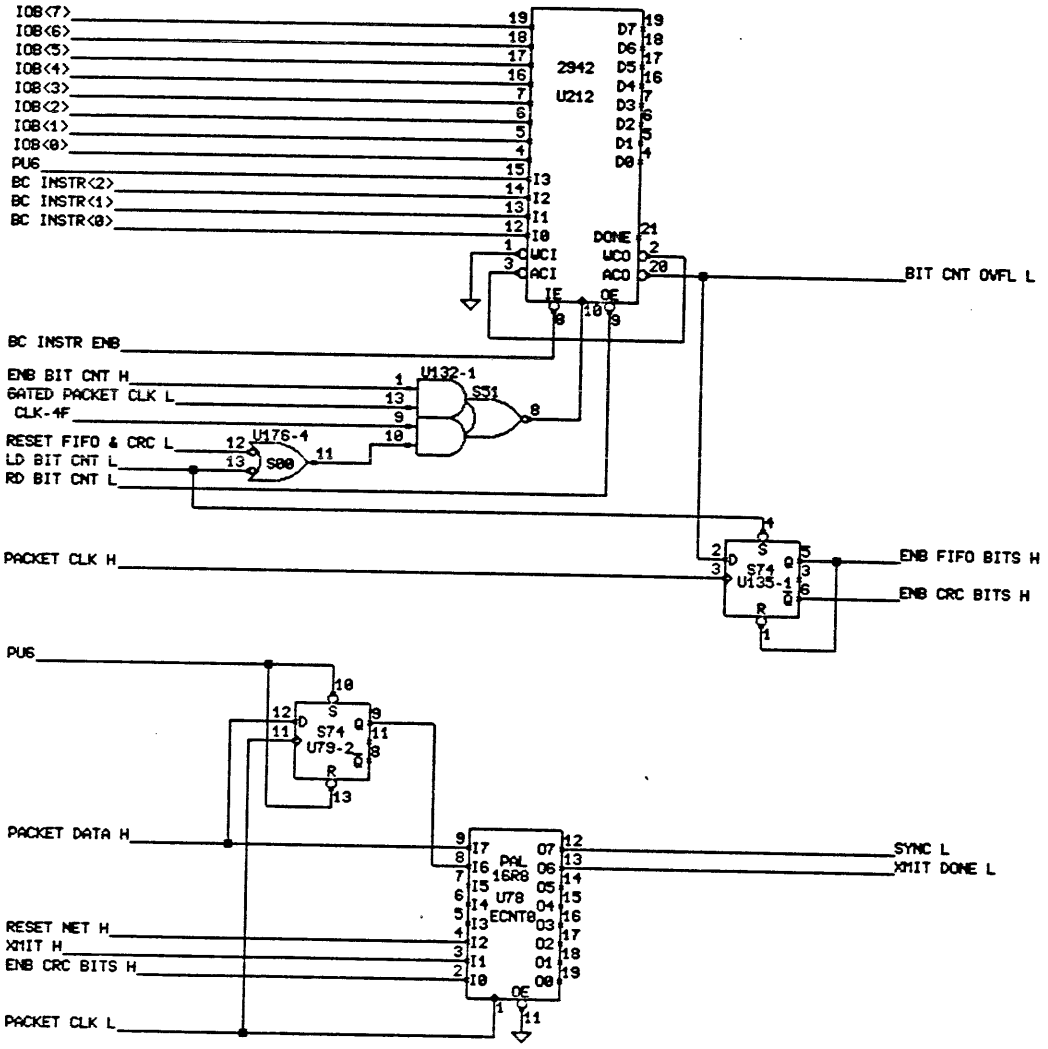

COPYRIGHT (c) 1984

THIS DOCUMENT IS NOT TO BE REPRODUCED IN ANY FORM OR TRANSMITTED IN WHOLE OR IN PART, WITHOUT PRIOR WRITTEN AUTHORIZATION OF PERQ SYSTEMS CORPORATION.

TITLE: NET BIT COUNTER

e44.db

PERQ

DESIGNED	UCH		
DRAWN	13 Sep 82 16:45:01	SBokse	
UPDATED	APR/03/84	STECK	

SIZE	CODE	IDENTIFICATION	VAR	REV
A	11	0006-	02	AN

PROJ : ETHERNET IO BOARD U/ETHERNET REV B

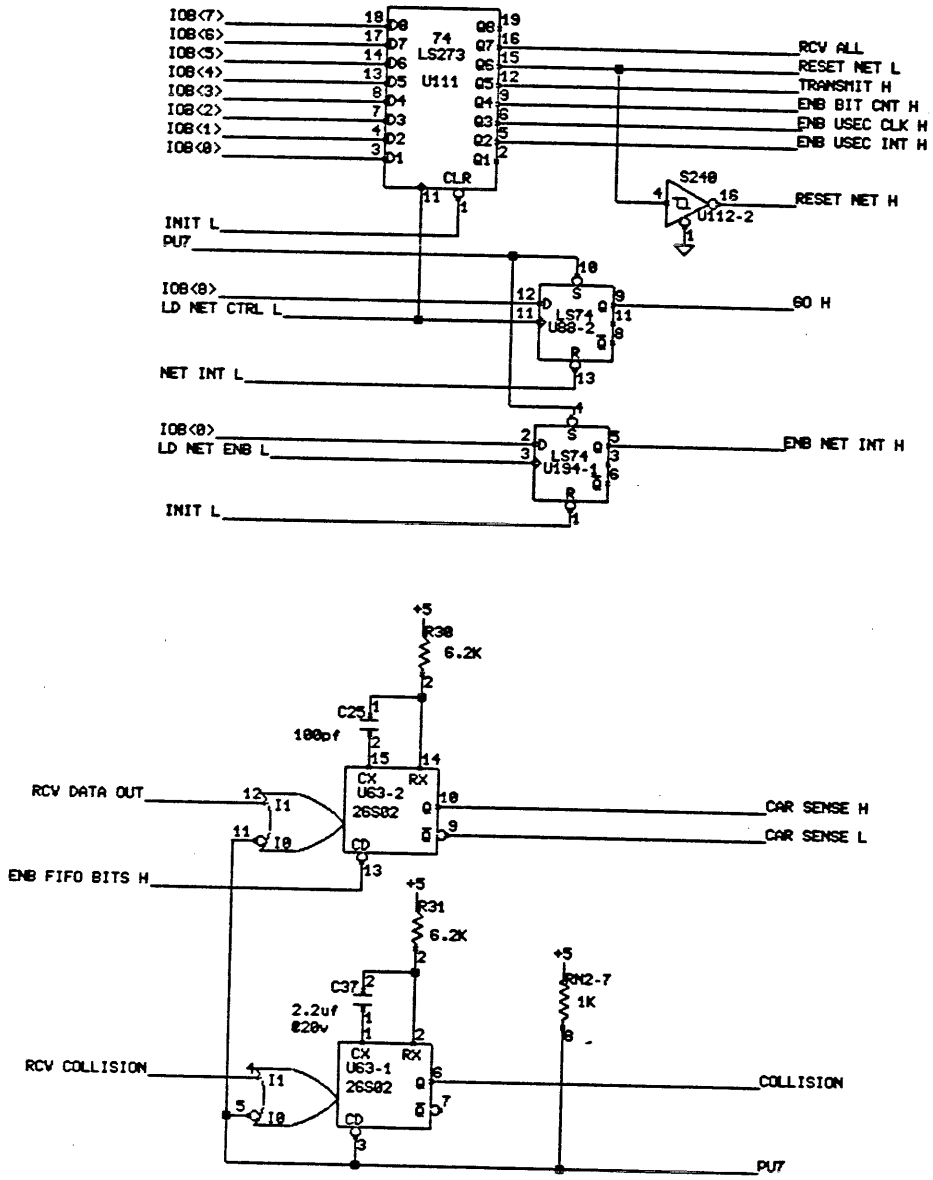

THIS DOCUMENT IS NOT TO BE REPRODUCED IN ANY FORM OR TRANSMITTED IN WHOLE OR IN PART, WITHOUT PRIOR WRITTEN AUTHORIZATION OF PERQ SYSTEMS CORPORATION.

COPYRIGHT (c) 1984

TITLE: PERQ CONTROL REGISTER

e15.db

PERQ

DESIGNED	WCH		
DRAWN	13 Sep 82 16:45:01	SBakse	
UPDATED	APR/03/84	STECK	

SIZE	CODE	IDENTIFICATION	VAR	REV
A	11	0006 -	02	AN

PROJ : ETHERNET IO BOARD W/ETHERNET Version B

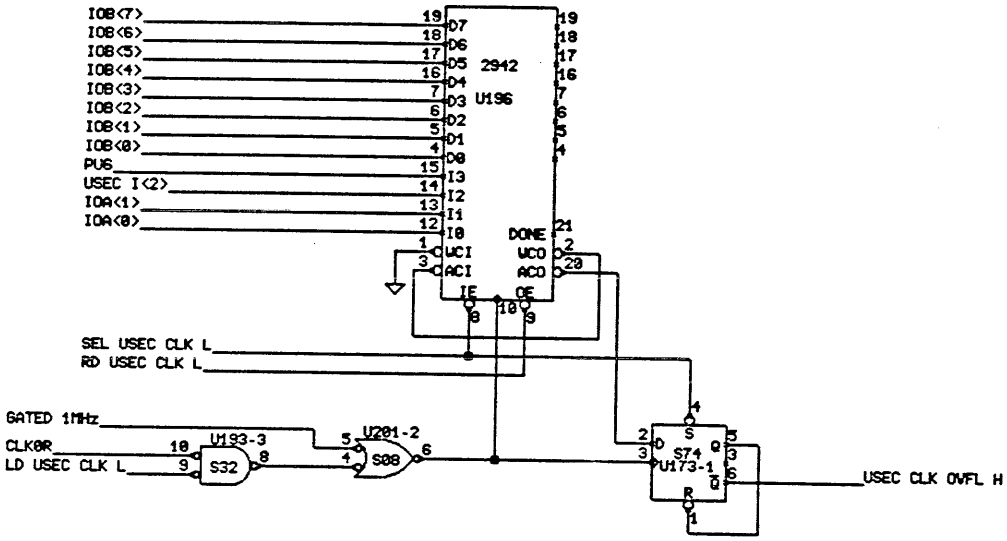

COPYRIGHT (c) 1984

THIS DOCUMENT IS NOT TO BE REPRODUCED IN ANY FORM OR TRANSMITTED IN WHOLE OR IN PART, WITHOUT PRIOR WRITTEN AUTHORIZATION OF PERQ SYSTEMS CORPORATION.

TITLE: MICROSECOND CLOCK

e16.db

PERQ

DESIGNED	WCH		
DRAWN	13 Sep 82 16:45:01	SBokse	
UPDATED	APR/03/84	STECK	

SIZE	CODE	IDENTIFICATION	VAR	REV
A	11	0006 -	02	AN

PROJ : ETHERNET IO BOARD W/ETHERNET Version B

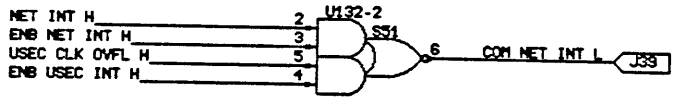

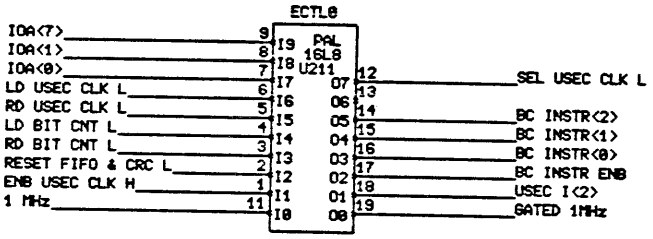

THIS DOCUMENT IS NOT TO BE REPRODUCED IN ANY FORM OR TRANSMITTED IN WHOLE OR IN PART, WITHOUT PRIOR WRITTEN AUTHORIZATION OF PERQ SYSTEMS CORPORATION.

COPYRIGHT (c) 1984

PERQ	DESIGNED	WCH		TITLE	NET CONTROLLER		e47.db	
	DRAWN	13 Sep 82 16:45:01	SBokse	SIZE	CODE	IDENTIFICATION	VAR	REV
	UPDATED	APR/03/84	STECK	A	11	0006 -	02	AN
				PROJ :	ETHERNET IO BOARD U/ETHERNET Version B		PAGE 47 OF 56	

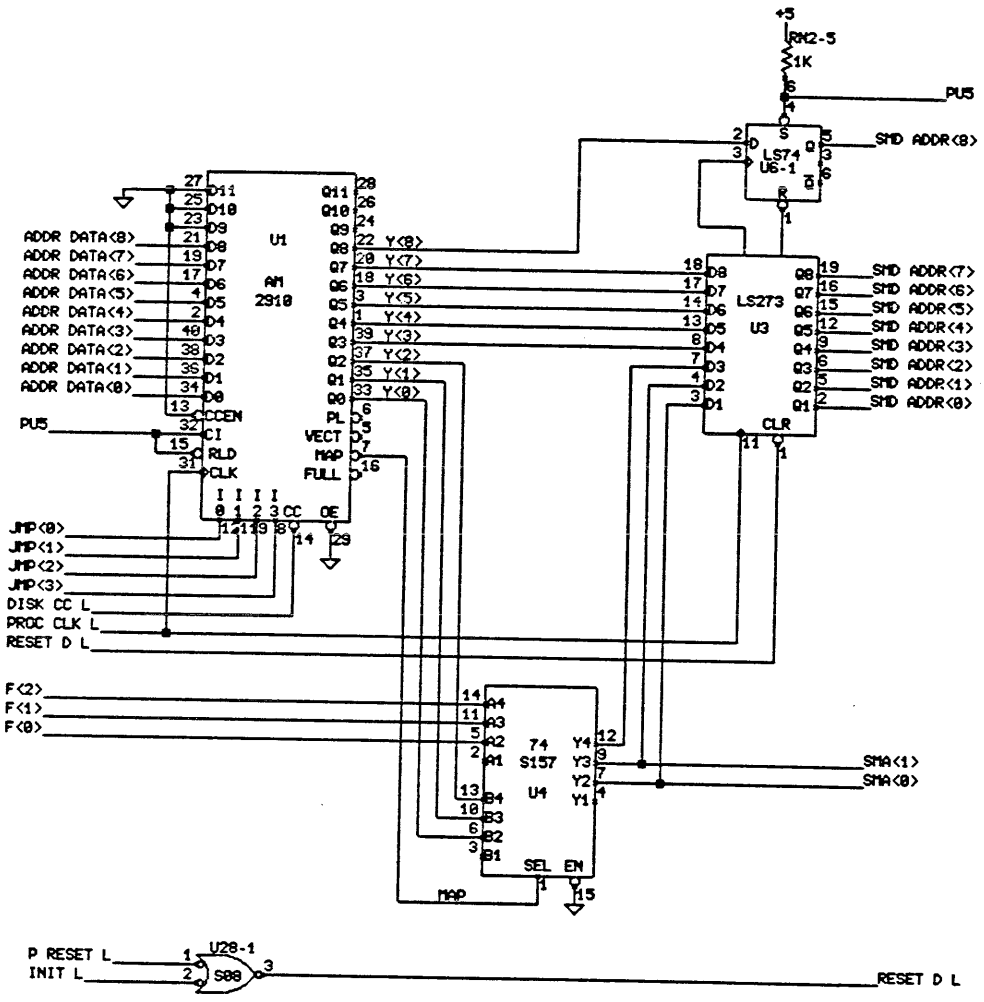

COPYRIGHT (c) 1984

THIS DOCUMENT IS NOT TO BE REPRODUCED IN ANY FORM OR TRANSMITTED IN WHOLE OR IN PART, WITHOUT PRIOR WRITTEN AUTHORIZATION OF PERQ SYSTEMS CORPORATION.

PERQ	TITLE: DISK STATE MACHINE					e48.dp	
	DESIGNED	UCH		SIZE	CODE	IDENTIFICATION	VAR	REV
	DRAWN	13 Sep 82 16:45:01	SBolkse	A	11	0006 -	02	AN
	UPDATED	APR/03/84	STECK	PROJ : ETHERNET IO BOARD W/ETHETNET Version B			PAGE 48 OF 56	

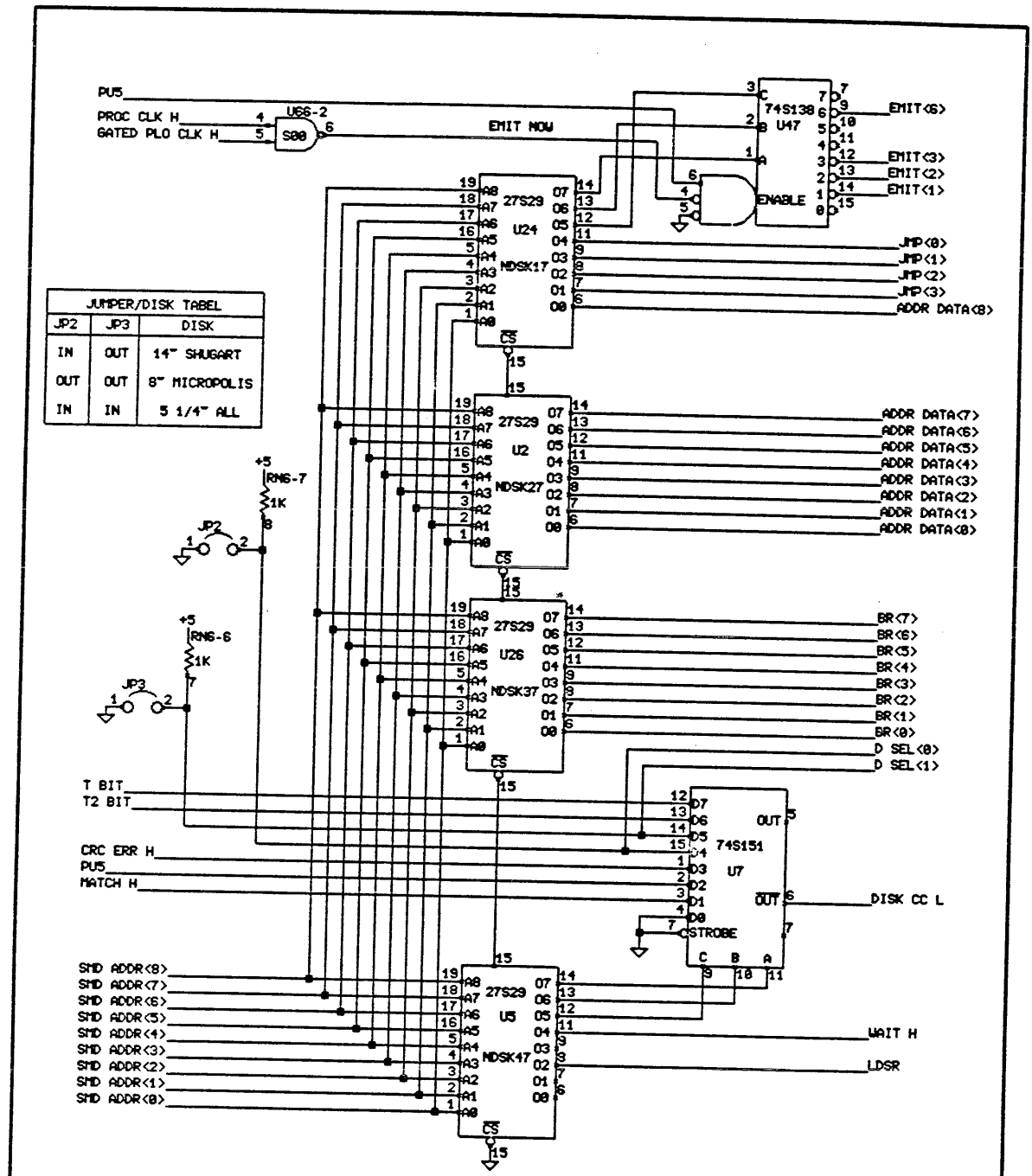

THIS DOCUMENT IS NOT TO BE REPRODUCED IN ANY FORM OR TRANSMITTED IN WHOLE OR IN PART, WITHOUT PRIOR WRITTEN AUTHORIZATION OF PERQ SYSTEMS CORPORATION.

COPYRIGHT (c) 1984

PERQ	TITLE	DISK STATE MACHINE				e49.db	
	DESIGNED	WCH		SIZE	CODE	IDENTIFICATION	VAR	REV
	DRAWN	13 Sep 82 16:45:01	SBokse	A	11	0006 -	02	AR
	UPDATED	JUNE/11/84	STECK	PROJ :	ETHERNET IO BOARD W/ETHERNET Version B		PAGE 49	OF 56

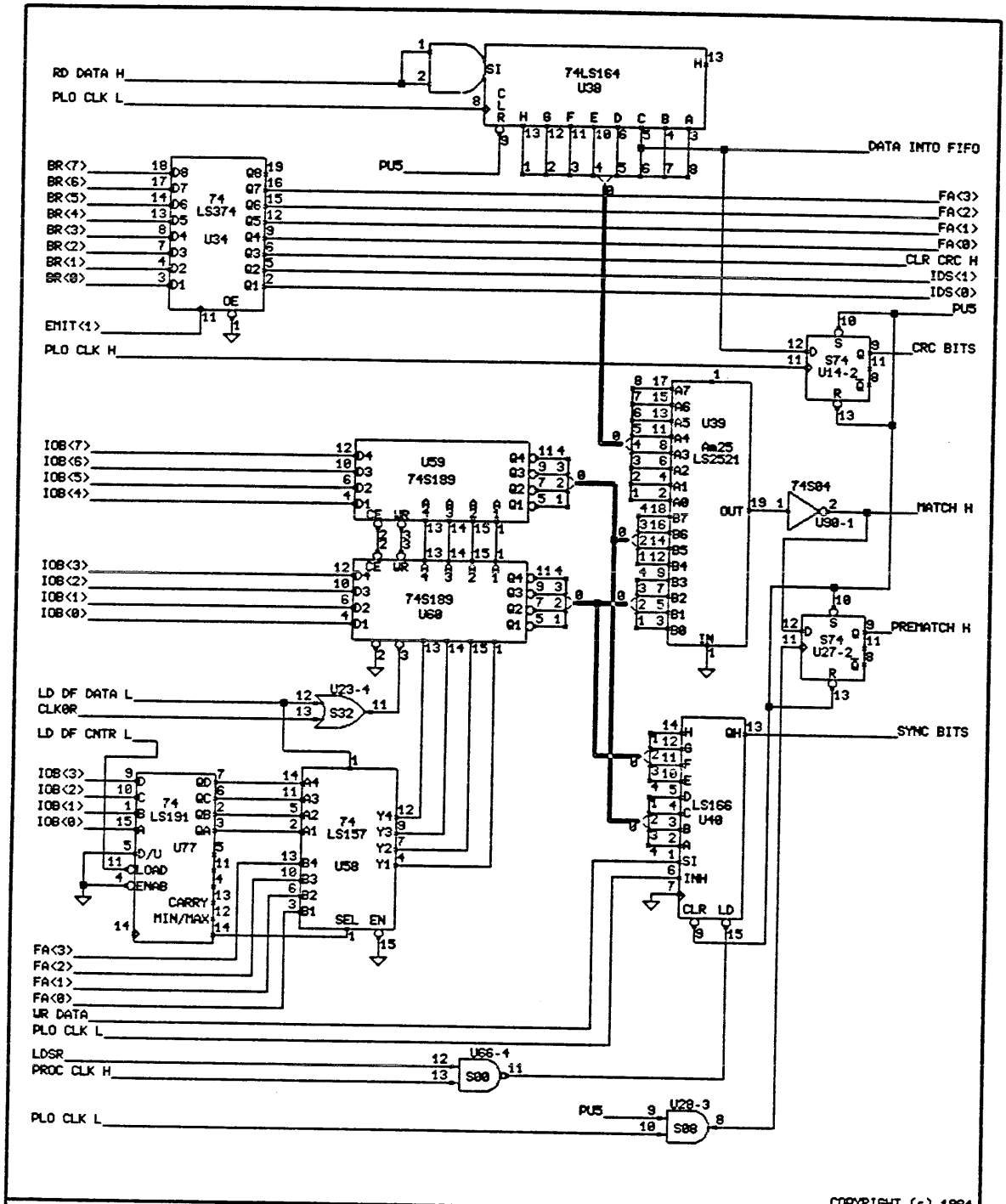

COPYRIGHT (c) 1984

THIS DOCUMENT IS NOT TO BE REPRODUCED IN ANY FORM OR TRANSMITTED IN WHOLE OR IN PART, WITHOUT PRIOR WRITTEN AUTHORIZATION OF PERQ SYSTEMS CORPORATION.

TITLE: DISK REGISTER FILE

e50.db

PERQ

DESIGNED	UCH		SIZE	CODE	IDENTIFICATION	VAR	REV
DRAWN	13 Sep 82 16:45:01	SBokse	A	11	0006-	02	AN
UPDATED	AUG/10/84	STECK	PROJ : ETHERNET IO BOARD W/ETHERNET Version B			PAGE 50 OF 56	

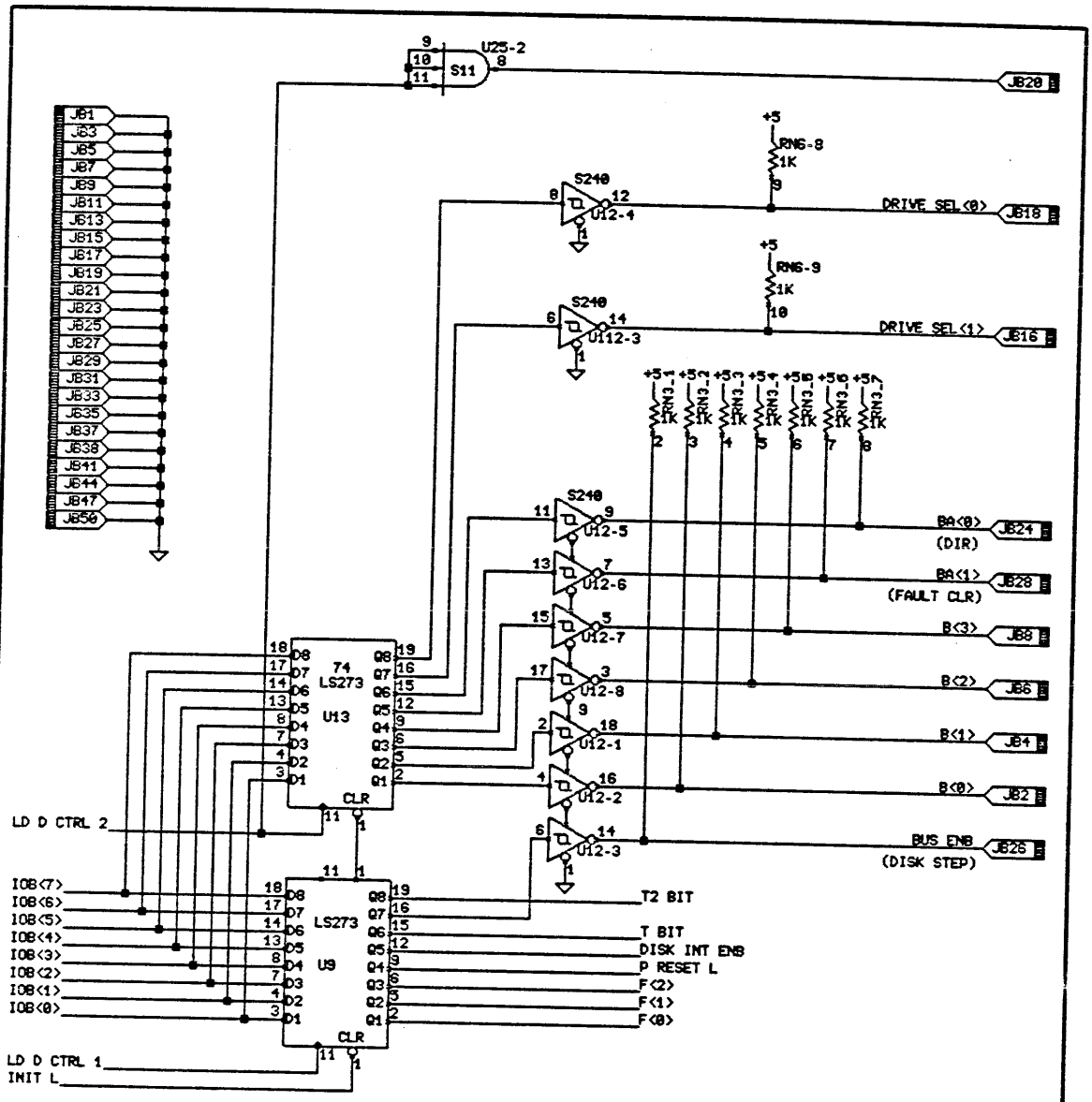

THIS DOCUMENT IS NOT TO BE REPRODUCED IN ANY FORM OR TRANSMITTED IN WHOLE OR IN PART, WITHOUT PRIOR WRITTEN AUTHORIZATION OF PERQ SYSTEMS CORPORATION.

COPYRIGHT (c) 1984

TITLE: DISK CONTROL REGISTERS

e51.db

PERQ

DESIGNED	WCH	
DRAWN	13 Sep 82 16:45:01	SBokse
UPDATED	APR/03/84	STECK

SIZE	CODE	IDENTIFICATION	VAR	REV
A	11	0006-	02	AN

PROJ : ETHERNET IO BOARD W/ETHERNET Version B

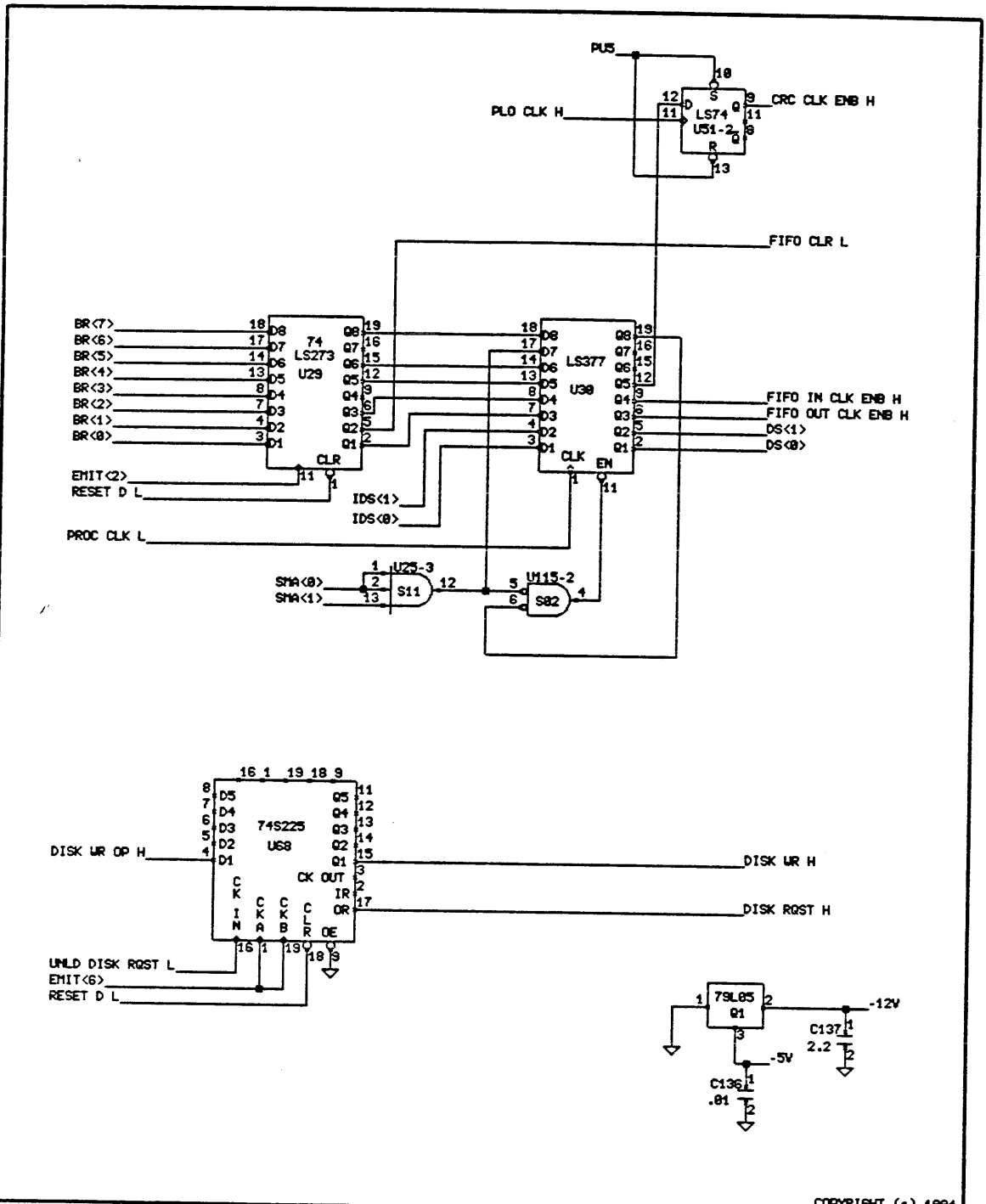

COPYRIGHT (c) 1984

THIS DOCUMENT IS NOT TO BE REPRODUCED IN ANY FORM OR TRANSMITTED IN WHOLE OR IN PART, WITHOUT PRIOR WRITTEN AUTHORIZATION OF PERQ SYSTEMS CORPORATION.

TITLE: DISK FIFO CONTROL

e52.db

PERQ

DESIGNED	UCH		SIZE	CODE	IDENTIFICATION	VAR	REV
DRAWN	13 Sep 82 16:45:01	SBokse	A	1 1	0 0 0 6 -	0 2	AN
UPDATED	APR/03/84	STECK	PROJ : ETHERNET IO BOARD W/ETHERNET Version B			PAGE 52	OF 56

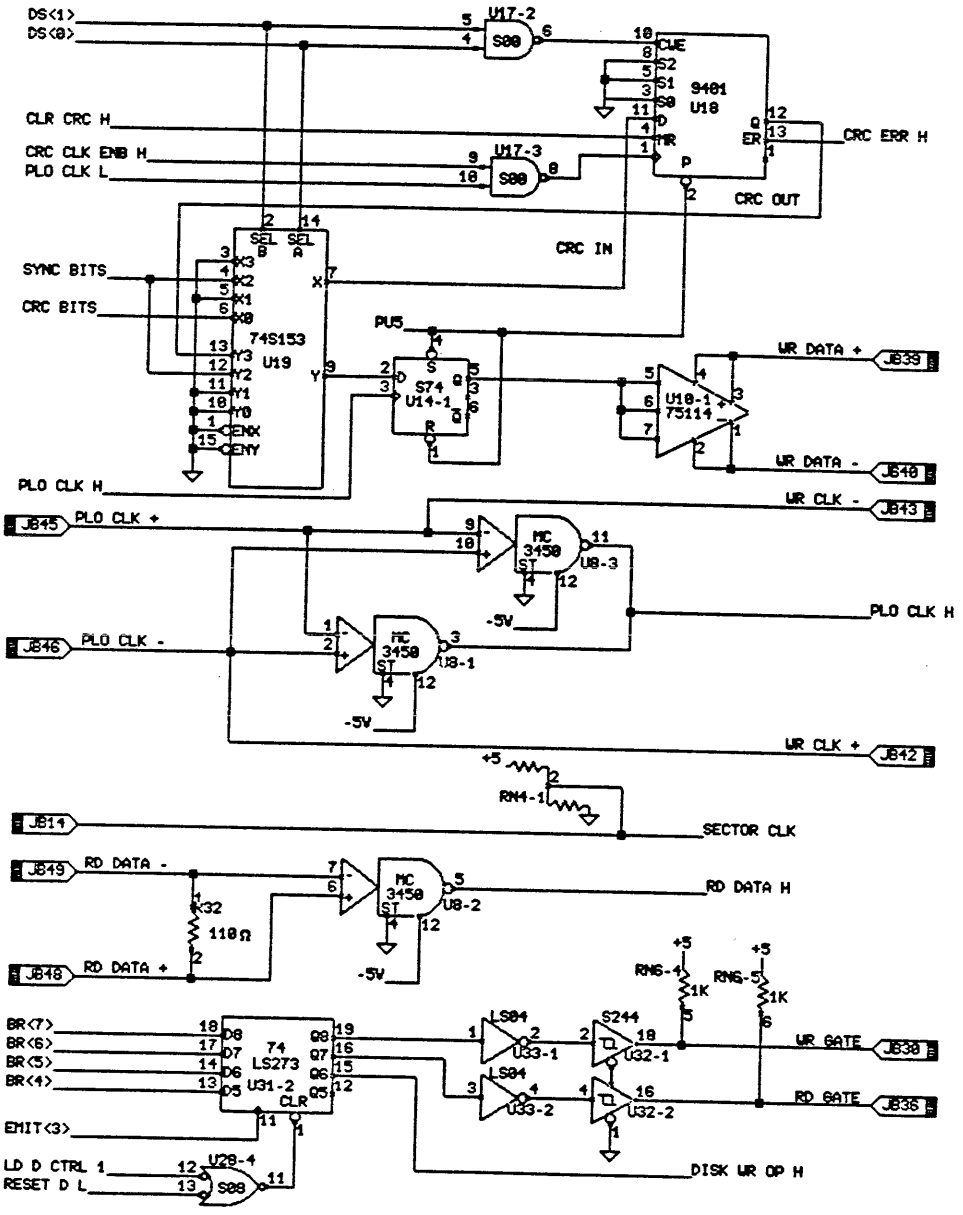

THIS DOCUMENT IS NOT TO BE REPRODUCED IN ANY FORM OR TRANSMITTED IN WHOLE OR IN PART, WITHOUT PRIOR WRITTEN AUTHORIZATION OF PERQ SYSTEMS CORPORATION.

COPYRIGHT (c) 1984

PERQ	TITLE: DISK INYERFACE					e53.db	
	DESIGNED	UCH		SIZE	CODE	IDENTIFICATION	VAR / REV
	DRAWN	13 Sep 82 16:45:01	SBokse	A	1 1	0 0 0 6 -	0 2 / AN
	UPDATED	APR/03/84	STECK	PROJ : ETHERNET IO BOARD W/ETHERNET Version B			PAGE 53 OF 56

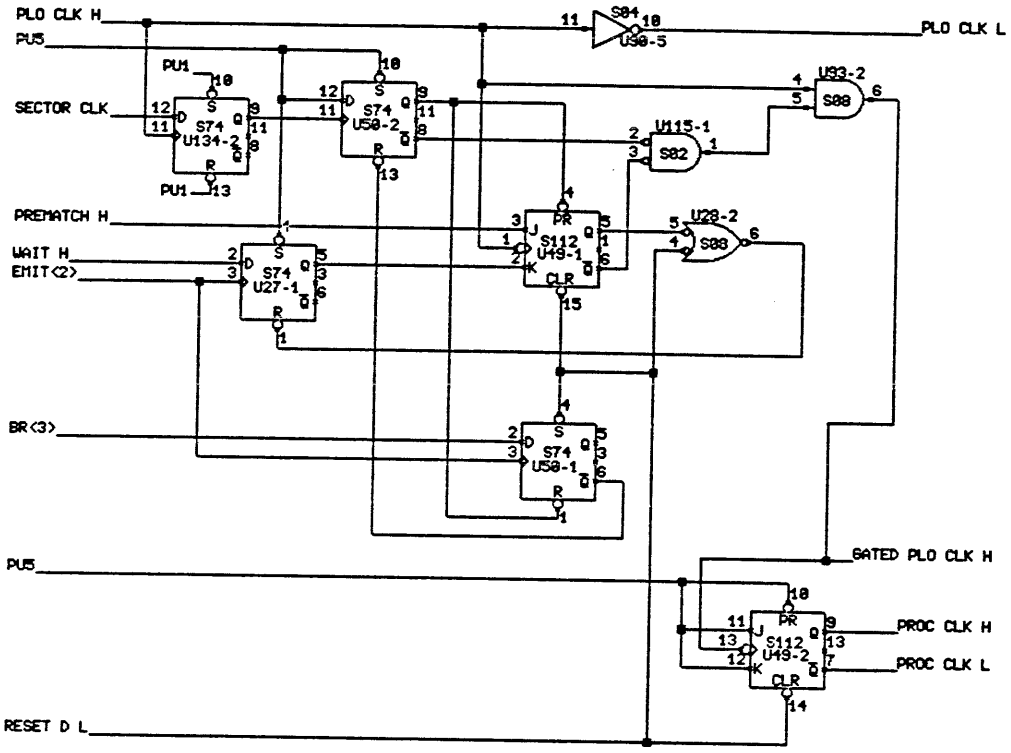

THIS DOCUMENT IS NOT TO BE REPRODUCED IN ANY FORM OR TRANSMITTED IN WHOLE OR IN PART, WITHOUT PRIOR WRITTEN AUTHORIZATION OF PERQ SYSTEMS CORPORATION.

COPYRIGHT (c) 1984

TITLE: DISK CLOCK

e54.db

PERQ

DESIGNED	WCH		
DRAWN	13 Sep 82 16:45:01	SBokse	
UPDATED	APR/03/84	STECK	

SIZE	CODE	IDENTIFICATION	VAR	REV
A	11	0006-	02	AN

PROJ : ETHERNET IO BOARD W/ETHERNET Version B

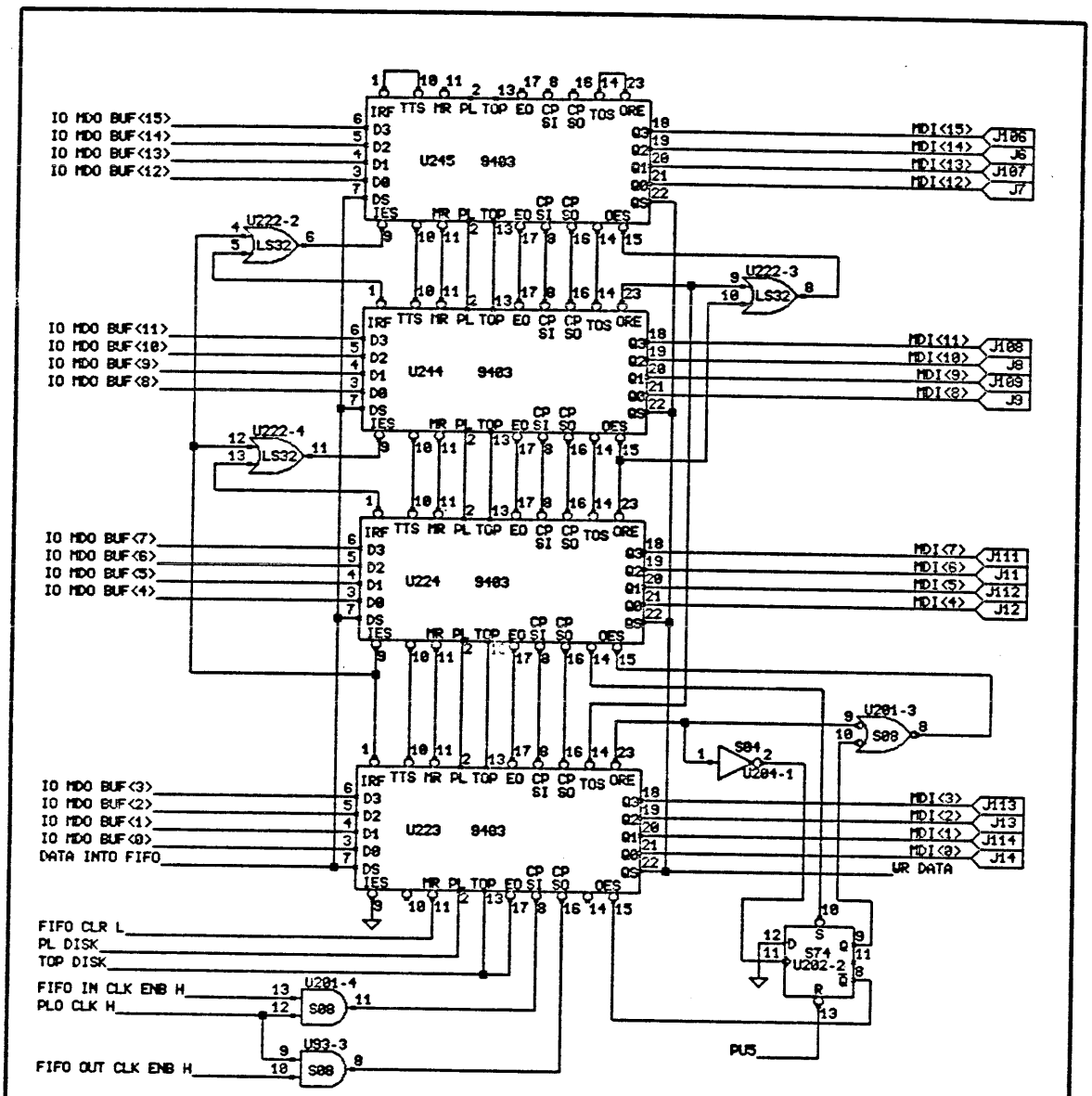

COPYRIGHT (c) 1984

THIS DOCUMENT IS NOT TO BE REPRODUCED IN ANY FORM OR TRANSMITTED IN WHOLE OR IN PART, WITHOUT PRIOR WRITTEN AUTHORIZATION OF PERQ SYSTEMS CORPORATION.

TITLE: DISK DATA BUFFERS

e55.do

PERQ

DESIGNED	UCH		SIZE	CODE	IDENTIFICATION	VAR	REV
DRAWN	13 Sep 82 16:45:01	SBolse	A	11	0006-	02	AN
UPDATED	APR/03/84	STECK	PROJ : ETHERNET IO BOARD U/ETHERNET Version B			PAGE 55	OF 56

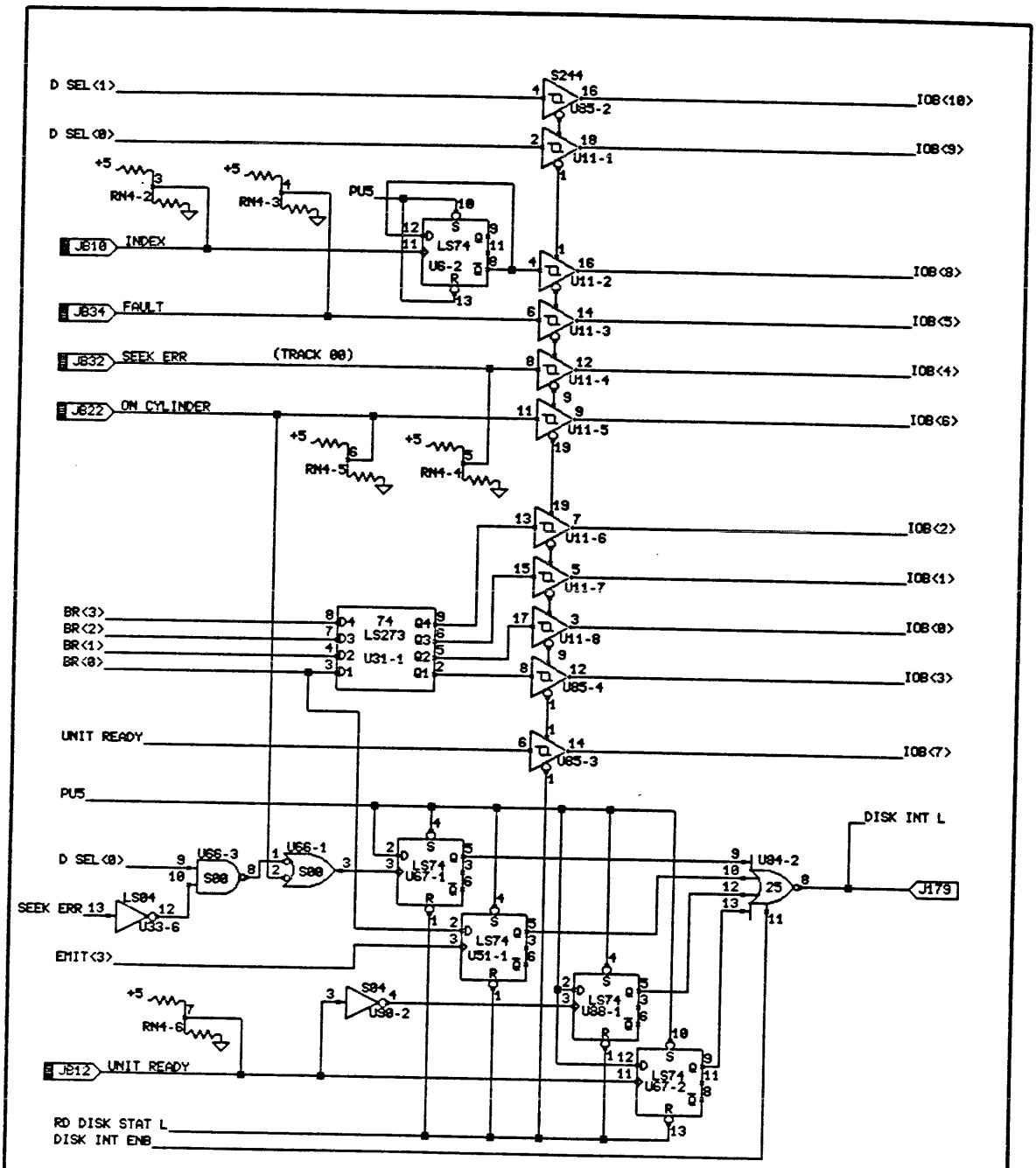

THIS DOCUMENT IS NOT TO BE REPRODUCED IN ANY FORM OR TRANSMITTED IN WHOLE OR IN PART, WITHOUT PRIOR WRITTEN AUTHORIZATION OF PERQ SYSTEMS CORPORATION.

COPYRIGHT (c) 1984

TITLE: DISK STATUS

e56.db

PERQ

DESIGNED	WCH		
DRAWN	13 Sep 82 16:45:01	SBokse	
UPDATED	APR/03/84	STECK	

SIZE	CODE	IDENTIFICATION	VAR	REV
A	11	0006-	02	AN

PROJ : ETHERNET IO BOARD U/ETHERNET Version B

Part/Page Cross Reference 18 Jan 85 17:10:36

Using Files: E01.WL to E56.WL

PART..TYPE.....Pages Numbers

U1....2910.....48
U2....27S29.....49
U3....74LS273.....48
U4....74S157.....48
U5....27S29.....49
U6....74LS74.....56 48
U7....74S151.....49
U8....MC3450.....53 53 53
U9....74LS273.....51
U10...75114.....53
U11...74S244/1.....56 56 56 56 56 56 56 56
U12...74S240/1.....51 51 51 51 51 51 51 51
U13...74LS273.....51
U14...74S74.....53 50
U15...74S240/1.....18 18 18 18 18 18 18 18
U16...74S240/1.....18 18 18 18 18 18 18
U17...74S00.....53 53 6
U18...9401.....53
U19...74S153.....53
U21...74LS175.....18
U22...74LS153.....18
U23...74S32.....50 27 21 3
U24...27S29.....49
U25...74S11.....52 51 4
U26...27S29.....49
U27...74S74.....54 50
U28...74S08.....54 53 50 48
U29...74LS273.....52
U30...74LS377.....52
U31...74LS273/H.....56 53
U32...74S244/1.....53 53 33 33 33 33 12 12
U33...74LS04.....56 53 53 18 14 1
U34...74LS374.....50
U35...2910.....29
U36...27S29.....30
U37...74S273.....29
U38...74LS164.....50
U39...25LS2521.....50
U40...74LS166.....50
U42...74S04.....41 41
U44...74LS138.....27
U45...COM14/1.....21 21 21 21 21 21 21 21 21 21 21
U46...74LS244/1.....21 21 21 21 19 12 12
U47...74S138.....49
U48...74S225..... 9

U49...74S112.....54 54
U50...74S74.....54 54
U51...74LS74.....56 52
U52...74S189.....34
U53...74S189.....34
U54...25LS2521.....37
U55...74S244/4.....33 33
U56...27S29.....30
U57...74S244/4.....33 1
U58...74LS157.....50
U59...74S189.....50
U60...74S189.....50
U62...MSM5832.....21
U63...26S02.....45 45
U64...74S225..... 9
U65...74LS373..... 9
U66...74S00.....56 56 50 49
U67...74LS74.....56 56
U68...74S225.....52
U69...74S374.....32
U70...74S251.....32
U71...74S374.....43
U72...74LS174.....43
U73...74S251.....32
U74...74S74.....43 29
U75...27S29.....30
U76...74S86.....39 38 37 1
U77...74LS191.....50
U78...PAL16R8.....44
U79...74S74.....44 42
U80...74LS273.....21
U81...74LS138.....27
U82...74LS04.....27 14 14 7
U83...74LS00.....27 9 7 7
U84...7425.....56
U85...74S244/1.....56 56 56 9 9
U86...9216.....19
U87...74LS158.....34
U88...74LS74.....56 45
U89...VF150.....25
U90...74S04.....56 54 50 25
U91...74S51.....41 41
U92...74S138.....31
U93...74S08.....55 54 42 42
U94...74S240/1.....41 41 38 38 32 31 31 31
U95...74S157.....42
U96...TTLDL050.....41
U99...2167.....23
U100..2167.....23
U101..2167.....23
U102..2167.....23
U103..2167.....23

U104..2167.....23
U105..2167.....23
U106..2167.....23
U107..74LS373.....14
U108..74S163.....25
U109..27S29..... 3
U110..74S374..... 3
U111..74LS273.....45
U112..74S240/1.....51 45 43 43 38 36 15 15
U113..74S112.....41 37
U114..74S139.....31 3
U115..74S02.....54 52 38 5
U116..PAL16R8.....38
U117..PAL16R8.....38
U118..74LS74..... 7 7
U119..74LS174.....43
U120..9403.....37
U121..9403.....37
U122..2764.....26
U123..74LS161..... 7
U124..74LS74.....13 9
U125..PAL16L8.....26
U126..9519.....13
U127..8237.....14
U128..74S02.....18 9 7 3
U129..74LS175.....24
U130..74LS32.....37 34 12 12
U131..74LS04.....19 19 18 18 13 7
U132..74S51.....47 44
U133..74LS139.....27 7
U134..74S74.....54 41
U135..74S74.....44 39
U136..74S51.....39 39
U137..PAL16R8.....38
U138..PAL16R8.....38
U139..74S225.....11
U140..74S225.....11
U141..74S225.....11
U142..74S225.....11
U143..74LS153.....15
U144..Z80CPU.....12
U145..UPD765.....18
U146..74LS158..... 7
U147..9914.....17
U148..PAL16R8..... 4
U149..85S68..... 4
U150..PAL16L8..... 4
U151..74S112.....25 25
U152..74S225..... 8
U153..74S225.....35
U154..74S225.....35
U155..74S225.....35

```
U156..74S225.....35
U157..Z80SIO.....16
U158..Z80SIO.....15
U159..8254.......15
U160..8254.......16
U161..74S244/1.....24 15 12 12  8  8
U162..74S10..... 8  7  6
U163..74S151..... 4
U164..74S158..... 4
U165..74LS175..... 4
U166..74S32..... 5  3  3  3
U167..74S225..... 8
U168..74LS373.....22
U169..74S225.....36
U170..74S225.....10
U171..74S225.....10
U172..74LS08.....15 15  7  7
U173..74S74.....46  1
U174..74259.....27
U175..74LS166.....25
U176..74S00.....44 41  6  5
U177..74S225.....36
U178..74S175..... 3
U179..74S158..... 4
U180..74LS175..... 3
U181..74S138..... 3
U182..74S225.....36
U183..74S225.....36
U184..74S225.....36
U185..74S225.....10
U186..74S225.....10
U187..MC3417.....20
U188..75189.....15
U189..75188.....16
U190..75189.....15
U191..74S08.....37  5  5  2
U192..74LS32.....16 15
U193..74S32.....46 16 15  5
U194..74LS74.....45  7
U195..74LS378..... 2
U196..2942.....46
U197..7643..... 2
U198..74S112.....41 39
U199..74LS174..... 2
U200..74S138..... 3
U201..74S08.....55 55 46  3
U202..74S74.....55 41
U203..74S138..... 3
U204..74S04.....55 24 24  3  3  3
U205..75189.....16
U206..NE527.....40
U207..75188.....15
```

U208..74S138.....28
U209..74S138.....28
U210..74LS161.....25
U211..PAL16L8.....47
U212..2942.....44
U213..74LS151..... 2
U214..PAL16L8..... 6
U215..74S74.....41 5
U216..74S288..... 5
U217..85S68..... 5
U218..85S68..... 5
U219..85S68..... 6
U220..85S68..... 6
U221..85S68..... 6
U222..74LS32.....55 55 55
U223..9403.....55
U224..9403.....55
U225..2912.....20
U226..NE527.....40
U227..LM380.....20
U228..74S04.....25 24 6 5 3
U229..10101.....39
U230..PAL12L10.....28
U231..74LS245.....22
U232..74LS245.....22
U233..74S138.....28
U234..PAL16L8..... 6
U235..PAL16L8..... 6
U236..PAL16L8..... 5
U237..75162.....17
U238..75160.....17
U239..74S244..... 5
U240..74S244/4..... 6 6
U241..74S244..... 6
U242..74S374.....22
U243..74S374.....22
U244..9403.....55
U245..9403.....55
B1....BATTERY.....21
C25...CAP.....45
C35...TRIMCAP.....21
C36...CAP.....21
C37...CAP.....45
C103..CAP.....15
C121..CAP.....20
C124..CAP.....20
C125..CAP.....20
C126..CAP.....20
C135..CAP.....20
C136..CAP.....52
C137..CAP.....52
C139..CAP.....20

C140..CAP.....40
C153..CAP.....20
C154..CAP.....40
C155..CAP.....40
C156..CAP.....40
C157..CAP.....40
C158..CAP.....40
C159..CAP.....20
D1....DIODE.....21
D2....DIODE.....21
Q1....79L05.....52
R1....RES..... 2
R2....RES..... 2
R3....RES+5.....12
R4....RES+5.....15
R5....RES.....15
R6....RES.....20
R7....RES.....20
R8....RES.....20
R9....RES.....20
R10...RES.....20
R11...RES.....20
R12...RES.....20
R13...RES.....20
R16...RES+5.....39
R17...RES.....39
R18...RES.....39
R19...RES.....39
R20...RES.....39
R21...RES.....40
R22...RES.....40
R23...RES.....40
R24...RES.....40
R25...RES.....40
R26...RES+5.....40
R27...RES.....40
R28...RES.....40
R29...RES.....40
R30...RES+5.....45
R31...RES+5.....45
R32...RES.....53
R33...RES.....39
R34...RES.....39
R35...RES.....21
RN1...COM10/1.....16 16 16 15 14 14 14 13 13
RN2...COM10/1.....48 45 41 25 13 7 2
RN3...COM10/1.....51 51 51 51 51 51 51
RN4...TERM10/1.....56 56 56 56 56 53
RN5...COM10/1.....19 18 18 18 18 18 18
RN6...COM10/1.....53 53 51 51 49 49 18 18 18
RN8...COM10/1.....16 12 12 12 12 12 12 12 12
RN9...12COM10/1.....16 16 15 15 15 15

RN10..COM10/1.....12 12 12 12 12 12 12 12
X2....XTAL.....21
J2....EDGE.....40
J4....EDGE..... 3
J6....EDGE.....55
J7....EDGE.....55
J8....EDGE.....55
J9....EDGE.....55
J11...EDGE.....55
J12...EDGE.....55
J13...EDGE.....55
J14...EDGE.....55
J16...EDGE.....22
J17...EDGE.....22
J18...EDGE.....22
J19...EDGE.....22
J21...EDGE.....22
J22...EDGE.....22
J23...EDGE.....22
J24...EDGE.....22
J26...EDGE..... 6
J27...EDGE..... 6
J28...EDGE..... 6
J29...EDGE..... 6
J31...EDGE..... 6
J32...EDGE..... 6
J33...EDGE..... 5
J34...EDGE..... 5
J36...EDGE..... 5
J37...EDGE..... 3
J38...EDGE.....17
J39...EDGE.....47
J41...EDGE.....17
J42...EDGE.....17
J43...EDGE.....17
J44...EDGE.....17
J46...EDGE.....17
J47...EDGE.....17
J48...EDGE.....17
J53...EDGE..... 8
J54...EDGE..... 5
J56...EDGE.....22
J57...EDGE.....22
J58...EDGE.....22
J59...EDGE.....22
J61...EDGE.....22
J62...EDGE.....22
J63...EDGE.....22
J64...EDGE.....22
J66...EDGE.....28
J67...EDGE.....28
J68...EDGE.....28

J69...EDGE.....28
J71...EDGE.....28
J72...EDGE.....24
J73...EDGE..... 3
J74...EDGE..... 3
J78...EDGE.....39
J79...EDGE.....39
J81...EDGE.....20
J82...EDGE.....15
J83...EDGE.....15
J84...EDGE.....15
J86...EDGE.....15
J87...EDGE.....15
J88...EDGE.....16
J89...EDGE.....40
J91...EDGE.....40
J92...EDGE.....15
J93...EDGE.....15
J94...EDGE.....15
J96...EDGE.....40
J99...EDGE.....40
J103..EDGE..... 2
J104..EDGE..... 3
J106..EDGE.....55
J107..EDGE.....55
J108..EDGE.....55
J109..EDGE.....55
J111..EDGE.....55
J112..EDGE.....55
J113..EDGE.....55
J114..EDGE.....55
J116..EDGE.....22
J117..EDGE.....22
J118..EDGE.....22
J119..EDGE.....22
J121..EDGE.....22
J122..EDGE.....22
J123..EDGE.....22
J124..EDGE.....22
J126..EDGE..... 6
J127..EDGE..... 6
J128..EDGE..... 6
J129..EDGE..... 6
J131..EDGE..... 6
J132..EDGE..... 6
J133..EDGE..... 5
J134..EDGE..... 5
J136..EDGE..... 5
J137..EDGE..... 3
J138..EDGE.....17
J139..EDGE.....17
J141..EDGE.....17

J142..EDGE.....17
J143..EDGE.....17
J144..EDGE.....17
J146..EDGE.....17
J147..EDGE.....17
J148..EDGE..... 5
J153..EDGE..... 2
J154..EDGE..... 2
J156..EDGE.....22
J157..EDGE.....22
J158..EDGE.....22
J159..EDGE.....22
J161..EDGE.....22
J162..EDGE.....22
J163..EDGE.....22
J164..EDGE.....22
J166..EDGE.....28
J167..EDGE.....28
J168..EDGE.....28
J169..EDGE.....28
J171..EDGE..... 2
J172..EDGE..... 9
J173..EDGE..... 2
J174..EDGE..... 2
J176..EDGE.....24
J178..EDGE..... 2
J179..EDGE.....56
J181..EDGE.....15
J182..EDGE.....15
J183..EDGE.....15
J184..EDGE.....15
J186..EDGE.....15
J187..EDGE.....16
J188..EDGE.....16
J189..EDGE.....16
J191..EDGE.....16
J192..EDGE.....16
J193..EDGE.....16
J194..EDGE.....40
J196..EDGE.....16
J197..EDGE.....16
JA1...CABLE.....19
JA2...CABLE.....19
JA3...CABLE.....19
JA5...CABLE.....19
JA7...CABLE.....19
JA9...CABLE.....19
JA10..CABLE.....19
JA11..CABLE.....19
JA13..CABLE.....19
JA14..CABLE.....19
JA15..CABLE.....19

JA17..CABLE.....19
JA18..CABLE.....19
JA19..CABLE.....19
JA20..CABLE.....19
JA21..CABLE.....19
JA22..CABLE.....19
JA23..CABLE.....19
JA25..CABLE.....19
JA26..CABLE.....19
JA27..CABLE.....19
JA29..CABLE.....19
JA31..CABLE.....19
JA33..CABLE.....19
JA34..CABLE.....19
JA35..CABLE.....19
JA36..CABLE.....19
JA37..CABLE.....19
JA38..CABLE.....19
JA39..CABLE.....19
JA40..CABLE.....19
JA41..CABLE.....19
JA42..CABLE.....19
JA43..CABLE.....19
JA44..CABLE.....19
JA45..CABLE.....19
JA46..CABLE.....19
JA47..CABLE.....19
JA49..CABLE.....19
JB1...CABLE.....51
JB2...CABLE.....51
JB3...CABLE.....51
JB4...CABLE.....51
JB5...CABLE.....51
JB6...CABLE.....51
JB7...CABLE.....51
JB8...CABLE.....51
JB9...CABLE.....51
JB10..CABLE.....56
JB11..CABLE.....51
JB12..CABLE.....56
JB13..CABLE.....51
JB14..CABLE.....53
JB15..CABLE.....51
JB16..CABLE.....51
JB17..CABLE.....51
JB18..CABLE.....51
JB19..CABLE.....51
JB20..CABLE.....51
JE21..CABLE.....51
JB22..CABLE.....56
JB23..CABLE.....51
JB24..CABLE.....51

JB25..CABLE.....51
JB26..CABLE.....51
JB27..CABLE.....51
JB28..CABLE.....51
JB29..CABLE.....51
JB30..CABLE.....53
JB31..CABLE.....51
JB32..CABLE.....56
JB33..CABLE.....51
JB34..CABLE.....56
JB35..CABLE.....51
JB36..CABLE.....53
JB37..CABLE.....51
JB38..CABLE.....51
JB39..CABLE.....53
JB40..CABLE.....53
JB41..CABLE.....51
JB42..CABLE.....53
JB43..CABLE.....53
JB44..CABLE.....51
JB45..CABLE.....53
JB46..CABLE.....53
JB47..CABLE.....51
JB48..CABLE.....53
JB49..CABLE.....53
JB50..CABLE.....51
JP2...JUMPER.....49
JP3...JUMPER.....49

Signal/Page Cross Reference 18 Jan 85 17:10:36

Using Files: E01.WL to E56.WL

SIGNAL NAME.....Pages Numbers

+12V.....40 20 16 15
+5V.....39 26 21 20 15
-12V.....52 40 16 15
-5V.....53 52 20
1 MHz.....47 25
10 MHz H.....42 39 37 25
10 MHz L.....42 39 25
2 MHz.....25 20
20 MHz.....39 25
4 MHz.....25 18 12
40 MHz.....25
8 MHz.....25 19 18
A<0>.....27 26 23 18 17 16 15 13 12
A<10>.....26 23 14 12
A<11>.....26 23 14 12
A<12>.....26 23 14 12
A<13>.....26 23 14 12
A<14>.....26 14 12
A<15>.....26 14 12
A<1>.....27 26 23 17 16 15 12
A<2>.....27 26 23 17 12
A<3>.....27 26 23 12
A<4>.....27 26 23 14 12
A<5>.....27 26 23 14 12
A<6>.....27 26 23 14 12
A<7>.....27 26 23 14 12
A<8>.....26 23 14 12
A<9>.....26 23 14 12
AD15..... 1
ADDR DATA<0>.....49 48
ADDR DATA<1>.....49 48
ADDR DATA<2>.....49 48
ADDR DATA<3>.....49 48
ADDR DATA<4>.....49 48
ADDR DATA<5>.....49 48
ADDR DATA<6>.....49 48
ADDR DATA<7>.....49 48
ADDR DATA<8>.....49 48
ADDR<0>..... 6 5 4
ADDR<1>..... 6 5 4
ADDR<2>..... 6 5 4
ADDR<3>..... 6 5 4
B<0>.....51
B<1>.....51
B<2>.....51

B<3>.....51
BA<0>.....51
BA<1>.....51
BC INSTR ENB.....47 44
BC INSTR<0>.....47 44
BC INSTR<1>.....47 44
BC INSTR<2>.....47 44
BIT CNT OVFL L.....44
BR<0>.....56 52 50 49
BR<1>.....56 52 50 49
BR<2>.....56 52 50 49
BR<3>.....56 54 52 50 49
BR<4>.....53 52 50 49
BR<5>.....53 52 50 49
BR<6>.....53 52 50 49
BR<7>.....53 52 50 49
BUF D<0>.....22 10 8
BUF D<1>.....22 10 8
BUF D<2>.....22 10 8
BUF D<3>.....22 10 8
BUF D<4>.....22 10 8
BUF D<5>.....22 10 8
BUF D<6>.....22 10 8
BUF D<7>.....22 10 8
BUS ACK L.....26 15 14 12
BUS CTRL..... 7
BUS ENB.....51
BUS RQST L.....14 12
BUSY..... 1
C/P ENB H..... 6 5
CAR SENSE H.....45 43 32
CAR SENSE L.....45 41
CC L.....32 29
CC SEL<0>.....32 30
CC SEL<1>.....32 30
CC SEL<2>.....32 30
CC SEL<3>.....32 30
CLK IN H.....11 7
CLK IN L.....11 7
CLK OUT H.....10 7
CLK OUT L.....10 7
CLK-4F.....44 36 35 31 24 11 9 5
CLK-7R.....24
CLKOR.....50 46 43 34 32 29 28 24 22
CLKORB.....24 6 5 4 3 2
CLR CRC H.....53 50
CO<1>..... 6 5
CO<2>..... 6
COLLISION.....45 32
COLLISION+.....40
COLLISION-.....40
COM NET INT L.....47

```
CRC BIT H.............38
CRC BIT L.............39 38
CRC BITS..............53 50
CRC CLK ENB H.........53 52
CRC ERR H.............53 49
CRC ERR<2>............38
CRC ERR<3>............38
CRC ERR<4>............38
CRC ERROR.............38 32
D GRANT H.............. 3  2
D MEM RD L............26 14
D MEM WR L............26 14
D SEL<0>..............56 49
D SEL<1>..............56 49
D<0>..................27 26 23 22 21 18 17 16 15 14 13 12 11  9
D<1>..................26 23 22 21 18 17 16 15 14 13 12 11  9
D<2>..................26 23 22 21 18 17 16 15 14 13 12 11  9
D<3>..................26 23 22 21 18 17 16 15 14 13 12 11  9
D<4>..................26 23 22 21 18 17 16 15 14 13 12 11  9
D<5>..................26 23 22 21 18 17 16 15 14 13 12 11  9
D<6>..................26 23 22 21 18 17 16 15 14 13 12 11  9
D<7>..................26 23 22 18 17 16 15 14 13 12 11  9
DA<0>.................14 12
DA<1>.................14 12
DA<2>.................14 12
DA<3>.................14 12
DATA INTO FIFO.........55 50
DELAYED GATED PACKE....38 37
DIR L.................19 18
DISK CC L.............49 48
DISK INT ENB..........56 51
DISK INT L............56
DISK RQST H...........52  2
DISK WR H.............52  2
DISK WR OP H..........53 52
DMA ACK L.............14  7
DMA FIFO L............. 7
DMA IR................10  7
DMA OR................11  7
DMA RQST L............14  7
DP IO RQST L..........26 15
DRIVE SEL<0>..........51
DRIVE SEL<1>..........51
DS<0>.................53 52
DS<1>.................53 52
EMIT<1>...............50 49
EMIT<2>...............54 52 49
EMIT<3>...............56 53 49
EMIT<6>...............52 49
ENB BIT CNT H.........45 44
ENB CRC BITS H........44 39 38
ENB FIFO BITS H.......45 44 39
```

ENB IN FIFO<0> L.....35 31
ENB IN FIFO<1> L.....35 31
ENB MA H..... 5 3
ENB NET FIFO L.....37 31
ENB NET INT H.....47 45
ENB PL..... 3
ENB TOP..... 3
ENB USEC CLK H.....47 45
ENB USEC INT H.....47 45
END DMA INT.....26 13 7
EOP L.....18 14 13 7
ERR CHECK.....43 38
EXT A RQST H..... 2
EXT A WR H..... 2
EXT ADDR L.....24 5
EXT B RQST H..... 2
EXT B WR H..... 2
F<0>.....51 48
F<1>.....51 48
F<2>.....51 48
FA<0>.....50
FA<1>.....50
FA<2>.....50
FA<3>.....50
FAULT.....56
FIFO CLR L.....55 52
FIFO IN CLK ENB H.....55 52
FIFO OUT CLK ENB H.....55 52
FLOP ACK L.....18 14
FLOP INDEX L.....19 18
FLOP INT.....18 13
FLOP RD DATA L.....19
FLOP RDY L.....19 18
FLOP RQST L.....18 14
FLOP RW.....18
FLOP SEP DATA.....19 18
FLOP SK.....18
FLOP TK<0> L.....19 18
FLOP TWO SIDED L.....19 18
FLOP WINDOW.....19 18
FLOP WR DATA L.....19 18
FLOP WR ENB L.....19 18
FLOP WR PRO L.....19 18
FLUSH L.....11 10 7
FP CLK L..... 1
FP INT..... 1
FR..... 1
FR L..... 1
FS..... 1
GATED 1MHz.....47 46
GATED PACKET CLK H.....42 38
GATED PACKET CLK L.....44 42

```
GATED PLO CLK H.....54 49
GND.....55 53 53 52 51 51 51 51 50 49 48 46 45 44 43 42 41
GND.....40 39 38 37 36 34 32 31 30 29 28 26 25 24 22 21 20
GND.....20 19 19 19 18 16 15 13 12  9  7  6  5  4  3  2
GO H.....45 32
GPIB ACK L.....17 14
GPIB ATN.....17
GPIB DAV.....17
GPIB DI<1>.....17
GPIB DI<2>.....17
GPIB DI<3>.....17
GPIB DI<4>.....17
GPIB DI<5>.....17
GPIB DI<6>.....17
GPIB DI<7>.....17
GPIB DI<8>.....17
GPIB EOI.....17
GPIB IFC.....17
GPIB INT L.....17 13
GPIB NDAC.....17
GPIB NRFD.....17
GPIB PE.....27 17
GPIB RD.....26 17
GPIB REN.....17
GPIB RQST L.....17 14
GPIB SC.....27 17
GPIB SRQ.....17
GRANT DMA..... 3  2
HDCAR..... 5  4
HEAD LD L.....19 18
HOLD OFF L..... 5
ICLK-4R.....24  6  3
IDS<0>.....52 50
IDS<1>.....52 50
INDEX.....56
INIT L.....51 48 45 24
INT ENB.....16 13
IO MDO BUF<0>.....55 35 22 11
IO MDO BUF<10>.....55 35 22 11
IO MDO BUF<11>.....55 35 22 11
IO MDO BUF<12>.....55 35 22 11
IO MDO BUF<13>.....55 35 22 11
IO MDO BUF<14>.....55 35 22 11
IO MDO BUF<15>.....55 35 22 11
IO MDO BUF<1>.....55 35 22 11
IO MDO BUF<2>.....55 35 22 11
IO MDO BUF<3>.....55 35 22 11
IO MDO BUF<4>.....55 35 22 11
IO MDO BUF<5>.....55 35 22 11
IO MDO BUF<6>.....55 35 22 11
IO MDO BUF<7>.....55 35 22 11
IO MDO BUF<8>.....55 35 22 11
```

```
IO MDO BUF<9>.....55 35 22 11
IO MEM RQST..... 3  2
IO MEM WR..... 3  2
IO SEL H..... 5  4
IO SEL L..... 6  5  4
IOA<0>.....47 46 34 28  5
IOA<1>.....47 46 34 28  5  4
IOA<2>.....34 28
IOA<3>.....28
IOA<4>.....28
IOA<5>.....28
IOA<6>.....28
IOA<7>.....47 28 22
IOB BUF ENB L.....28 22
IOB ENB L.....28
IOB<0>.....56 51 50 46 45 44 43 34 24 22  9  8  6  4  1
IOB<10>.....56 22  6
IOB<11>.....22  6
IOB<12>.....22  6
IOB<13>.....22  6
IOB<14>.....22  6
IOB<15>.....22  8  6  1
IOB<1>.....56 51 50 46 45 44 43 34 24 22  9  8  6  4  1
IOB<2>.....56 51 50 46 45 44 43 34 24 22  9  8  6  5  4
IOB<3>.....56 51 50 46 45 44 43 34 24 22  9  8  6  5  4
IOB<4>.....56 51 50 46 45 44 43 34 22  9  8  5  4
IOB<5>.....56 51 50 46 45 44 43 34 22  9  8  5  4
IOB<6>.....56 51 50 46 45 44 43 34 22  9  8  5  4
IOB<7>.....56 51 50 46 45 44 43 34 22  9  8  6  4  1
IOB<8>.....56 45 22  6
IOB<9>.....56 22  6
IOD OUT FIFO..... 9  8
IOD OUT RDY.....27  8
IOD<0>.....22
IOD<10>.....22
IOD<11>.....22
IOD<12>.....22
IOD<13>.....22
IOD<14>.....22
IOD<15>.....22
IOD<1>.....22
IOD<2>.....22
IOD<3>.....22
IOD<4>.....22
IOD<5>.....22
IOD<6>.....22
IOD<7>.....22
IOD<8>.....22
IOD<9>.....22
J ADDR<0>.....33 30 29
J ADDR<1>.....33 30 29
J ADDR<2>.....33 30 29
```

J ADDR<3>.....33 30 29
J ADDR<4>.....33 30 29
J ADDR<5>.....33 30 29
J ADDR<6>.....33 30 29
J ADDR<7>.....33 30 29
J ADDR<8>.....30 29
J CMD<0>.....30 29
J CMD<1>.....30 29
J CMD<2>.....30 29
J CMD<3>.....30 29
JMP<0>.....49 48
JMP<1>.....49 48
JMP<2>.....49 48
JMP<3>.....49 48
KBD DATA H.....16
L MATCH H.....32
LATCH BUF D.....22 7
LD BIT CNT L.....47 44 28
LD D CTRL 1.....53 51 28
LD D CTRL 2.....51 28
LD DF CNTR L.....50 28
LD DF DATA L.....50 28
LD DMA ADDR L.....28 5
LD DMA CHAN L.....28 4
LD FP INST L.....28
LD INT ENB L.....28 24
LD NET CTRL L.....45 28
LD NET CTRL REG<0> 43 31
LD NET CTRL REG<1> 43 31
LD NET ENB L.....45 28
LD NET FIFO L.....37 31
LD NET FILE L.....34 28
LD OUT FIFO<0> H.....36 31
LD OUT FIFO<1> H.....36 31
LD UPROC DATA L.....28 9
LD USEC CLK L.....47 46 28
LDSR.....50 49
LOW CUR L.....19 18
M1 L.....27 16 15 13 12
MA EXT A..... 5
MA OUT L..... 6 5
MADDR<10>..... 6
MADDR<11>..... 6
MADDR<12>..... 6
MADDR<13>..... 6
MADDR<14>..... 6
MADDR<15>..... 6
MADDR<16>..... 6
MADDR<17>..... 6
MADDR<18>..... 6
MADDR<19>..... 6
MADDR<2>..... 5

```
MADDR<3>..............  5
MADDR<4>..............  5
MADDR<5>..............  5
MADDR<6>..............  5
MADDR<7>..............  5
MADDR<8>..............  6
MADDR<9>..............  6
MATCH H...............50 49
MDI<0>................55 36 10
MDI<10>...............55 36 10
MDI<11>...............55 36 10
MDI<12>...............55 36 10
MDI<13>...............55 36 10
MDI<14>...............55 36 10
MDI<15>...............55 36 10
MDI<1>................55 36 10
MDI<2>................55 36 10
MDI<3>................55 36 10
MDI<4>................55 36 10
MDI<5>................55 36 10
MDI<6>................55 36 10
MDI<7>................55 36 10
MDI<8>................55 36 10
MDI<9>................55 36 10
MDO<0>................22
MDO<10>...............22
MDO<11>...............22
MDO<12>...............22
MDO<13>...............22
MDO<14>...............22
MDO<15>...............22
MDO<1>................22
MDO<2>................22
MDO<3>................22
MDO<4>................22
MDO<5>................22
MDO<6>................22
MDO<7>................22
MDO<8>................22
MDO<9>................22
MFM...................25 19 18
NET DMA RQST L.......36 31
NET FIFO IR..........37 32
NET FIFO OR..........37 32
NET INT H............47 43
NET INT L............45 43
NET MATCH H..........37 32
NET RQST H...........36  2
NET WR H.............36  2
NET XMIT+............39
NET XMIT-............39
O SEL ENB............31 30
```

ODD..... 7
ON CYLINDER.....56
P IO RQST L.....27 26 16 12
P MEM RQST L.....26 13 12
P RESET L.....51 48
P WR L.....14 12
PACKET CLK H.....44 42
PACKET CLK L.....44 42
PACKET DATA H.....44 42 38 37
PALR7..... 6 5
PERQ INT.....13 9
PHDCAR..... 4
PIP H.....43 42 32
PL DISK.....55 3
PL EXT A..... 3
PL EXT B..... 3
PL NET.....35 3
PL UPROC.....11 3
PLO CLK H.....55 54 53 52 50
PLO CLK L.....54 53 50
PREMATCH H.....54 50
PROC CLK H.....54 50 49
PROC CLK L.....54 52 48
PROM CS L.....26
PU1.....54 28 27 15 13 9 8 1
PU3.....15 10 7
PU4..... 5 4 3 2
PU5.....56 55 54 53 52 50 49 48
PU6.....46 44 43 41 41 38 37 36 34 32 29
PU7.....45 39
R<10>..... 6
R<11>..... 6
R<12>..... 6
R<13>..... 6
R<14>..... 6
R<15>..... 6
R<16>..... 6
R<17>..... 6
R<18>..... 6
R<19>..... 6
R<2>..... 5
R<3>..... 5
R<4>..... 5
R<5>..... 5
R<6>..... 5
R<7>..... 6 5
R<8>..... 6
R<9>..... 6
RA<1>..... 4 3 2
RA<2>..... 4 3 2
RA<3>..... 4 3 2
RAM CS L.....26 23

RAM WE L.....26 23
RCV ALL.....45 32
RCV CLK H.....42 41
RCV CLK L.....42 41
RCV COLLISION.....45 40
RCV DATA.....42 41
RCV DATA OUT.....45 41 40
RCV EDGE DET.....41
RCV FLOP.....41
RCV+.....40
RCV-.....40
RD BIT CNT L.....47 44 28
RD DATA +.....53
RD DATA -.....53
RD DATA H.....53 50
RD DISK STAT L.....56 56 28
RD FP RESULT L.....28
RD FP STAT L.....28 1
RD GATE.....53
RD L.....26 21 18 16 15 14 13 12 7
RD NET STAT L.....43 28
RD UPROC DATA L.....28 13 8
RD UPROC STAT L.....28 8
RD USEC CLK L.....47 46 28
RESET D L.....54 53 52 48
RESET FIFO & CRC H.....43 38
RESET FIFO & CRC L.....47 44 43 37 36 35
RESET H.....24 18 14
RESET L.....27 24 21 17 16 15 12 9 8 7
RESET NET H.....45 44 41 31
RESET NET L.....45 29
RS232 CD A.....15
RS232 CD B.....16
RS232 CTS A.....15
RS232 CTS B.....16
RS232 DTR A.....15
RS232 DTR B.....16
RS232 RC IN A.....15
RS232 RC IN B.....16
RS232 RD A.....15
RS232 RD B.....16
RS232 RQST L.....15
RS232 RTS A.....15
RS232 RTS B.....16
RS232 TC IN A.....15
RS232 TC IN B.....15
RS232 TC OUT A.....15
RS232 TC OUT B.....16
RS232 TD A.....15
RS232 TD B.....16
RW..... 4 3
S CLK 1..... 3

S CLK 3..... 5 3
SECTOR CLK.....54 53
SEEK ERR.....56
SEL CLK CTRL L.....27 21
SEL CLK DATA L.....27 21
SEL CTC A L.....27 15
SEL CTC B L.....27 16
SEL DMA FLUSH L.....27 7
SEL DMA L.....27 14
SEL DMA START L.....27 7
SEL FLOPPY L.....27 18
SEL GPIB L.....27 17
SEL INT L.....27 13
SEL IOD RD L.....27 9
SEL IOD STAT L.....27 9
SEL IOD WR L.....27 8 7
SEL SIO A L.....27 15
SEL SIO B L.....27 16
SEL USEC CLK L.....47 46
SIDE SEL L.....19 18
SIO ACK L.....15 14
SIO INT ENB.....16 15
SIO RQST L.....15 14
SM ADDR<0>.....30 29
SM ADDR<1>.....30 29
SM ADDR<2>.....30 29
SM ADDR<3>.....30 29
SM ADDR<4>.....30 29
SM ADDR<5>.....30 29
SM ADDR<6>.....30 29
SM ADDR<7>.....30 29
SM ADDR<8>.....30 29
SMA<0>.....52 48
SMA<1>.....52 48
SMD ADDR<0>.....49 48
SMD ADDR<1>.....49 48
SMD ADDR<2>.....49 48
SMD ADDR<3>.....49 48
SMD ADDR<4>.....49 48
SMD ADDR<5>.....49 48
SMD ADDR<6>.....49 48
SMD ADDR<7>.....49 48
SMD ADDR<8>.....49 48
SPEAK DATA IN.....20 15
SPEAKER.....20
SPEECH CLK.....20 15
SPEECH RQST L.....15
SPEECH SEL L.....27 15
STEP CRC H.....43 38
STEP L.....19 18
SYNC BITS.....53 50
SYNC L.....44 42

T BIT.....51 49
T2 BIT.....51 49
TABLET CLK.....15
TABLET DATA L.....15
TC IN B.....16
TESTCLK.....27 21
TOP DISK.....55 3
TOP EXT A L..... 3
TOP EXT B L..... 3
TOP NET.....36 3
TOP UPROC.....10 3
TRANSMIT H.....45 32
TZ CLK.....17 16 15 14 13 12 9 7
UNIT READY.....56
UNIT SEL L.....19 18
UNLD DISK RQST L.....52 3
UNLD EXT A RQST L..... 5 3
UNLD EXT B RQST L..... 3
UNLD IN FIFO L.....35 31
UNLD NET FIFO L.....37 31
UNLD NET RQST L.....36 3
UNLD UPROC RQST L..... 7 3
UPROC ENB.....24 8
UPROC INT L..... 8
UPROC RDY..... 9 8
UPROC RDY ENB.....24 9
UPROC RDY INT L..... 9
UPROC RQST H..... 7 2
UPROC WR H.....27 7 2
USEC CLK OVFL H.....47 46 43
USEC I<2>.....47 46
WA<1>..... 4 3
WA<2>..... 4 3
WA<3>..... 4 3
WAIT FOR SYNC H.....43 42
WAIT H.....54 49
WCLK.....25 18
WCNT L..... 5 4
WHI L..... 6 5
WLO L..... 6 5
WR CLK +.....53
WR CLK -.....53
WR DATA.....55 50
WR DATA +.....53
WR DATA -.....53
WR GATE.....53
WR L.....27 26 18 17 16 15 13 12 7
WREG L..... 5 4
X CONST ENB L.....33 31
X MUX<0>.....43 37 36 35 33 32
X MUX<1>.....43 37 36 35 33
X MUX<2>.....43 37 36 35 33

```
X MUX<3>.....43 37 36 35 33
X MUX<4>.....43 37 36 35 33
X MUX<5>.....43 37 36 35 33
X MUX<6>.....37 36 35 33
X MUX<7>.....43 37 36 35 33
X SEL<0>.....31 30
X SEL<1>.....31 30
XMIT BIT STREAM.....39
XMIT CLK SEL H.....43 42
XMIT DONE L.....44 43
XMIT FIFO DATA H.....42 39 37
XMIT H.....44 43 39 37 32
XMIT L.....43 37
Y MUX<0>.....37 34 33
Y MUX<1>.....37 34 33
Y MUX<2>.....37 34 33
Y MUX<3>.....37 34 33
Y MUX<4>.....37 34 33
Y MUX<5>.....37 34 33
Y MUX<6>.....37 34 33
Y MUX<7>.....37 34 33
Y SEL<0>.....34 31 30
Y SEL<1>.....34 31 30
Y SEL<2>.....34 31 30
Y SEL<3>.....34 33 30
Z CLK.....16 15 12
Z80 INT L.....16 15 13 12
Z80 WAIT L.....14 12
```

110006.wlist from [Ed] Printed 18 Jan 85 17:13:26

This Run Was made using the following files:

110006.PART
e56.WL
e55.WL
e54.WL
e53.WL
e52.WL
e51.WL
e50.WL
e49.WL
e48.WL
e47.WL
e46.WL
e45.WL
e44.WL
e43.WL
e42.WL
e41.WL
e40.WL
e39.WL
e38.WL
e37.WL
e36.WL
e35.WL
e34.WL
e33.WL
e32.WL
e31.WL
e30.WL
e29.WL
e28.WL
e27.WL
e26.WL
e25.WL
e24.WL
e23.WL
e22.WL
e21.WL
e20.WL
e19.WL
e18.WL
e17.WL
e16.WL
e15.WL
e14.WL
e13.WL
e12.WL
e11.WL
e10.WL
e09.WL
e08.WL

e07.WL
e06.WL
e05.WL
e04.WL
e03.WL
e02.WL
e01.WL

Number Of Nets = 1077
Begin Wirelist

1: U213-15 U213-4 U213-7 R1-1 R2-1 U197-8
1: U197-10 U203-5 U203-4 U200-4 U110-1
1: U181-5 U109-19 U181-4 U109-15 U148-11
1: U164-15 U163-7 U149-3 U149-12 U150-13
1: U218-12 U217-12 U215-2 U217-1 U236-13
1: U216-15 U217-2 U220-12 U221-12 U219-12
1: U123-4 U123-5 U123-6 U146-15 U146-3
1: U146-13 U146-2 U65-1 U46-1 U126-24
1: U126-25 C103-2 U158-22 U143-1 U143-15
1: U143-4 U158-23 U157-22 U157-23 U22-3
1: U22-1 U15-19 U16-19 U86-6 JA43-1
1: JA41-1 JA39-1 JA37-1 JA35-1 JA33-1
1: JA31-1 JA29-1 JA3-1 JA1-1 JA5-1 JA7-1
1: JA9-1 JA25-1 JA23-1 JA21-1 JA19-1
1: JA17-1 JA15-1 JA13-1 JA11-1 JA27-1
1: JA45-1 JA47-1 JA49-1 C139-2 C159-2
1: U225-15 U225-2 R7-2 C121-2 R13-2
1: U227-6 U187-15 R12-2 U227-7 U227-12
1: U227-11 U227-10 U227-5 U227-4 U227-3
1: U225-1 U225-13 C36-1 B1-2 C35-1 U168-1
1: U242-1 U243-1 U161-1 U175-7 U108-4
1: U175-12 U175-14 U175-11 U175-5 U175-4
1: U175-3 U108-3 U122-22 U233-5 U230-13
1: U230-11 U230-10 U35-13 U35-23 U35-25
1: U35-27 U35-29 U36-15 U56-15 U75-15
1: U114-15 U94-19 U73-3 U69-1 U69-4
1: U53-13 U52-13 U87-15 U177-9 U54-1
1: U113-3 U117-7 U116-11 U137-11 U138-11
1: U117-11 R19-2 R34-1 R18-2 R20-2 C158-2
1: C155-2 U198-11 U94-1 U95-15 U112-19
1: U78-11 U212-1 U196-1 U1-27 U4-15
1: U1-29 U1-25 U1-23 U1-13 JP2-1 JP3-1
1: U47-5 U7-7 U7-4 U5-15 U26-15 U2-15
1: U24-15 U39-1 U34-1 U77-5 U58-15 U59-2
1: U60-2 U40-6 U77-4 U112-1 U12-1 U12-19
1: JB33-1 JB35-1 JB37-1 JB38-1 JB1-1
1: JB3-1 JB5-1 JB7-1 JB9-1 JB11-1 JB13-1
1: JB15-1 JB17-1 JB19-1 JB21-1 JB23-1
1: JB25-1 JB27-1 JB29-1 JB31-1 JB41-1
1: JB44-1 JB47-1 JB50-1 C137-2 C136-2

```
 1: Q1-1 U68-9 U32-1 U8-4 U19-5 U18-3
 1: U18-5 U18-8 U19-3 U19-11 U19-10 U19-15
 1: U19-1 U223-9 U202-12                    .!GND

 2: R35-2 B1-1                              .%B1-1

 3: U187-12 U187-5 R13-1 U187-10 C121-1
 3:                                         .%C121-1

 4: U187-6 R8-2 C124-2                      .%C124-2

 5: U227-8 C126-1                           .%C126-1

 6: U227-1 C139-1                           .%C139-1

 7: R8-1 U187-7 C124-1 C153-1               .%C153-1

 8: U63-15 C25-2                            .%C25-2

 9: R35-1 D2-1                              .%D2-1

10: U62-1 D1-2 D2-2                         .%D2-2

11: U187-11 R9-1 R10-2                      .%R10-2

12: U187-4 R11-2                            .%R11-2

13: U187-3 R9-2 C125-2 R12-1                .%R12-1

14: R28-1 U226-3 C140-1 R23-1               .%R23-1

15: U226-9 R24-1                            .%R24-1

16: R28-2 C154-1 U226-4 R24-2               .%R24-2

17: R21-1 C156-2 U206-3 R27-1               .%R27-1

18: R22-2 C157-2 U206-4 R27-2               .%R27-2

19: C25-1 U63-14 R30-2                      .%R30-2

20: C37-2 U63-2 R31-2                       .%R31-2

21: U229-13 U229-7 U229-4 U229-10 R33-1
21: R34-2                                   .%R34-2

22: C135-2 R6-1                             .%R6-1

23: R7-1 U227-2 R6-2                        .%R6-2

24: U16-4 RN5-5                             .%RN5-5
```

25: U205-5 RN9-5 .%RN9-5

26: U190-12 RN9-9 .%RN9-9

27: U4-10 U1-35 .%U1-35

28: U4-13 U1-37 .%U1-37

29: U10-5 U14-5 U10-6 U10-7 .%U10-7

30: U127-8 U107-11 .%U107-11

31: U108-5 U151-4 RN2-9 U108-6 U210-6
31: U210-9 U210-3 U210-4 U210-5 U210-10
31: U210-7 U175-2 U175-1 U151-14 U151-12
31: U151-11 U151-2 U151-3 U151-10 U151-15
31: U175-9 U108-1 U210-1 U108-10 U108-7
31: .%U108-7

32: U108-11 U108-9 .%U108-9

33: U110-2 U109-1 .%U109-1

34: U110-13 U109-11 .%U109-11

35: U110-14 U109-12 .%U109-12

36: U110-17 U109-13 .%U109-13

37: U110-18 U109-14 .%U109-14

38: U110-5 U109-2 .%U109-2

39: U114-2 U110-6 U109-3 .%U109-3

40: U110-3 U109-6 .%U109-6

41: U110-4 U109-7 .%U109-7

42: U110-7 U109-8 .%U109-8

43: U110-8 U109-9 .%U109-9

44: U31-9 U11-13 .%U11-13

45: U31-5 U11-17 .%U11-17

46: U94-18 U113-12 .%U113-12

47: U120-23 U120-14 U113-4 .%U113-4

48: U110-9 U109-4 U114-3 .%U114-3

```
49: U23-4 U114-7                                .%U114-7

50: U93-5 U115-1                                .%U115-1

51: U50-8 U115-2                                .%U115-2

52: U49-6 U115-3                                .%U115-3

53: U137-1 U116-1 U115-13 U138-1 U117-1
53:                                             .%U117-1

54: U138-12 U117-6                              .%U117-6

55: U118-5 U118-12                              .%U118-12

56: U83-11 U118-2                               .%U118-2

57: U13-5 U12-2                                 .%U12-2

58: U13-19 U12-8                                .%U12-8

59: U120-9 U121-1                               .%U121-1

60: U130-11 U121-15                             .%U121-15

61: U172-6 U123-1                               .%U123-1

62: U126-26 U124-5                              .%U124-5

63: RN1-3 U126-12                               .%U126-12

64: U82-8 U127-7                                .%U127-7

65: U124-8 U128-2                               .%U128-2

66: U145-16 U128-4                              .%U128-4

67: U12-13 U13-12                               .%U13-12

68: U12-11 U13-15                               .%U13-15

69: U112-6 U13-16                               .%U13-16

70: U12-4 U13-2                                 .%U13-2

71: U12-17 U13-6                                .%U13-6

72: U12-15 U13-9                                .%U13-9

73: U144-27 U130-9 U130-10                      .%U130-10
```

74: U113-6 U130-13 .%U130-13

75: U53-3 U52-3 U130-3 .%U130-3

76: U16-11 U131-10 .%U131-10

77: U145-29 U131-11 .%U131-11

78: U86-5 U131-2 .%U131-2

79: U86-7 U131-5 .%U131-5

80: U126-22 U131-8 .%U131-8

81: U44-10 U133-1 .%U133-1

82: U215-11 U42-4 U134-3 .%U134-3

83: U136-9 U135-8 .%U135-8

84: U135-9 U136-1 .%U136-1

85: U135-12 U136-6 .%U136-6

86: U76-4 U198-3 U136-8 .%U136-8

87: U138-2 U117-2 U116-2 U76-8 U137-2
87: .%U137-2

88: U116-12 U137-6 .%U137-6

89: U137-12 U138-6 .%U138-6

90: U19-9 U14-2 .%U14-2

91: RN8-3 U144-17 .%U144-17

92: U33-11 U145-14 .%U145-14

93: U15-9 U145-17 .%U145-17

94: U21-1 U16-15 U145-25 .%U145-25

95: U15-17 U145-27 .%U145-27

96: U21-13 U145-30 .%U145-30

97: U15-16 U16-16 U145-33 .%U145-33

98: U15-18 U16-18 U145-34 .%U145-34

99: U15-7 U145-35 .%U145-35

100: U15-8 U145-37	.%U145-37
101: U16-8 U15-6 U145-38	.%U145-38
102: U131-13 U145-39	.%U145-39
103: U238-1 U237-2 U147-21	.%U147-21
104: U25-6 U148-7	.%U148-7
105: U150-18 U149-1	.%U149-1
106: U150-2 U149-10	.%U149-10
107: U150-3 U149-11	.%U149-11
108: U150-16 U149-16	.%U149-16
109: U150-17 U149-17	.%U149-17
110: U150-19 U149-2	.%U149-2
111: U150-11 U149-7	.%U149-7
112: U150-1 U149-8	.%U149-8
113: U145-36 U15-15	.%U15-15
114: U162-3 U152-17	.%U152-17
115: RN8-10 U157-11	.%U157-11
116: U205-8 U157-12	.%U157-12
117: U189-4 U157-16	.%U157-16
118: U205-3 U157-18	.%U157-18
119: U205-6 U157-19	.%U157-19
120: RN1-8 U158-11	.%U158-11
121: U190-8 U158-12	.%U158-12
122: U192-3 U158-13	.%U158-13
123: U207-9 U158-16	.%U158-16
124: U190-3 U158-18	.%U158-18
125: U190-6 U158-19	.%U158-19

126: U112-7 U158-29 .%U158-29

127: U172-8 U158-33 .%U158-33

128: U143-7 U158-34 .%U158-34

129: U172-11 U158-35 .%U158-35

130: U158-28 U161-4 U112-8 U158-27 U159-13
130: .%U159-13

131: U193-4 U159-17 .%U159-17

132: U157-28 U157-27 U160-13 .%U160-13

133: U160-14 RN1-5 U160-11 U160-16 .%U160-16

134: R5-2 U161-16 .%U161-16

135: U131-4 U162-1 .%U162-1

136: U234-13 U162-8 .%U162-8

137: U148-16 U163-1 .%U163-1

138: U179-7 U164-6 U163-10 .%U163-10

139: U179-4 U164-3 U163-11 .%U163-11

140: U148-13 U163-13 .%U163-13

141: U148-14 U163-14 .%U163-14

142: U148-15 U163-15 .%U163-15

143: U148-17 U163-2 .%U163-2

144: U148-18 U163-3 .%U163-3

145: U148-19 U163-4 .%U163-4

146: U179-9 U164-10 U163-9 .%U163-9

147: U165-10 U164-11 .%U164-11

148: U165-2 U164-2 .%U164-2

149: U165-7 U164-5 .%U164-5

150: U181-10 U166-4 .%U166-4

```
151: U181-14 U166-9                    .%U166-9
152: U146-12 U172-5                    .%U172-5
153: U173-5 U173-1                     .%U173-1
154: U196-10 U201-6 U173-3             .%U173-3
155: U228-12 U175-15                   .%U175-15
156: U132-10 U176-11                   .%U176-11
157: U198-9 U176-2                     .%U176-2
158: U112-9 U177-1                     .%U177-1
159: U17-8 U18-1                       .%U18-1
160: U17-6 U18-10                      .%U18-10
161: U19-7 U18-11                      .%U18-11
162: U19-13 U18-12                     .%U18-12
163: U203-3 U180-10                    .%U180-10
164: U203-1 U180-2                     .%U180-2
165: U203-2 U180-7                     .%U180-7
166: U166-13 U181-9                    .%U181-9
167: RN9-7 U188-12                     .%U188-12
168: RN9-8 U188-9                      .%U188-9
169: RN1-7 U189-12 U189-5 U189-10      .%U189-10
170: U157-15 U189-2                    .%U189-2
171: U157-17 U189-9                    .%U189-9
172: U192-2 U190-11                    .%U190-11
173: RN9-6 U190-5                      .%U190-5
174: U113-5 U191-10                    .%U191-10
175: U195-11 U191-11                   .%U191-11
176: U199-15 U191-13                   .%U191-13
```

177: U215-6 U191-5	.%U191-5
178: U120-15 U191-8	.%U191-8
179: U159-10 U192-1	.%U192-1
180: U189-13 U157-14 U192-11	.%U192-11
181: U160-17 U192-13	.%U192-13
182: U160-10 U193-1	.%U193-1
183: U215-4 U193-11	.%U193-11
184: U205-11 U193-2	.%U193-2
185: U157-13 U193-3	.%U193-3
186: U188-8 U193-5	.%U193-5
187: U201-4 U193-8	.%U193-8
188: U83-6 U194-11	.%U194-11
189: U197-17 U195-10	.%U195-10
190: U197-16 U195-12	.%U195-12
191: U197-3 U195-2	.%U195-2
192: U197-2 U195-5	.%U195-5
193: U197-1 U195-7	.%U195-7
194: U173-2 U196-20	.%U196-20
195: U196-2 U196-3	.%U196-3
196: U213-9 U199-6 U197-12	.%U197-12
197: U199-4 U213-10 U197-13	.%U197-13
198: U199-3 U213-11 U197-14	.%U197-14
199: U199-12 U197-15	.%U197-15
200: U76-6 U198-2	.%U198-2
201: U201-2 U200-14	.%U200-14
202: U200-11 U201-1	.%U201-1

```
203: U224-15 U201-8                          .%U201-8

204: U91-8 U215-13 U198-10 U202-1            .%U202-1

205: U245-23 U245-14 U244-14 U224-14 U202-10
205:                                         .%U202-10

206: U204-2 U202-11                          .%U202-11

207: U176-1 U202-6                           .%U202-6

208: U223-15 U202-8                          .%U202-8

209: U201-10 U202-9                          .%U202-9

210: U128-8 U203-10                          .%U203-10

211: U204-3 U203-11                          .%U203-11

212: U228-5 U203-13                          .%U203-13

213: U203-12 U204-5                          .%U204-5

214: U203-9 U204-9                           .%U204-9

215: RN9-10 U205-12                          .%U205-12

216: R29-1 C155-1 U226-6 U206-6              .%U206-6

217: R22-1 U206-9                            .%U206-9

218: U193-6 U158-14 U207-13                  .%U207-13

219: U158-15 U207-2                          .%U207-2

220: U158-17 U207-4                          .%U207-4

221: U233-4 U208-9                           .%U208-9

222: U208-15 U209-4                          .%U209-4

223: U21-5 U22-6 U21-10                      .%U21-10

224: U108-12 U210-2                          .%U210-2

225: U132-8 U212-10                          .%U212-10

226: U212-2 U212-3                           .%U212-3

227: U228-10 U214-13                         .%U214-13

228: U219-16 U214-15                         .%U214-15
```

229: U219-17 U214-16 .%U214-16

230: U219-1 U214-17 .%U214-17

231: U219-2 U214-18 .%U214-18

232: U228-8 U215-3 .%U215-3

233: U191-1 U215-5 .%U215-5

234: U236-18 U217-16 .%U217-16

235: U236-19 U217-17 .%U217-17

236: U236-16 U218-1 .%U218-1

237: U236-15 U218-17 .%U218-17

238: U236-17 U218-2 .%U218-2

239: U145-32 U22-14 .%U22-14

240: U145-31 U22-2 .%U22-2

241: U21-7 U22-4 .%U22-4

242: U21-12 U21-15 U22-5 .%U22-5

243: U16-17 U22-7 .%U22-7

244: U235-15 U221-2 .%U221-2

245: U245-15 U222-8 .%U222-8

246: U222-4 U222-12 U224-9 U223-1 .%U223-1

247: U245-1 U245-10 U244-10 U224-10 U223-10
247: .%U223-10

248: U222-9 U244-23 U223-14 .%U223-14

249: U204-1 U201-9 U223-23 .%U223-23

250: U222-13 U224-1 .%U224-1

251: U222-10 U244-15 U224-23 .%U224-23

252: C153-2 U225-10 .%U225-10

253: C135-1 U225-4 .%U225-4

```
254: R25-2 U206-1 C158-1 U226-1          .%U226-1

255: R26-2 U206-13 U206-8 U226-8 U226-13
255:                                     .%U226-13

256: R17-1 R16-2 U229-12                 .%U229-12

257: U46-19 U23-3                        .%U23-3

258: U221-16 U234-17                     .%U234-17

259: U221-17 U234-18                     .%U234-18

260: U221-1 U234-19                      .%U234-19

261: U162-11 U235-12                     .%U235-12

262: U176-6 U235-13                      .%U235-13

263: U220-16 U235-16                     .%U235-16

264: U220-17 U235-17                     .%U235-17

265: U220-1 U235-18                      .%U235-18

266: U220-2 U235-19                      .%U235-19

267: U147-30 U237-12                     .%U237-12

268: U147-29 U237-13                     .%U237-13

269: U147-28 U237-14                     .%U237-14

270: U147-27 U237-15                     .%U237-15

271: U147-26 U237-16                     .%U237-16

272: U147-25 U237-17                     .%U237-17

273: U147-24 U237-18                     .%U237-18

274: U147-23 U237-19                     .%U237-19

275: U147-22 U237-20                     .%U237-20

276: U147-31 U238-12                     .%U238-12

277: U147-32 U238-13                     .%U238-13

278: U147-33 U238-14                     .%U238-14

279: U147-34 U238-15                     .%U238-15
```

280: U147-35 U238-16 .%U238-16

281: U147-36 U238-17 .%U238-17

282: U147-37 U238-18 .%U238-18

283: U147-38 U238-19 .%U238-19

284: U47-3 U24-12 .%U24-12

285: U47-2 U24-13 .%U24-13

286: U47-1 U24-14 .%U24-14

287: U17-3 U240-19 .%U240-19

288: U222-5 U244-1 .%U244-1

289: U222-11 U244-9 .%U244-9

290: U93-8 U223-16 U224-16 U244-16 U245-16
290: .%U245-16

291: U201-11 U223-8 U224-8 U244-8 U245-8
291: .%U245-8

292: U222-6 U245-9 .%U245-9

293: U30-17 U115-5 U25-12 .%U25-12

294: JB20-1 U25-8 .%U25-8

295: U28-8 U27-11 .%U27-11

296: U49-2 U27-5 .%U27-5

297: U49-5 U28-5 .%U28-5

298: U27-1 U28-6 .%U28-6

299: U1-1 U3-13 .%U3-13

300: U1-3 U3-14 .%U3-14

301: U1-18 U3-17 .%U3-17

302: U1-20 U3-18 .%U3-18

303: U4-12 U3-7 .%U3-7

304: U1-39 U3-8 .%U3-8

305: U115-4 U30-11	.%U30-11
306: U29-12 U30-13	.%U30-13
307: U29-15 U30-14	.%U30-14
308: U29-19 U30-18	.%U30-18
309: U115-6 U30-19	.%U30-19
310: U29-2 U30-7	.%U30-7
311: U29-6 U30-8	.%U30-8
312: U28-11 U31-1	.%U31-1
313: U33-1 U31-19	.%U31-19
314: U85-8 U31-2	.%U31-2
315: U11-15 U31-6	.%U31-6
316: U33-2 U32-2	.%U32-2
317: U33-4 U32-4	.%U32-4
318: U66-10 U33-12	.%U33-12
319: U31-16 U33-3	.%U33-3
320: U127-9 U33-5	.%U33-5
321: U107-1 U33-6	.%U33-6
322: U74-2 U35-22	.%U35-22
323: U35-1 U37-13	.%U37-13
324: U35-3 U37-14	.%U37-14
325: U35-18 U37-17	.%U37-17
326: U35-20 U37-18	.%U37-18
327: U35-33 U37-3	.%U37-3
328: U35-35 U37-4	.%U37-4
329: U35-37 U37-7	.%U37-7
330: U35-39 U37-8	.%U37-8

331: U39-8 U38-10 .%U38-10

332: U39-6 U38-11 .%U38-11

333: U39-4 U38-12 .%U38-12

334: U39-2 U38-13 .%U38-13

335: U39-17 U38-3 .%U38-3

336: U39-15 U38-4 .%U38-4

337: U39-11 U38-6 .%U38-6

338: U59-5 U40-5 U39-12 .%U39-12

339: U59-9 U40-3 U39-16 .%U39-16

340: U59-11 U40-2 U39-18 .%U39-18

341: U90-1 U39-19 .%U39-19

342: U60-5 U40-14 U39-3 .%U39-3

343: U60-7 U40-12 U39-5 .%U39-5

344: U60-9 U40-11 U39-7 .%U39-7

345: U60-11 U40-10 U39-9 .%U39-9

346: U1-7 U4-1 .%U4-1

347: U1-33 U4-6 .%U4-6

348: U66-11 U40-15 .%U40-15

349: U42-3 U42-2 .%U42-2

350: U80-9 U45-10 .%U45-10

351: U62-18 U80-12 U45-11 .%U45-11

352: U80-2 U62-4 U45-5 .%U45-5

353: U80-5 U62-5 U45-6 .%U45-6

354: U80-6 U62-6 U45-7 .%U45-7

355: U80-15 U62-7 U45-8 .%U45-8

356: U62-3 U80-16 U45-9 .%U45-9

357: U45-4 U62-12 U46-11 .%U46-11

358: U86-1 U46-14 .%U46-14

359: U45-1 U62-10 U46-15 .%U46-15

360: U45-2 U62-9 U46-17 .%U46-17

361: U50-9 U50-1 U49-4 .%U49-4

362: U7-9 U5-12 .%U5-12

363: U134-9 U50-11 .%U50-11

364: U50-6 U50-13 .%U50-13

365: U30-12 U51-12 .%U51-12

366: U84-10 U51-5 .%U51-5

367: U87-4 U53-1 U52-1 .%U52-1

368: U87-9 U53-14 U52-14 .%U52-14

369: U87-7 U53-15 U52-15 .%U52-15

370: U87-12 U53-2 U52-2 .%U52-2

371: U77-6 U58-11 .%U58-11

372: U77-7 U58-14 .%U58-14

373: U77-3 U58-2 .%U58-2

374: U77-2 U58-5 .%U58-5

375: U39-14 U40-4 U59-7 .%U59-7

376: U11-4 U6-8 U6-12 .%U6-12

377: U1-22 U6-2 .%U6-2

378: U58-4 U59-1 U60-1 .%U60-1

379: U58-12 U59-13 U60-13 .%U60-13

380: U58-9 U59-14 U60-14 .%U60-14

381: U58-7 U59-15 U60-15 .%U60-15

382: U23-11 U59-3 U60-3 .%U60-3

383: U45-3 U46-13 U62-11 .%U62-11

384: X2-1 C36-2 U62-16 .%U62-16

385: C37-1 U63-1 .%U63-1

386: U64-5 U65-12 .%U65-12

387: U64-6 U65-15 .%U65-15

388: U64-7 U65-16 .%U65-16

389: U64-8 U65-19 .%U65-19

390: U48-5 U65-2 .%U65-2

391: U48-6 U65-5 .%U65-5

392: U48-7 U65-6 .%U65-6

393: U48-8 U65-9 .%U65-9

394: U47-4 U66-6 .%U66-6

395: U66-1 U66-8 .%U66-8

396: U66-3 U67-3 .%U67-3

397: U84-9 U67-5 .%U67-5

398: U84-13 U67-9 .%U67-9

399: U70-15 U69-12 .%U69-12

400: U70-14 U69-15 .%U69-15

401: U70-13 U69-16 .%U69-16

402: U70-4 U69-2 .%U69-2

403: U70-3 U69-5 .%U69-5

404: U70-2 U69-6 .%U69-6

405: U70-1 U69-9 .%U69-9

406: U5-13 U7-10 .%U7-10

407: U5-14 U7-11 .%U7-11

408: U94-3 U70-7 .%U70-7

409: U71-8 U72-10 .%U72-10

410: U71-13 U72-12 .%U72-12

411: U71-3 U72-2 .%U72-2

412: U71-4 U72-5 .%U72-5

413: U71-7 U72-7 .%U72-7

414: U54-19 U76-1 .%U76-1

415: U79-9 U78-8 .%U78-8

416: U79-1 U79-5 .%U79-5

417: U82-1 U44-7 U81-4 .%U81-4

418: U83-2 U82-2 .%U82-2

419: U123-11 U82-3 .%U82-3

420: U83-4 U123-9 U82-4 .%U82-4

421: U127-10 U82-5 .%U82-5

422: U174-14 U83-3 .%U83-3

423: U90-4 U88-3 .%U88-3

424: U84-12 U88-5 .%U88-5

425: U12-6 U9-16 .%U9-16

426: U89-8 U90-5 .%U90-5

427: U134-1 U91-6 .%U91-6

428: U94-13 U92-9 .%U92-9

429: U92-7 U94-11 .%U94-11

430: U92-10 U94-15 .%U94-15

431: U91-13 U91-3 U94-16 .%U94-16

432: U94-14 U94-8 .%U94-8

433: U91-1 U91-2 U96-6 .%U96-6

434: U94-4 U96-8 .%U96-8

```
435: U62-17 C35-2 X2-2                    .%X2-2

436: U207-14 U189-14 C159-1 U227-14 J2-1
436: R25-1                                .+12V

437: J94-1 C125-1 R10-1 U225-14 R11-1
437: D1-1 U122-27 U122-26 U122-1 R33-2
437:                                      .+5V

438: U207-1 U189-1 R29-2 J99-1 Q1-2 C137-1
438:                                      .-12V

439: U225-8 C136-1 Q1-3 U8-12             .-5V

440: U210-12 U211-11                      .1 MHZ

441: U151-9 U121-16 U120-16 U136-10 U95-10
441:                                      .10 MHZ H

442: U151-7 U136-13 U135-11 U95-13        .10 MHZ L

443: U225-12 U210-13                      .2 MHZ

444: U151-13 U151-5 U198-1                .20 MHZ

445: U46-2 U46-4 U21-9 U175-6 U210-14
445:                                      .4 MHZ

446: U90-6 U108-2 U151-1                  .40 MHZ

447: U145-19 U86-3 U108-13                .8 MHZ

448: U161-14 U126-27 U143-3 U143-5 U159-19
448: U157-34 U160-19 U147-6 U145-5 U106-1
448: U105-1 U104-1 U103-1 U102-1 U101-1
448: U99-1 U100-1 U122-10 U174-1 U81-1
448:                                      .A<0>

449: U144-40 U107-6 U106-16 U105-16 U104-16
449: U103-16 U102-16 U101-16 U99-16 U100-16
449: U122-21                              .A<10>

450: U144-1 U107-9 U106-17 U105-17 U104-17
450: U103-17 U102-17 U101-17 U99-17 U100-17
450: U122-23                              .A<11>

451: U144-2 U107-12 U106-18 U105-18 U104-18
451: U103-18 U102-18 U101-18 U99-18 U100-18
451: U122-2                               .A<12>

452: U144-3 U107-15 U106-19 U105-19 U104-19
```

```
452: U103-19 U102-19 U101-19 U99-19 U100-19
452: U125-7                                  .A<13>

453: U144-4 U107-16 U125-8                   .A<14>

454: U144-5 U107-19 U125-9                   .A<15>

455: U161-12 U172-10 U159-20 U157-33 U160-20
455: U147-7 U106-2 U105-2 U104-2 U103-2
455: U102-2 U101-2 U99-2 U100-2 U122-9
455: U174-2 U81-2                            .A<1>

456: U32-12 U147-8 U106-3 U105-3 U104-3
456: U103-3 U102-3 U101-3 U99-3 U100-3
456: U122-8 U174-3 U81-3 U133-2              .A<2>

457: U32-14 U106-4 U105-4 U104-4 U103-4
457: U102-4 U101-4 U99-4 U100-4 U122-7
457: U81-5 U83-1 U133-3                      .A<3>

458: U144-34 U127-37 U106-5 U105-5 U104-5
458: U103-5 U102-5 U101-5 U99-5 U100-5
458: U122-6 U44-1                            .A<4>

459: U144-35 U127-38 U106-6 U105-6 U104-6
459: U103-6 U102-6 U101-6 U99-6 U100-6
459: U122-5 U44-2                            .A<5>

460: U144-36 U127-39 U106-7 U105-7 U104-7
460: U103-7 U102-7 U101-7 U99-7 U100-7
460: U122-4 U44-3                            .A<6>

461: U144-37 U127-40 U106-13 U105-13 U104-13
461: U103-13 U102-13 U101-13 U99-13 U100-13
461: U122-3 U44-5                            .A<7>

462: U144-38 U107-2 U106-14 U105-14 U104-14
462: U103-14 U102-14 U101-14 U99-14 U100-14
462: U122-25                                 .A<8>

463: U144-39 U107-5 U106-15 U105-15 U104-15
463: U103-15 U102-15 U101-15 U99-15 U100-15
463: U122-24                                 .A<9>

464: U173-12                                 .AD15
*** Only one pin in net
*** Run Has no outputs

465: U1-34 U2-6                              .ADDR DATA<0>

466: U1-36 U2-7                              .ADDR DATA<1>
```

```
467: U1-38 U2-8                                .ADDR DATA<2>

468: U1-40 U2-9                                .ADDR DATA<3>

469: U1-2 U2-11                                .ADDR DATA<4>

470: U1-4 U2-12                                .ADDR DATA<5>

471: U1-17 U2-13                               .ADDR DATA<6>

472: U1-19 U2-14                               .ADDR DATA<7>

473: U1-21 U24-6                               .ADDR DATA<8>

474: U163-6 U218-3 U217-3 U220-3 U221-3
474: U240-17 U219-3                            .ADDR<0>

475: U149-6 U164-4 U148-2 U218-6 U217-6
475: U220-6 U221-6 U219-6 U240-11              .ADDR<1>

476: U149-4 U164-7 U148-3 U218-4 U217-4
476: U220-4 U221-4 U219-4 U240-13              .ADDR<2>

477: U149-5 U164-9 U148-4 U218-5 U217-5
477: U220-5 U221-5 U219-5 U240-15              .ADDR<3>

478: RN3-3 U12-16 JB2-1                        .B<0>

479: RN3-4 U12-18 JB4-1                        .B<1>

480: RN3-5 U12-3 JB6-1                         .B<2>

481: RN3-6 U12-5 JB8-1                         .B<3>

482: U12-9 JB24-1 RN3-8                        .BA<0>

483: RN3-7 U12-7 JB28-1                        .BA<1>

484: U212-8 U211-17                            .BC INSTR ENB

485: U212-12 U211-16                           .BC INSTR<0>

486: U212-13 U211-15                           .BC INSTR<1>

487: U212-14 U211-14                           .BC INSTR<2>

488: U135-2 U212-20                            .BIT CNT OVFL L

489: U26-6 U34-3 U29-3 U31-3                   .BR<0>

490: U26-7 U34-4 U29-4 U31-4                   .BR<1>
```

491: U26-8 U34-7 U29-7 U31-7 .BR<2>

492: U26-9 U34-8 U29-8 U50-2 U31-8 .BR<3>

493: U26-11 U34-13 U29-13 U31-13 .BR<4>

494: U26-12 U34-14 U29-14 U31-14 .BR<5>

495: U26-13 U34-17 U29-17 U31-17 .BR<6>

496: U26-14 U34-18 U29-18 U31-18 .BR<7>

497: U167-5 U185-5 U170-5 U168-2 .BUF D<0>

498: U167-6 U185-6 U170-6 U168-5 .BUF D<1>

499: U167-7 U185-7 U170-7 U168-6 .BUF D<2>

500: U167-8 U185-8 U170-8 U168-9 .BUF D<3>

501: U152-5 U186-5 U171-5 U168-12 .BUF D<4>

502: U152-6 U186-6 U171-6 U168-15 .BUF D<5>

503: U152-7 U186-7 U171-7 U168-16 .BUF D<6>

504: U152-8 U186-8 U171-8 U168-19 .BUF D<7>

505: U144-23 U82-9 U172-9 U125-11 .BUS ACK L

506: U146-9 U162-13 .BUS CTRL

507: RN3-2 U12-14 JB26-1 .BUS ENB

508: RN8-5 U144-25 U82-6 .BUS RQST L

509: U76-12 U57-17 .BUSY
*** Run Has no outputs

510: U191-6 U176-10 U17-1 .C/P ENB H

511: U69-3 U71-18 U63-10 .CAR SENSE H

512: U91-5 U91-4 U63-9 .CAR SENSE L

513: U35-14 U73-6 .CC L

514: U75-11 U70-11 U73-11 .CC SEL<0>

515: U75-12 U70-10 U73-10 .CC SEL<1>

516: U75-13 U70-9 U73-9 .CC SEL<2>

```
517: U75-14 U94-17 U73-7                .CC SEL<3>

518: U133-11 U142-9 U139-9 U142-16 U139-16
518:                                    .CLK IN H

519: U133-12 U140-16 U140-9 U141-9 U141-16
519:                                    .CLK IN L

520: U133-9 U186-19 U185-1              .CLK OUT H

521: U133-10 U171-19 U170-1             .CLK OUT L

522: U176-9 U65-11 U140-1 U141-19 U139-1
522: U142-19 U228-4 U204-11 U204-13 U92-6
522: U155-1 U154-19 U156-1 U153-19 U183-19
522: U182-19 U184-1 U169-19 U132-9      .CLK-4F

523: J176-1 U228-3 U161-2               .CLK-7R

524: U243-11 U242-11 U204-10 U209-5 U37-11
524: U35-31 U74-3 U69-11 U130-1 U71-11
524: U193-10 U23-13                     .CLKOR

525: U199-9 U195-9 U200-5 U110-11 U149-14
525: U149-13 U148-1 U218-13 U217-13 U218-14
525: U217-14 U220-14 U221-14 U219-14 U219-13
525: U220-13 U221-13 U204-12            .CLKORB

526: U34-6 U18-4                        .CLR CRC H

527: U236-12 U228-11 U162-9 U176-4      .CO<1>

528: U162-10 U176-5 U214-12             .CO<2>

529: U69-17 U63-6                       .COLLISION

530: C156-1 J96-1                       .COLLISION+

531: C157-1 J194-1                      .COLLISION-

532: J39-1 U132-6                       .COM NET INT L

533: U112-2 U117-12 U76-10              .CRC BIT H

534: U112-18 U136-2                     .CRC BIT L

535: U14-9 U19-6                        .CRC BITS

536: U51-9 U17-9                        .CRC CLK ENB H

537: U7-1 U18-13                        .CRC ERR H
```

```
538: U137-18 U116-6                          .CRC ERR<2>

539: U138-18 U116-7                          .CRC ERR<3>

540: U117-16 U116-8                          .CRC ERR<4>

541: U73-13 U116-17                          .CRC ERROR

542: U197-4 U199-10 U200-6                   .D GRANT H

543: U127-3 RN1-9 U125-6                     .D MEM RD L

544: RN1-10 U127-4 U125-5                    .D MEM WR L

545: U7-15 RN6-8 JP2-2 U66-9 U11-2           .D SEL<0>

546: U7-14 RN6-7 JP3-2 U85-4                 .D SEL<1>

547: U48-14 U139-14 U140-14 RN10-2 U144-14
547: U126-11 U127-30 U107-3 U159-8 U158-40
547: U160-8 U157-40 U147-10 U145-6 U46-3
547: U80-3 U168-3 U106-12 U106-8 U122-11
547: U174-13                                 .D<0>

548: U48-13 U139-13 U140-13 RN10-3 U144-15
548: U126-10 U127-29 U107-4 U159-7 U158-1
548: U160-7 U157-1 U147-11 U145-7 U46-5
548: U80-4 U168-4 U105-12 U105-8 U122-12
548:                                         .D<1>

549: U48-12 U139-12 U140-12 RN10-4 U144-12
549: U126-9 U127-28 U107-7 U159-6 U158-39
549: U160-6 U157-39 U147-12 U145-8 U46-7
549: U80-7 U168-7 U104-12 U104-8 U122-13
549:                                         .D<2>

550: U48-11 U139-11 U140-11 RN10-5 U144-8
550: U126-8 U127-27 U107-8 U159-5 U158-2
550: U160-5 U157-2 U147-13 U145-9 U46-9
550: U80-14 U168-8 U103-12 U103-8 U122-15
550:                                         .D<3>

551: U64-14 U142-14 U141-14 RN10-6 U144-7
551: U126-7 U127-26 U107-13 U159-4 U158-38
551: U160-4 U157-38 U147-14 U145-10 U80-17
551: U168-13 U102-12 U102-8 U122-16          .D<4>

552: U64-13 U142-13 U141-13 RN10-7 U144-9
552: U126-6 U127-23 U107-14 U159-3 U158-3
552: U160-3 U157-3 U147-15 U145-11 U80-8
552: U168-14 U101-12 U101-8 U122-17          .D<5>
```

```
553: U64-12 U85-7 U142-12 U141-12 RN10-8
553: U144-10 U126-5 U127-22 U107-17 U159-2
553: U158-37 U160-2 U157-37 U147-16 U145-12
553: U80-13 U168-17 U100-12 U100-8 U122-18
553:                                        .D<6>

554: U64-11 U85-9 U142-11 U141-11 RN10-9
554: U144-13 U126-4 U127-21 U107-18 U159-1
554: U158-4 U160-1 U157-4 U147-17 U145-13
554: U168-18 U99-12 U99-8 U122-19           .D<7>

555: U161-6 U144-30 U127-32                 .DA<0>

556: U161-8 U144-31 U127-33                 .DA<1>

557: U32-8 U144-32 U127-34                  .DA<2>

558: U32-6 U144-33 U127-35                  .DA<3>

559: U14-12 U38-5 U39-13 U223-7 U245-7
559: U244-7 U224-7                          .DATA INTO FIFO

560: U121-8 U120-8 U94-12 U115-11           .DELAYED GATED PACKE

561: RN6-2 U15-14 JA34-1                    .DIR L

562: U1-14 U7-6                             .DISK CC L

563: U9-12 U84-11                           .DISK INT ENB

564: U84-8 J179-1                           .DISK INT L

565: U195-6 U68-17                          .DISK RQST H

566: U213-14 U68-15                         .DISK WR H

567: U68-4 U31-15                           .DISK WR OP H

568: U131-3 U128-12 U127-15                 .DMA ACK L

569: U83-13 U133-15 U123-2 U162-12          .DMA FIFO L

570: U146-6 U186-2                          .DMA IR

571: U146-5 U142-17                         .DMA OR

572: U146-7 U127-16                         .DMA RQST L

573: U158-36 U125-16                        .DP IO RQST L

574: JB18-1 U12-12 RN6-9                    .DRIVE SEL<0>
```

575: U112-14 JB16-1 RN6-10 .DRIVE SEL<1>

576: U30-2 U17-4 U19-14 .DS<0>

577: U30-5 U17-5 U19-2 .DS<1>

578: U47-14 U34-11 .EMIT<1>

579: U47-13 U29-11 U50-3 U27-3 .EMIT<2>

580: U47-12 U31-11 U51-3 .EMIT<3>

581: U47-9 U68-1 U68-19 .EMIT<6>

582: U132-1 U111-9 .ENB BIT CNT H

583: U138-3 U117-3 U116-3 U137-3 U136-3
583: U78-2 U135-6 .ENB CRC BITS H

584: U136-5 U135-1 U135-5 U63-13 .ENB FIFO BITS H

585: U114-9 U155-9 U153-9 .ENB IN FIFO<0> L

586: U114-10 U154-9 U156-9 .ENB IN FIFO<1> L

587: U110-19 U216-14 U115-8 U166-1 U191-4
587: U191-2 .ENB MA H

588: U114-11 U121-17 U120-17 .ENB NET FIFO L

589: U194-5 U132-3 .ENB NET INT H

590: U110-15 U203-6 .ENB PL

591: U181-6 U110-16 .ENB TOP

592: U111-6 U211-1 .ENB USEC CLK H

593: U111-5 U132-4 .ENB USEC INT H

594: U146-14 U128-13 U126-18 U125-13 .END DMA INT

595: U162-2 U128-11 U126-23 U127-36 RN1-2
595: U128-5 .EOP L

596: U138-4 U117-4 U116-4 U137-4 U119-15
596: .ERR CHECK

597: U195-13 J103-1 .EXT A RQST H

598: U213-1 J154-1 .EXT A WR H

599: U193-13 U129-14 .EXT ADDR L

600: J173-1 U195-4 R1-2 .EXT B RQST H

601: U213-2 J174-1 .EXT B WR H

602: U4-5 U9-2 .F<0>

603: U4-11 U9-5 .F<1>

604: U4-14 U9-6 .F<2>

605: U34-9 U58-3 .FA<0>

606: U34-12 U58-6 .FA<1>

607: U34-15 U58-10 .FA<2>

608: U34-16 U58-13 .FA<3>

609: U11-6 JB34-1 RN4-4 .FAULT

610: U29-5 U223-11 U224-11 U244-11 U245-11
610: .FIFO CLR L

611: U30-9 U201-13 .FIFO IN CLK ENB H

612: U30-6 U93-10 .FIFO OUT CLK ENB H

613: U127-25 U145-15 U128-6 .FLOP ACK L

614: RN5-6 U15-11 JA20-1 .FLOP INDEX L

615: U126-21 U145-18 .FLOP INT

616: U46-6 JA46-1 RN5-8 .FLOP RD DATA L

617: RN5-7 U15-13 JA22-1 .FLOP RDY L

618: U127-19 U33-10 .FLOP RQST L

619: U15-1 U131-12 U16-13 .FLOP RW

620: U145-23 U131-6 .FLOP SEP DATA

621: U16-7 U16-1 .FLOP SK

622: U15-4 RN5-4 JA42-1 .FLOP TK<0> L

623: U15-2 RN5-3 JA10-1 .FLOP TWO SIDED L

```
 624: U145-22 U86-2                          .FLOP WINDOW

 625: U16-3 JA38-1                           .FLOP WR DATA L

 626: U16-5 JA40-1                           .FLOP WR ENB L

 627: U16-2 RN5-2 JA44-1                     .FLOP WR PRO L

 628: U172-3 U172-4 U170-18 U171-18 U186-18
 628: U185-18 U140-18 U141-18 U142-18 U139-18
 628:                                        .FLUSH L

 629: U173-11                                .FP CLK L
*** Only one pin in net
*** Run Has no outputs

 630: U76-13 U57-15                          .FP INT
*** Run Has no outputs

 631: U57-11 U33-9                           .FR
*** Run Has no outputs

 632: U33-8                                  .FR L
*** Only one pin in net

 633: U57-13                                 .FS
*** Only one pin in net
*** Run Has no outputs

 634: U201-5 U211-19                         .GATED 1MHZ

 635: U94-6 U93-3                            .GATED PACKET CLK H

 636: U93-11 U132-13                         .GATED PACKET CLK L

 637: U66-5 U93-6 U49-13                     .GATED PLO CLK H

 638: U73-2 U88-9                            .GO H

 639: U127-24 U147-2                         .GPIB ACK L

 640: J42-1 U237-9                           .GPIB ATN

 641: J144-1 U237-7                          .GPIB DAV

 642: J48-1 U238-2                           .GPIB DI<1>

 643: J147-1 U238-3                          .GPIB DI<2>

 644: J47-1 U238-4                           .GPIB DI<3>

 645: J146-1 U238-5                          .GPIB DI<4>
```

646: J38-1 U238-6 .GPIB DI<5>

647: J138-1 U238-7 .GPIB DI<6>

648: J139-1 U238-8 .GPIB DI<7>

649: J41-1 U238-9 .GPIB DI<8>

650: J46-1 U237-8 .GPIB EOI

651: J43-1 U237-4 .GPIB IFC

652: RN1-4 U147-9 .GPIB INT L

653: J143-1 U237-5 .GPIB NDAC

654: J44-1 U237-6 .GPIB NRFD

655: U238-11 U174-9 .GPIB PE

656: U147-5 U125-15 .GPIB RD

657: J141-1 U237-3 .GPIB REN

658: U127-18 U147-1 .GPIB RQST L

659: U237-1 U174-7 .GPIB SC

660: J142-1 U237-10 .GPIB SRQ

661: U199-11 J171-1 U109-18 .GRANT DMA

662: U150-12 U216-13 .HDCAR

663: U15-5 JA18-1 .HEAD LD L

664: J148-1 U216-1 .HOLD OFF L

665: U166-12 U166-5 U128-9 U23-5 U166-10
665: U114-1 U17-2 U161-18 .ICLK-4R

666: U34-2 U30-3 .IDS<0>

667: U34-5 U30-4 .IDS<1>

668: JB10-1 RN4-3 U6-11 .INDEX

669: U129-1 J72-1 U111-1 U194-1 U28-2
669: U13-1 U9-1 .INIT L

670: U126-13 U157-7 .INT ENB

671: U140-5 U242-2 U153-4 U223-3 .IO MDO BUF<0>

672: U139-7 U243-6 U154-6 U244-5 .IO MDO BUF<10>

673: U139-8 U243-9 U154-7 U244-6 .IO MDO BUF<11>

674: U142-5 U243-12 U154-8 U245-3 .IO MDO BUF<12>

675: U142-6 U243-15 U156-4 U245-4 .IO MDO BUF<13>

676: U142-7 U243-16 U156-5 U245-5 .IO MDO BUF<14>

677: U142-8 U243-19 U156-6 U245-6 .IO MDO BUF<15>

678: U140-6 U242-5 U153-5 U223-4 .IO MDO BUF<1>

679: U140-7 U242-6 U153-6 U223-5 .IO MDO BUF<2>

680: U140-8 U242-9 U153-7 U223-6 .IO MDO BUF<3>

681: U141-5 U242-12 U153-8 U224-3 .IO MDO BUF<4>

682: U141-6 U242-15 U155-4 U224-4 .IO MDO BUF<5>

683: U141-7 U242-16 U155-5 U224-5 .IO MDO BUF<6>

684: U141-8 U242-19 U155-6 U224-6 .IO MDO BUF<7>

685: U139-5 U243-2 U154-4 U244-3 .IO MDO BUF<8>

686: U139-6 U243-5 U154-5 U244-4 .IO MDO BUF<9>

687: U197-11 J178-1 U195-1 U109-17 .IO MEM RQST

688: U213-5 J153-1 U109-16 .IO MEM WR

689: U179-15 U115-10 .IO SEL H

690: U150-14 U164-1 U148-8 U236-14 U166-3
690: U234-14 U235-14 U214-14 .IO SEL L

691: U216-10 J69-1 U233-1 U209-1 U230-2
691: U87-2 U196-12 U211-7 .IOA<0>

692: U163-12 U216-11 J169-1 U233-2 U209-2
692: U230-3 U87-5 U196-13 U211-8 .IOA<1>

693: J68-1 U233-3 U209-3 U230-4 U87-11
693: .IOA<2>

694: J168-1 U208-1 U230-5 .IOA<3>

```
695: J67-1 U208-2 U230-6                    .IOA<4>

696: J167-1 U208-4 U230-7                   .IOA<5>

697: J66-1 U208-6 U230-8                    .IOA<6>

698: U232-1 U231-1 J166-1 U208-3 U230-9
698: U211-9                                 .IOA<7>

699: U232-19 U231-19 U230-19                .IOB BUF ENB L

700: U230-1 J71-1 U208-5                    .IOB ENB L

701: U57-9 U165-4 U235-9 U167-14 U65-3
701: U231-2 U129-4 U52-4 U71-2 U212-4
701: U111-3 U196-4 U60-4 U77-15 U13-3
701: U9-3 U11-3                             .IOB<0>

702: U214-8 U232-4 U85-16                   .IOB<10>

703: U214-9 U232-5                          .IOB<11>

704: U235-5 U232-6                          .IOB<12>

705: U235-6 U232-7                          .IOB<13>

706: U235-7 U232-8                          .IOB<14>

707: U57-3 U235-8 U161-3 U232-9             .IOB<15>

708: U57-5 U165-5 U234-5 U167-13 U65-4
708: U231-3 U129-5 U52-6 U71-5 U212-5
708: U111-4 U196-5 U60-6 U77-1 U13-4 U9-4
708: U11-5                                  .IOB<1>

709: U165-12 U236-5 U234-6 U167-12 U65-7
709: U231-4 U129-12 U52-10 U71-6 U212-6
709: U111-7 U196-6 U60-10 U77-10 U13-7
709: U9-7 U11-7                             .IOB<2>

710: U165-13 U236-6 U234-7 U167-11 U65-8
710: U231-5 U129-13 U52-12 U71-9 U212-7
710: U111-8 U196-7 U60-12 U77-9 U13-8
710: U9-8 U85-12                            .IOB<3>

711: U150-5 U148-6 U236-7 U152-14 U65-13
711: U231-6 U53-4 U71-12 U212-16 U111-13
711: U196-16 U59-4 U13-13 U9-13 U11-12
711:                                        .IOB<4>

712: U150-6 U25-3 U236-8 U152-13 U65-14
```

```
712: U231-7 U53-6 U71-15 U212-17 U111-14
712: U196-17 U59-6 U13-14 U9-14 U11-14
712:                                    .IOB<5>

713: U150-7 U25-5 U236-9 U152-12 U65-17
713: U231-8 U53-10 U71-16 U212-18 U111-17
713: U196-18 U59-10 U13-17 U9-17 U11-9
713:                                    .IOB<6>

714: U57-7 U150-8 U25-4 U214-5 U152-11
714: U161-5 U65-18 U231-9 U53-12 U71-19
714: U212-19 U111-18 U196-19 U59-12 U13-18
714: U9-18 U85-14                       .IOB<7>

715: U214-6 U232-2 U88-12 U11-16        .IOB<8>

716: U214-7 U232-3 U11-18               .IOB<9>

717: U152-2 U85-11                      .IOD OUT FIFO

718: U162-5 U161-17 U174-4              .IOD OUT RDY

719: U231-18 J64-1                      .IOD<0>

720: U232-16 J58-1                      .IOD<10>

721: U232-15 J158-1                     .IOD<11>

722: U232-14 J57-1                      .IOD<12>

723: U232-13 J157-1                     .IOD<13>

724: U232-12 J56-1                      .IOD<14>

725: U232-11 J156-1                     .IOD<15>

726: U231-17 J164-1                     .IOD<1>

727: U231-16 J63-1                      .IOD<2>

728: U231-15 J163-1                     .IOD<3>

729: U231-14 J62-1                      .IOD<4>

730: U231-13 J162-1                     .IOD<5>

731: U231-12 J61-1                      .IOD<6>

732: U231-11 J161-1                     .IOD<7>

733: U232-18 J59-1                      .IOD<8>
```

734: U232-17 J159-1 .IOD<9>

735: U35-34 U36-9 U32-11 .J ADDR<0>

736: U35-36 U36-11 U32-13 .J ADDR<1>

737: U35-38 U36-12 U32-15 .J ADDR<2>

738: U35-40 U36-13 U32-17 U57-2 .J ADDR<3>

739: U35-2 U36-14 U55-17 U55-2 .J ADDR<4>

740: U35-4 U75-6 U55-15 U55-4 .J ADDR<5>

741: U35-17 U75-7 U55-13 U55-6 .J ADDR<6>

742: U35-19 U75-8 U55-11 U55-8 .J ADDR<7>

743: U35-21 U75-9 .J ADDR<8>

744: U35-12 U36-6 .J CMD<0>

745: U35-11 U36-7 .J CMD<1>

746: U35-9 U36-8 .J CMD<2>

747: U35-8 U56-14 .J CMD<3>

748: U1-12 U24-11 .JMP<0>

749: U1-11 U24-9 .JMP<1>

750: U1-9 U24-8 .JMP<2>

751: U1-8 U24-7 .JMP<3>

752: RN1-6 J197-1 U157-29 .KBD DATA H

753: U73-12 U69-19 .L MATCH H

754: U118-8 U168-11 .LATCH BUF D

755: U230-17 U176-13 U135-4 U211-4 .LD BIT CNT L

756: U230-22 U9-11 U28-12 .LD D CTRL 1

757: U230-23 U13-11 U25-11 U25-10 U25-9
757: .LD D CTRL 2

758: U230-20 U77-11 .LD DF CNTR L

759: U230-21 U23-12 U58-1 U77-14 .LD DF DATA L

760: U216-12 U115-9 U166-2 U230-16 .LD DMA ADDR L

761: U165-9 U209-15 .LD DMA CHAN L

762: U209-14 .LD FP INST L
*** Only one pin in net

763: U129-9 U209-10 .LD INT ENB L

764: U209-13 U111-11 U88-11 .LD NET CTRL L

765: U92-12 U72-9 U74-11 .LD NET CTRL REG<0>

766: U92-14 U119-9 .LD NET CTRL REG<1>

767: U209-12 U194-3 .LD NET ENB L

768: U94-5 U121-2 U120-2 .LD NET FIFO L

769: U208-14 U87-1 U130-2 .LD NET FILE L

770: U94-9 U183-1 U169-1 .LD OUT FIFO<0> H

771: U94-7 U182-1 U184-19 .LD OUT FIFO<1> H

772: U64-19 U48-1 U209-11 .LD UPROC DATA L

773: U230-18 U193-9 U211-6 .LD USEC CLK L

774: U5-8 U66-12 .LDSR

775: RN6-4 U16-12 JA2-1 .LOW CUR L

776: U130-8 U124-2 U158-8 U157-8 U44-6
776: .M1 L

777: J54-1 U191-3 .MA EXT A

778: U176-8 U239-19 U239-1 U241-19 U241-1
778: U240-1 .MA OUT L

779: J31-1 U240-16 U240-5 .MADDR<10>

780: U240-18 J131-1 U240-3 .MADDR<11>

781: J29-1 U241-12 .MADDR<12>

782: U241-14 J129-1 .MADDR<13>

783: U241-16 J28-1 .MADDR<14>

784: U241-18 J128-1 .MADDR<15>

785: U241-3 J27-1 .MADDR<16>

786: U241-5 J127-1 .MADDR<17>

787: U241-7 J26-1 .MADDR<18>

788: J126-1 U241-9 .MADDR<19>

789: U239-5 J36-1 .MADDR<2>

790: U239-3 J136-1 .MADDR<3>

791: U239-18 J34-1 .MADDR<4>

792: U239-16 J134-1 .MADDR<5>

793: U239-14 J33-1 .MADDR<6>

794: U239-12 J133-1 .MADDR<7>

795: J32-1 U240-12 U240-9 .MADDR<8>

796: J132-1 U240-14 U240-7 .MADDR<9>

797: U7-3 U90-2 U27-12 .MATCH H

798: U170-14 U169-15 J14-1 U223-21 .MDI<0>

799: U185-12 U184-13 J8-1 U244-19 .MDI<10>

800: U185-11 U184-12 J108-1 U244-18 .MDI<11>

801: U186-14 U184-11 J7-1 U245-21 .MDI<12>

802: U186-13 U182-15 J107-1 U245-20 .MDI<13>

803: U186-12 U182-14 J6-1 U245-19 .MDI<14>

804: U186-11 U182-13 J106-1 U245-18 .MDI<15>

805: U170-13 U169-14 J114-1 U223-20 .MDI<1>

806: U170-12 U169-13 J13-1 U223-19 .MDI<2>

807: U170-11 U169-12 J113-1 U223-18 .MDI<3>

808: U171-14 U169-11 J12-1 U224-21 .MDI<4>

809: U171-13 U183-15 J112-1 U224-20 .MDI<5>

```
810: U171-12 U183-14 J11-1 U224-19        .MDI<6>
811: U171-11 U183-13 J111-1 U224-18       .MDI<7>
812: U185-14 U184-15 J9-1 U244-21         .MDI<8>
813: U185-13 U184-14 J109-1 U244-20       .MDI<9>
814: U242-3 J24-1                         .MDO<0>
815: J18-1 U243-7                         .MDO<10>
816: J118-1 U243-8                        .MDO<11>
817: J17-1 U243-13                        .MDO<12>
818: J117-1 U243-14                       .MDO<13>
819: J16-1 U243-17                        .MDO<14>
820: J116-1 U243-18                       .MDO<15>
821: U242-4 J124-1                        .MDO<1>
822: U242-7 J23-1                         .MDO<2>
823: U242-8 J123-1                        .MDO<3>
824: U242-13 J22-1                        .MDO<4>
825: U242-14 J122-1                       .MDO<5>
826: U242-17 J21-1                        .MDO<6>
827: U242-18 J121-1                       .MDO<7>
828: J19-1 U243-3                         .MDO<8>
829: J119-1 U243-4                        .MDO<9>
830: U145-26 U131-1 U175-10               .MFM
831: U92-15 U112-11                       .NET DMA RQST L
832: U69-8 U120-10 U120-1 U121-10         .NET FIFO IR
833: U69-7 U121-23 U191-9 U113-1 U121-14
833:                                      .NET FIFO OR
834: U72-15 U112-17 U132-2                .NET INT H
835: U112-3 U88-13                        .NET INT L
```

```
 836: U73-14 U69-18 U76-3                    .NET MATCH H

 837: R2-2 U191-12 U199-14 U177-17           .NET RQST H

 838: U199-13 U177-15                        .NET WR H

 839: R19-1 J78-1 U229-5 U229-9 U229-6
 839: U229-11                                .NET XMIT+
*** Run has multiple outputs

 840: R20-1 J79-1 U229-2 U229-15 U229-14
 840: U229-3                                 .NET XMIT-
*** Run has multiple outputs

 841: U56-6 U92-4                            .O SEL ENB

 842: U133-14 U123-14                        .ODD

 843: U66-2 U11-11 JB22-1 RN4-6              .ON CYLINDER

 844: RN8-6 U144-20 U157-36 U125-4 U44-4
 844:                                        .P IO RQST L

 845: RN8-7 U144-19 U124-4 U125-3            .P MEM RQST L

 846: U28-1 U9-9                             .P RESET L

 847: U144-22 RN8-9 U130-5 U130-4 U127-2
 847:                                        .P WR L

 848: U95-9 U93-1 U79-3 U135-3               .PACKET CLK H

 849: U95-12 U93-12 U79-11 U78-1             .PACKET CLK L

 850: U121-7 U120-7 U76-9 U95-7 U79-12
 850: U78-9                                  .PACKET DATA H

 851: U218-16 U214-19                        .PALR7

 852: U64-17 U128-3 U126-19                  .PERQ INT

 853: U148-9 U150-15                         .PHDCAR

 854: U69-13 U79-6 U93-13 U93-2 U71-17
 854:                                        .PIP H

 855: U128-10 U223-2 U224-2 U244-2 U245-2
 855:                                        .PL DISK

 856: J104-1 U204-6                          .PL EXT A
```

```
857: J74-1 U228-6                          .PL EXT B

858: U204-4 U155-19 U154-1 U156-19 U153-1
858:                                       .PL NET

859: U204-8 U142-1 U139-19 U141-1 U140-19
859:                                       .PL UPROC

860: U14-11 U51-11 U8-11 U8-3 U14-3 U93-4
860: U49-1 U90-11 U134-11 U93-9 U201-12
860:                                       .PLO CLK H

861: U38-8 U28-10 U40-7 U17-10 U90-10
861:                                       .PLO CLK L

862: U27-9 U49-3                          .PREMATCH H

863: U66-4 U66-13 U49-9                    .PROC CLK H

864: U6-3 U3-11 U1-31 U30-1 U49-7          .PROC CLK L

865: U122-20 U125-17                       .PROM CS L

866: U173-13 U173-10 U152-19 U167-19 U64-1
866: U48-19 U124-10 U124-12 RN2-2 U124-1
866: U158-6 U159-14 U159-11 U159-16 U81-6
866: U209-6 U233-6 U134-13 U134-10         .PU1

867: RN2-4 U123-10 U123-3 U118-10 U118-4
867: U118-1 U118-13 U194-12 U194-10 U123-7
867: U170-19 U171-1 U186-1 U185-19 U143-6
867: U207-12 U207-5 U207-10                .PU3

868: U213-3 U199-1 RN2-5 U180-1 U178-1
868: U165-1 U150-9 U150-4 U215-1           .PU4

869: U6-4 RN2-6 U1-32 U1-15 U47-6 U7-2
869: U28-9 U27-10 U40-9 U27-13 U14-13
869: U14-10 U38-9 U51-10 U51-13 U14-1
869: U14-4 U18-2 U50-12 U27-4 U50-10 U49-10
869: U49-12 U49-11 U202-13 U6-10 U6-13
869: U88-4 U67-4 U67-10 U51-4 U67-2 U88-2
869: U67-12                                .PU5

870: U74-1 U35-15 U35-32 U73-4 U87-14
870: U177-19 U76-2 U113-15 U113-2 U137-7
870: U138-7 U215-12 U215-10 RN2-7 U202-4
870: U202-2 U198-14 U198-12 U113-14 U113-10
870: U134-2 U134-4 U74-10 U119-1 U79-13
870: U79-10 U212-15 U196-15                .PU6

871: U76-5 U198-4 U135-10 U88-10 RN2-8
```

```
871: U63-5 U63-11 U63-3                 .PU7

872: U214-3 U240-4 U219-10              .R<10>

873: U214-4 U240-2 U219-11              .R<11>

874: U235-11 U220-7 U241-8              .R<12>

875: U235-1 U220-8 U241-6               .R<13>

876: U235-2 U220-10 U241-4              .R<14>

877: U235-3 U220-11 U241-2              .R<15>

878: U235-4 U221-7 U241-17              .R<16>

879: U234-11 U221-8 U241-15             .R<17>

880: U234-1 U221-10 U241-13             .R<18>

881: U234-2 U221-11 U241-11             .R<19>

882: U239-15 U236-11 U217-10            .R<2>

883: U239-17 U236-1 U217-11             .R<3>

884: U239-2 U218-7 U236-2               .R<4>

885: U239-4 U218-8 U236-3               .R<5>

886: U239-6 U218-10 U236-4              .R<6>

887: U239-8 U218-11 U214-11             .R<7>

888: U214-1 U240-8 U219-7               .R<8>

889: U214-2 U240-6 U219-8               .R<9>

890: U197-5 U199-2 U178-4 U200-1 U179-2
890:                                    .RA<1>

891: U197-6 U199-5 U178-5 U200-2 U179-5
891:                                    .RA<2>

892: U197-7 U199-7 U178-12 U200-3 U179-11
892:                                    .RA<3>

893: U106-11 U105-11 U104-11 U103-11 U102-11
893: U101-11 U99-11 U100-11 U125-18     .RAM CS L

894: U106-9 U105-9 U104-9 U103-9 U102-9
894: U101-9 U99-9 U100-9 U125-19        .RAM WE L
```

```
895: U70-12 U111-16                          .RCV ALL

896: U134-6 U95-11                           .RCV CLK H

897: U134-5 U113-13 U95-14                   .RCV CLK L

898: R21-2 U206-11 U63-4                     .RCV COLLISION

899: U113-7 U95-5                            .RCV DATA

900: U226-11 R23-2 U94-2 U113-11 U202-3
900: U198-13 U63-12                          .RCV DATA OUT

901: U176-3 U42-1                            .RCV EDGE DET

902: U215-9 U96-1                            .RCV FLOP

903: J89-1 C140-2                            .RCV+

904: J91-1 C154-2                            .RCV-

905: U230-14 U212-9 U211-3                   .RD BIT CNT L

906: JB48-1 U8-6 R32-2                       .RD DATA +

907: U8-7 JB49-1 R32-1                       .RD DATA -

908: U38-2 U38-1 U8-5                        .RD DATA H

909: U233-12 U11-1 U11-19 U85-1 U67-13
909: U67-1 U51-1 U88-1                       .RD DISK STAT L

910: U233-14                                 .RD FP RESULT L
*** Only one pin in net

911: U57-19 U233-15                          .RD FP STAT L

912: JB36-1 U32-16 RN6-6                     .RD GATE

913: U146-11 RN8-8 U144-21 U126-3 U127-1
913: U159-22 U158-32 U160-22 U157-32 U145-2
913: U23-2 U125-2                            .RD L

914: U233-13 U72-1 U71-1                     .RD NET STAT L

915: U152-16 U167-16 U152-9 U167-9 U126-20
915: U233-11                                 .RD UPROC DATA L

916: U161-19 U233-10                         .RD UPROC STAT L

917: U230-15 U196-9 U211-5                   .RD USEC CLK L
```

```
918: U6-1 U3-1 U28-3 U68-18 U29-1 U28-13
918: U49-15 U50-4 U28-4 U49-14          .RESET D L

919: U138-5 U117-5 U116-5 U137-5 U112-15
919: U119-5                             .RESET FIFO & CRC H

920: U155-18 U154-18 U156-18 U153-18 U177-18
920: U169-18 U183-18 U182-18 U184-18 U121-11
920: U120-11 U112-5 U176-12 U211-2      .RESET FIFO & CRC L

921: U127-13 U145-1 U129-11             .RESET H

922: U172-2 U152-18 U167-18 U64-18 U48-18
922: U144-26 U158-21 U157-21 U147-19 U80-1
922: U129-10 U174-15                    .RESET L

923: U92-5 U91-9 U91-10 U78-4 U112-16
923:                                    .RESET NET H

924: U74-4 U37-1 U111-15 U112-4         .RESET NET L

925: J87-1 U190-4                       .RS232 CD A

926: U205-4 J193-1                      .RS232 CD B

927: J86-1 U190-1                       .RS232 CTS A

928: U205-1 J192-1                      .RS232 CTS B

929: U207-8 J82-1                       .RS232 DTR A

930: J188-1 U189-8                      .RS232 DTR B

931: J182-1 U190-13                     .RS232 RC IN A

932: U205-13 J196-1                     .RS232 RC IN B

933: J84-1 U190-10                      .RS232 RD A

934: U205-10 J191-1                     .RS232 RD B

935: U143-13 U143-12 U158-10            .RS232 RQST L

936: U207-6 J184-1                      .RS232 RTS A

937: J189-1 U189-6                      .RS232 RTS B

938: U188-10 J83-1                      .RS232 TC IN A

939: U188-13 J186-1                     .RS232 TC IN B
```

940: U207-11 J181-1 .RS232 TC OUT A

941: J187-1 U189-11 .RS232 TC OUT B

942: U207-3 J183-1 .RS232 TD A

943: J88-1 U189-3 .RS232 TD B

944: U110-12 U109-5 U179-1 .RW

945: U180-9 U114-5 .S CLK 1

946: U178-9 U23-6 U114-6 U228-9 .S CLK 3
*** Run has multiple outputs

947: JB14-1 RN4-2 U134-12 .SECTOR CLK

948: U33-13 U11-8 JB32-1 RN4-5 .SEEK ERR

949: U80-11 U81-9 .SEL CLK CTRL L

950: U23-1 U23-10 U81-7 .SEL CLK DATA L

951: U159-21 U133-4 .SEL CTC A L

952: U160-21 U133-5 .SEL CTC B L

953: U172-1 U81-11 .SEL DMA FLUSH L

954: U127-11 U44-12 .SEL DMA L

955: U83-5 U81-12 .SEL DMA START L

956: U145-4 U44-13 .SEL FLOPPY L

957: U147-3 U44-15 .SEL GPIB L

958: U126-1 U44-9 .SEL INT L

959: U64-16 U48-16 U124-13 U64-9 U48-9
959: U81-15 .SEL IOD RD L

960: U85-19 U81-13 .SEL IOD STAT L

961: U83-12 U152-1 U167-1 U81-14 .SEL IOD WR L

962: U172-13 U44-14 .SEL SIO A L

963: U157-35 U44-11 .SEL SIO B L

964: U173-4 U196-8 U211-12 .SEL USEC CLK L

965: U15-3 JA14-1 .SIDE SEL L

966: U127-14 U172-12 U143-14 .SIO ACK L

967: U158-7 U157-6 .SIO INT ENB

968: U127-17 U143-9 .SIO RQST L

969: U37-2 U75-1 U36-1 U56-1 .SM ADDR<0>

970: U37-5 U75-2 U36-2 U56-2 .SM ADDR<1>

971: U37-6 U75-3 U36-3 U56-3 .SM ADDR<2>

972: U37-9 U75-4 U36-4 U56-4 .SM ADDR<3>

973: U37-12 U75-5 U36-5 U56-5 .SM ADDR<4>

974: U37-15 U75-16 U36-16 U56-16 .SM ADDR<5>

975: U37-16 U75-17 U36-17 U56-17 .SM ADDR<6>

976: U37-19 U75-18 U36-18 U56-18 .SM ADDR<7>

977: U74-5 U75-19 U36-19 U56-19 .SM ADDR<8>

978: U4-7 U3-3 U25-1 U25-2 .SMA<0>

979: U4-9 U3-4 U25-13 .SMA<1>

980: U3-2 U26-1 U5-1 U24-1 U2-1 .SMD ADDR<0>

981: U3-5 U26-2 U5-2 U24-2 U2-2 .SMD ADDR<1>

982: U3-6 U26-3 U5-3 U24-3 U2-3 .SMD ADDR<2>

983: U3-9 U26-4 U5-4 U24-4 U2-4 .SMD ADDR<3>

984: U3-12 U26-5 U5-5 U24-5 U2-5 .SMD ADDR<4>

985: U3-15 U26-16 U5-16 U24-16 U2-16 .SMD ADDR<5>

986: U3-16 U26-17 U5-17 U24-17 U2-17 .SMD ADDR<6>

987: U3-19 U26-18 U5-18 U24-18 U2-18 .SMD ADDR<7>

988: U6-5 U5-19 U24-19 U2-19 U26-19 .SMD ADDR<8>

989: U158-26 U187-13 .SPEAK DATA IN

990: C126-2 J81-1 .SPEAKER

```
 991: U112-12 U187-14                    .SPEECH CLK

 992: U143-11 U143-10 U158-30            .SPEECH RQST L

 993: U143-2 U174-5                      .SPEECH SEL L

 994: U115-12 U119-2                     .STEP CRC H

 995: RN6-3 U15-12 JA36-1                .STEP L

 996: U40-13 U19-4 U19-12                .SYNC BITS

 997: U79-2 U78-12                       .SYNC L

 998: U7-12 U9-15                        .T BIT

 999: U7-13 U9-19                        .T2 BIT

1000: R5-1 J92-1 C103-1                  .TABLET CLK

1001: R4-2 U112-13 J93-1                 .TABLET DATA L

1002: U192-12                            .TC IN B
*** Only one pin in net
*** Run Has no outputs

1003: U80-18 U23-8                       .TESTCLK

1004: U166-6 U223-17 U224-17 U244-17 U245-17
1004: U223-13 U224-13 U244-13 U245-13    .TOP DISK

1005: U181-12 J4-1                       .TOP EXT A L

1006: J73-1 U181-13                      .TOP EXT B L

1007: U166-8 U169-9 U183-9 U182-9 U184-9
1007: U169-16 U183-16 U182-16 U184-16    .TOP NET

1008: U166-11 U186-16 U185-16 U171-16 U170-16
1008: U170-9 U171-9 U186-9 U185-9        .TOP UPROC

1009: U73-1 U111-12                      .TRANSMIT H

1010: U118-3 U118-11 U124-11 U46-16 U124-3
1010: U127-12 U159-18 U159-15 U159-9 U160-18
1010: U160-15 U160-9 U147-18             .TZ CLK

1011: U90-3 JB12-1 RN4-7 U85-6 U67-11    .UNIT READY

1012: U16-9 JA26-1                       .UNIT SEL L

1013: U200-10 U68-16                     .UNLD DISK RQST L
```

```
1014: U200-12 J137-1 U193-12              .UNLD EXT A RQST L

1015: U200-13 J37-1                       .UNLD EXT B RQST L

1016: U92-11 U155-16 U154-16 U156-16 U153-16
1016:                                     .UNLD IN FIFO L

1017: U92-13 U121-13 U120-13              .UNLD NET FIFO L

1018: U201-3 U177-16                      .UNLD NET RQST L

1019: U200-9 U194-13                      .UNLD UPROC RQST L

1020: U162-4 U129-2                       .UPROC ENB

1021: U162-6 J53-1                        .UPROC INT L

1022: U161-15 U128-1 U85-13 U83-9         .UPROC RDY

1023: U83-10 U129-7                       .UPROC RDY ENB

1024: U83-8 J172-1                        .UPROC RDY INT L

1025: U195-3 U194-9                       .UPROC RQST H

1026: U213-13 U133-13 U146-1 U174-6       .UPROC WR H

1027: U71-14 U173-6 U132-5                .USEC CLK OVFL H

1028: U196-14 U211-18                     .USEC I<2>

1029: U181-1 U180-4 U178-2 U179-3         .WA<1>

1030: U181-2 U180-5 U178-7 U179-6         .WA<2>

1031: U181-3 U180-12 U178-10 U179-10      .WA<3>

1032: U79-4 U119-10                       .WAIT FOR SYNC H

1033: U5-11 U27-2                         .WAIT H

1034: U145-21 U175-13 U228-13             .WCLK

1035: U149-15 U216-2                      .WCNT L

1036: U216-4 U221-15                      .WHI L

1037: U218-15 U217-15 U216-3 U220-15 U219-15
1037:                                     .WLO L

1038: U8-10 JB46-1 U8-2 JB42-1            .WR CLK +
```

```
1039: U8-9 JB45-1 U8-1 JB43-1                .WR CLK -

1040: U40-1 U224-22 U244-22 U245-22 U223-22
1040:                                        .WR DATA

1041: JB39-1 U10-3 U10-4                     .WR DATA +

1042: JB40-1 U10-1 U10-2                     .WR DATA -

1043: JB30-1 U32-18 RN6-5                    .WR GATE

1044: U146-10 U130-6 U126-2 U159-23 U160-23
1044: U147-4 U145-3 U125-1 U23-9             .WR L

1045: U148-5 U216-5                          .WREG L

1046: U114-12 U55-1 U57-1                    .X CONST ENB L

1047: U73-15 U57-12 U154-15 U153-15 U177-4
1047: U184-4 U169-4 U121-21 U54-3 U121-3
1047: U72-3 U119-3                           .X MUX<0>

1048: U57-14 U154-14 U153-14 U169-5 U184-5
1048: U121-20 U54-5 U121-4 U72-4 U119-4
1048:                                        .X MUX<1>

1049: U57-16 U154-13 U153-13 U169-6 U184-6
1049: U121-19 U54-7 U121-5 U72-6 U119-6
1049:                                        .X MUX<2>

1050: U57-18 U154-12 U153-12 U169-7 U184-7
1050: U121-18 U54-9 U121-6 U72-11 U119-11
1050:                                        .X MUX<3>

1051: U55-18 U154-11 U153-11 U169-8 U184-8
1051: U54-12 U120-21 U120-3 U72-13 U119-13
1051:                                        .X MUX<4>

1052: U55-16 U156-15 U155-15 U183-4 U182-4
1052: U54-14 U120-20 U120-4 U72-14 U119-14
1052:                                        .X MUX<5>

1053: U55-14 U156-14 U155-14 U183-5 U182-5
1053: U54-16 U120-19 U120-5                  .X MUX<6>

1054: U55-12 U155-13 U156-13 U183-6 U182-6
1054: U54-18 U120-18 U120-6 U74-12           .X MUX<7>

1055: U56-12 U114-14                         .X SEL<0>

1056: U56-13 U114-13                         .X SEL<1>
```

```
1057: R17-2 R18-1 U198-6                    .XMIT BIT STREAM

1058: U95-1 U119-7                          .XMIT CLK SEL H

1059: U74-13 U78-13                         .XMIT DONE L

1060: U121-22 U120-22 U136-4 U95-6          .XMIT FIFO DATA H

1061: U69-14 U121-9 U198-15 U135-13 U74-9
1061: U78-3                                 .XMIT H

1062: U130-12 U74-8                         .XMIT L

1063: U32-9 U52-5 U54-2                     .Y MUX<0>

1064: U32-7 U52-7 U54-4                     .Y MUX<1>

1065: U32-5 U52-9 U54-6                     .Y MUX<2>

1066: U32-3 U52-11 U54-8                    .Y MUX<3>

1067: U55-3 U53-5 U54-11                    .Y MUX<4>

1068: U55-5 U53-7 U54-13                    .Y MUX<5>

1069: U55-7 U53-9 U54-15                    .Y MUX<6>

1070: U55-9 U53-11 U54-17                   .Y MUX<7>

1071: U56-7 U92-1 U87-3                     .Y SEL<0>

1072: U56-8 U92-2 U87-6                     .Y SEL<1>

1073: U56-9 U92-3 U87-10                    .Y SEL<2>

1074: U56-11 U32-19 U55-19 U87-13           .Y SEL<3>

1075: U46-18 U144-6 R3-2 U158-20 U157-20
1075:                                       .Z CLK

1076: RN8-4 U144-16 U126-17 U158-5 U157-5
1076:                                       .Z80 INT L

1077: RN8-2 U144-24 U127-6                  .Z80 WAIT L
```

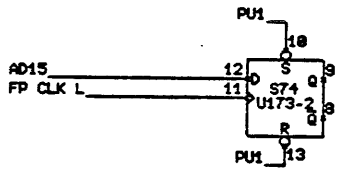

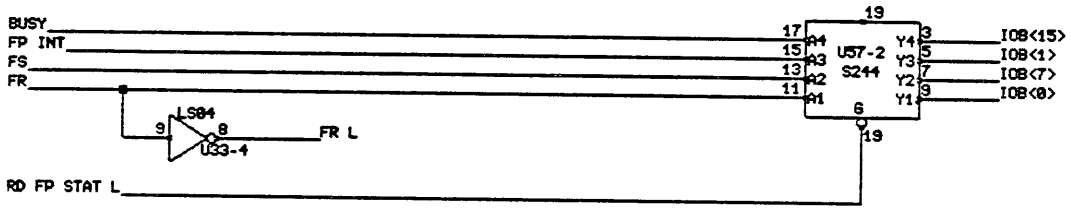

COPYRIGHT (c) 1984

THIS DOCUMENT IS NOT TO BE REPRODUCED IN ANY FORM OR TRANSMITTED IN WHOLE OR IN PART, WITHOUT PRIOR WRITTEN AUTHORIZATION OF PERQ SYSTEMS CORPORATION.

TITLE: FLOATING POINT CONTROL

e01.do

PERQ

DESIGNED	WCH		
DRAWN	13 Sep 82 16:15:01	SBokse	
UPDATED	FEB-23-84	STECK	

SIZE	CODE	IDENTIFICATION	VAR	REV
A	11	8198-	.02	T

PROJ : NON ETHERNET I/O BOARD (NIO)

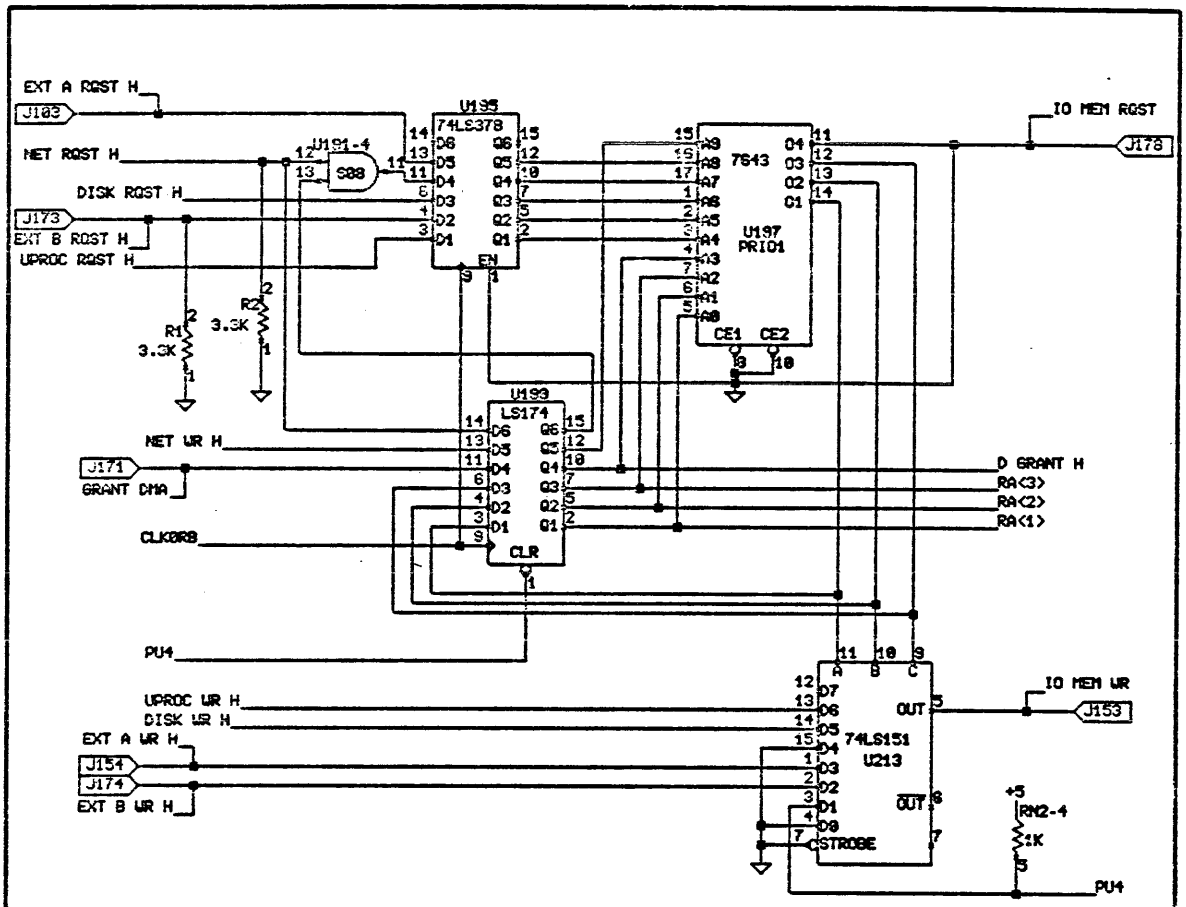

	RA/WA	RWA/ CHANNEL	HDR ADDR	DATA ADDR
<unused>	7	-	-	-
Uproc	6	1	14	15
Disk	5	2	12	13
Net Xmit	4	3	10	11
Ext A	3	4	6	7
Ext B	2	5	4	5
Net Rcv	1	6	2	3
Idle	0	7	/load RAM	

COPYRIGHT (c) 1984

THIS DOCUMENT IS NOT TO BE REPRODUCED IN ANY FORM OR TRANSMITTED IN WHOLE OR IN PART, WITHOUT PRIOR WRITTEN AUTHORIZATION OF PERQ SYSTEMS CORPORATION.

TITLE: DMA PRIORITY ENCODER

e02.db

PERQ

DESIGNED	WCH	
DRAWN	13 Sep 82 15:45:01	SBakse
UPDATED	FEB-23-84	STECK

SIZE	CODE	IDENTIFICATION	VAR	REV
A	11	0198-	02	T

PROJ : NCN ETHERNET I/O BOARD (NIO)

PAGE 2 OF 55

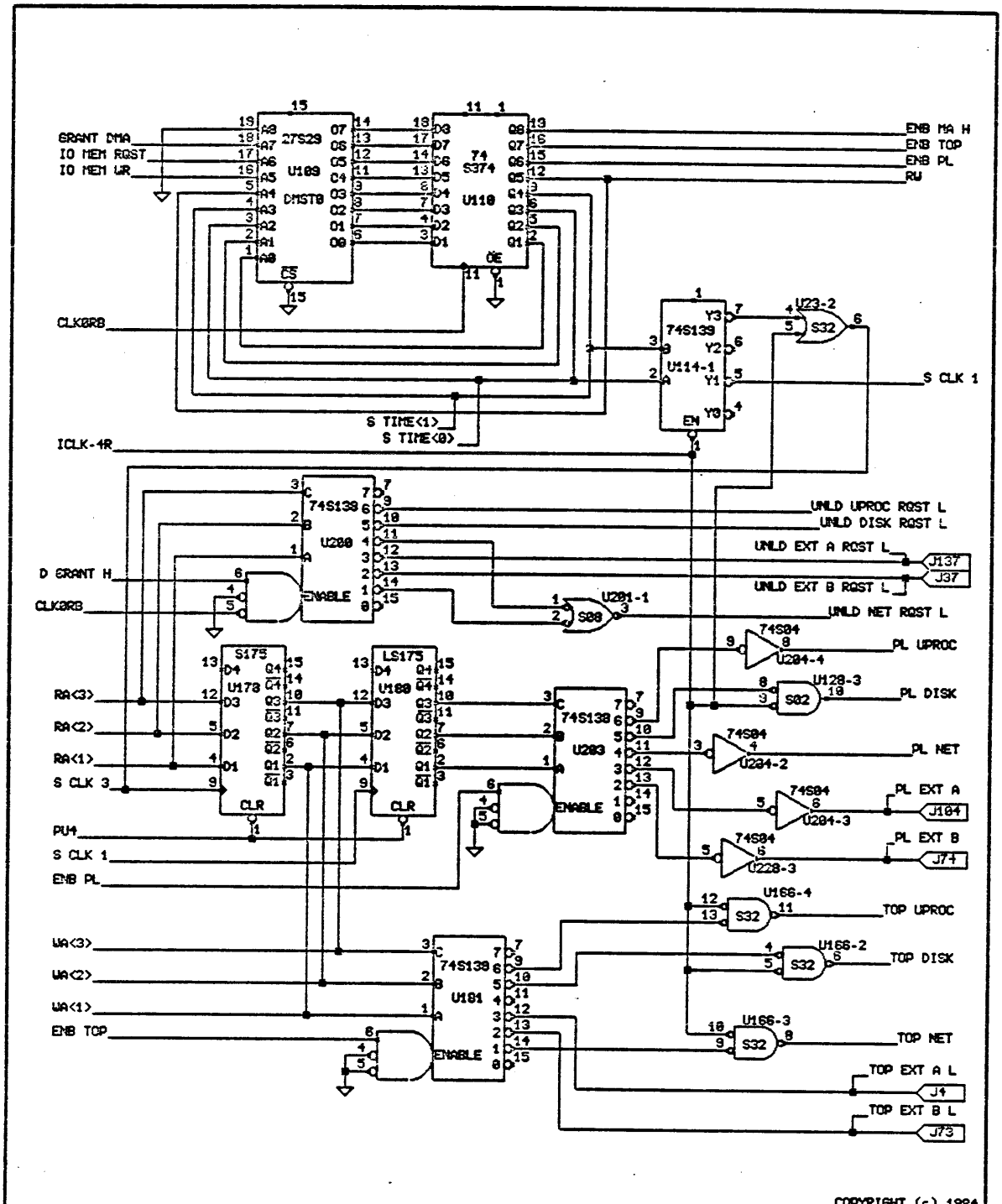

COPYRIGHT (c) 1984

THIS DOCUMENT IS NOT TO BE REPRODUCED IN ANY FORM OR TRANSMITTED IN WHOLE OR IN PART, WITHOUT PRIOR WRITTEN AUTHORIZATION OF PERQ SYSTEMS CORPORATION.

TITLE: DMA STATE MACHINE

e03.db

PERQ

DESIGNED	UCH		SIZE	CODE	IDENTIFICATION	VAR	REV
DRAWN	13 Sep 82 16:45:01	SBakse	A	11	0198-	02	T
UPDATED	FEB-23-84	STECK	PROJ : MAN ETHERNET I/O BOARD (NIO)			PAGE 3	OF 44

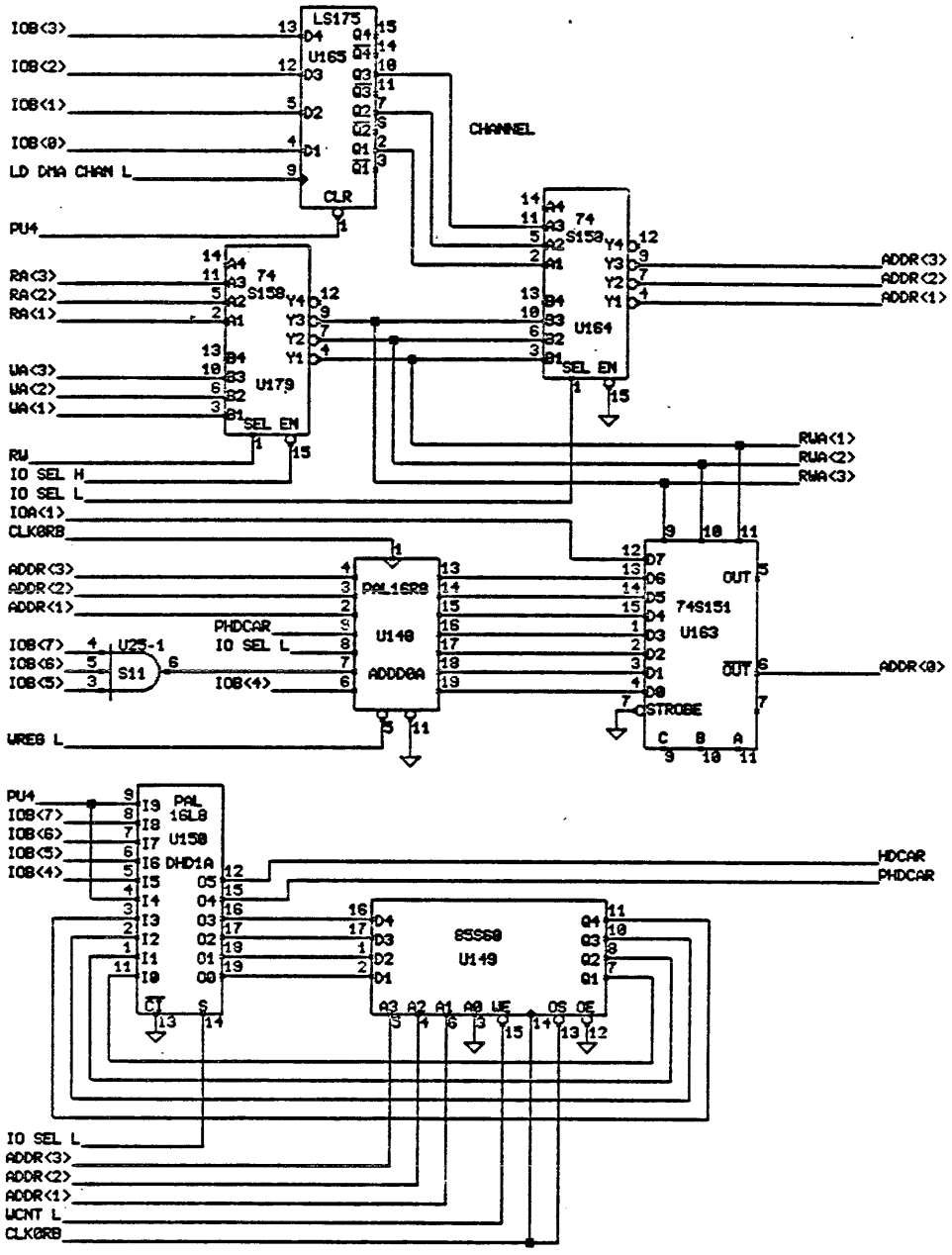

COPYRIGHT (c) 1984

THIS DOCUMENT IS NOT TO BE REPRODUCED IN ANY FORM OR TRANSMITTED IN WHOLE OR IN PART, WITHOUT PRIOR WRITTEN AUTHORIZATION OF PERQ SYSTEMS CORPORATION.

TITLE: RAM ADDRESSING

e04.db

PERQ

DESIGNED	WCH		SIZE	CODE	IDENTIFICATION	VAR	REV
DRAWN	13 Sep 82 15:15:01	SBokse	A	11	0198-	02	Y
UPDATED	30 Jan 85	STECK	PROJ : NCN ETHERNET I/O BOARD (NIO)			PAGE 4	OF 11

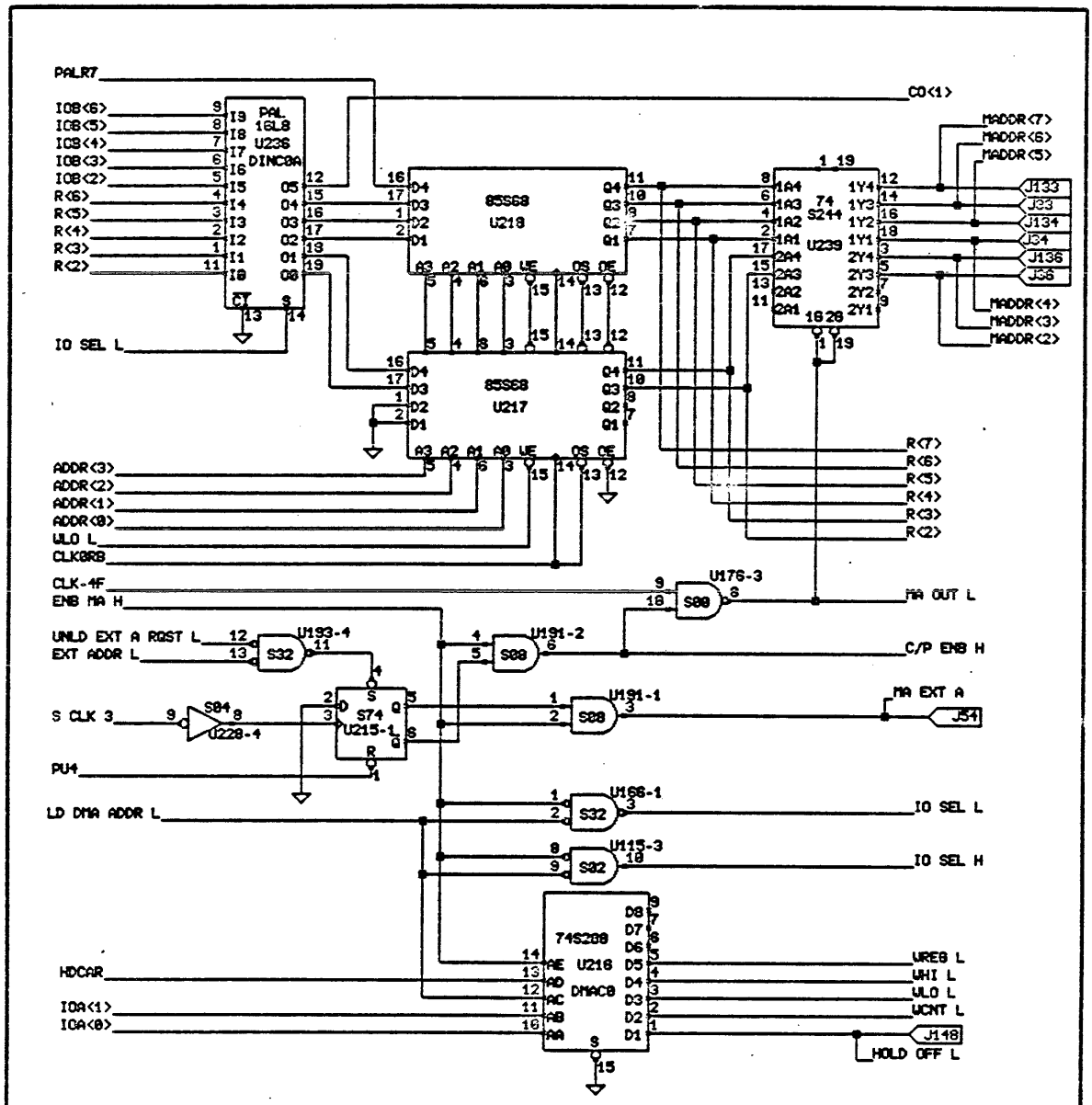

COPYRIGHT (c) 1984

THIS DOCUMENT IS NOT TO BE REPRODUCED IN ANY FORM OR TRANSMITTED IN WHOLE OR IN PART, WITHOUT PRIOR WRITTEN AUTHORIZATION OF PERQ SYSTEMS CORPORATION.

TITLE: DMA ADDRESS RAM

e85.dp

PERQ

DESIGNED	UCH		
DRAWN	13 Sep 82 16:45:31	SBokse	
UPDATED	FEB-23-84	STECK	

SIZE	CODE	IDENTIFICATION	VAR	REV
A	11	0198-	02	Y

PROJ : NON ETHERNET I/O BOARD (NIO)

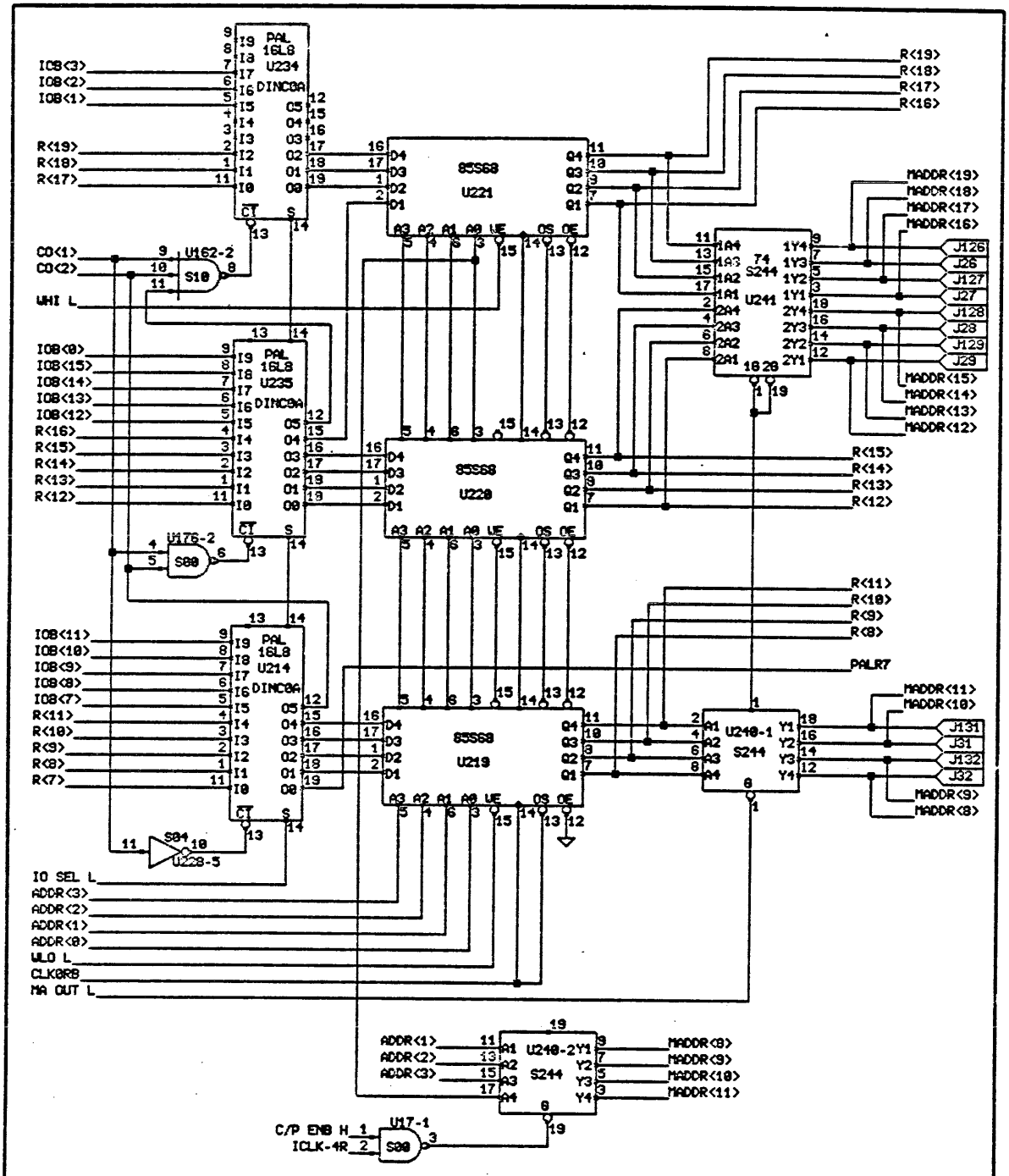

COPYRIGHT (c) 1984

THIS DOCUMENT IS NOT TO BE REPRODUCED IN ANY FORM OR TRANSMITTED IN WHOLE OR IN PART, WITHOUT PRIOR WRITTEN AUTHORIZATION OF PERQ SYSTEMS CORPORATION.

TITLE: DMA ADDRESS RAM

e86.db

PERQ

DESIGNED	WCH	
DRAWN	13 Sep 82 16:45:31	SBokse
UPDATED	FEB-23-84	STECK

SIZE	CODE	IDENTIFICATION	VAR	REV
A	11	0198-	02	Y

PROJ : NON ETHERNET I/O BOARD (NIO)

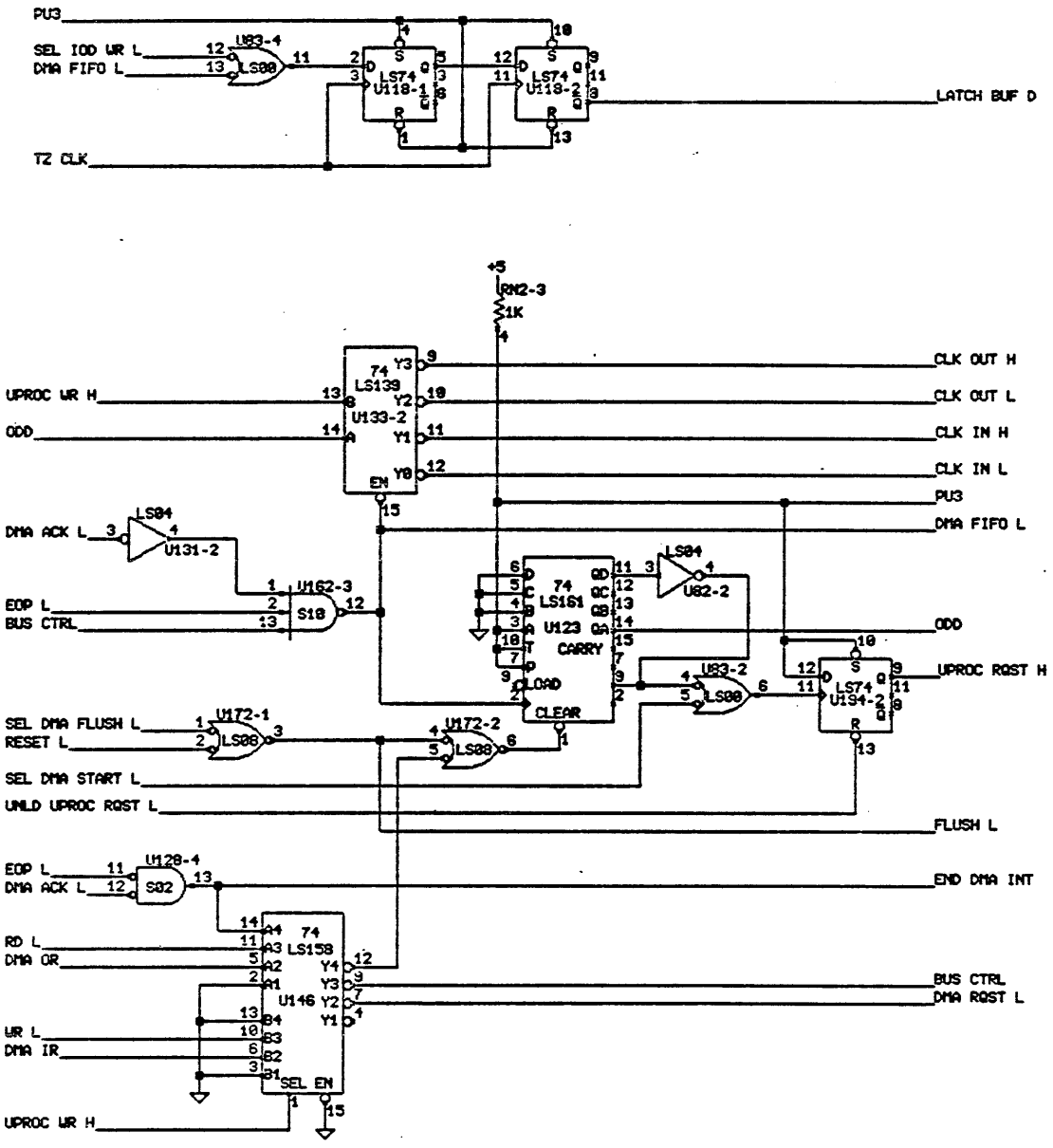

COPYRIGHT (c) 1984

THIS DOCUMENT IS NOT TO BE REPRODUCED IN ANY FORM OR TRANSMITTED IN WHOLE OR IN PART, WITHOUT PRIOR WRITTEN AUTHORIZATION OF PERQ SYSTEMS CORPORATION.

TITLE: UPROC DMA CHANNEL CONTROL

e87.dp

PERQ

DESIGNED	UCH		SIZE	CODE	IDENTIFICATION	VAR	REV
DRAWN	13 Sep 82 15:45:01	SBakse	A	11	8198-	02	T
UPDATED	FEB-23-84	STECK	PROJ : NCN ETHERNET I/O BOARD (NIO)			PAGE 7 OF 44	

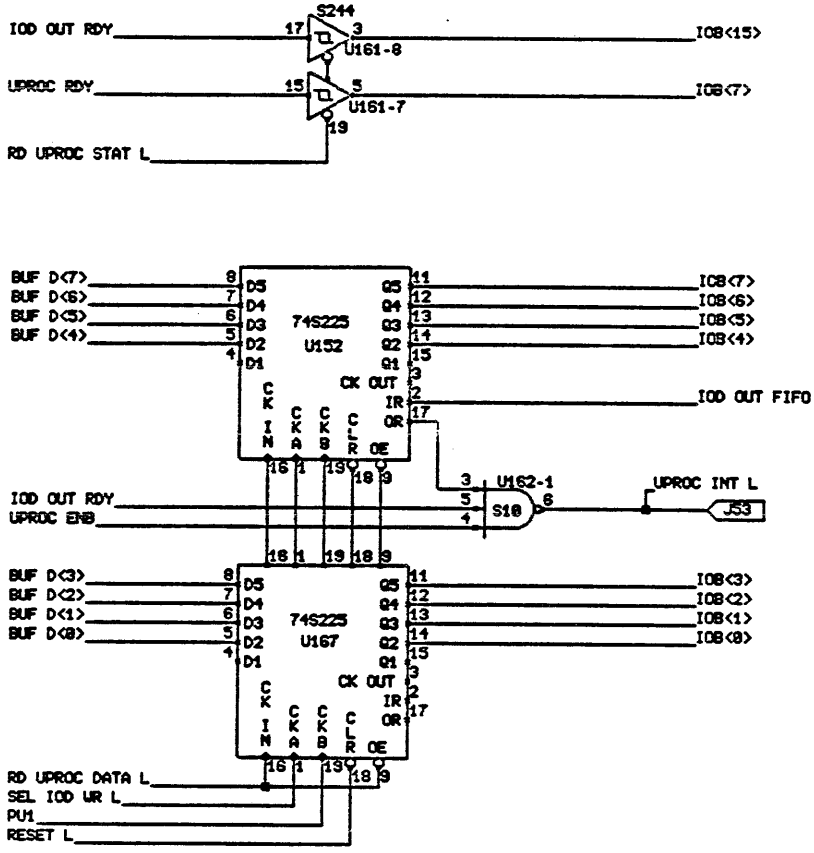

COPYRIGHT (c) 1984

THIS DOCUMENT IS NOT TO BE REPRODUCED IN ANY FORM OR TRANSMITTED IN WHOLE OR IN PART, WITHOUT PRIOR WRITTEN AUTHORIZATION OF PERQ SYSTEMS CORPORATION.

TITLE: Z80 I/O BUS INPUT

e03.dp

PERQ

DESIGNED	UCH		SIZE	CODE	IDENTIFICATION	VAR	REV
DRAWN	13 Sep 82 16:45:31	SBakse	A	11	8198-	02	T
UPDATED	FEB-23-84	STECK	PROJ : NON ETHERNET I/O BOARD (NIO)			PAGE 8 OF 44	

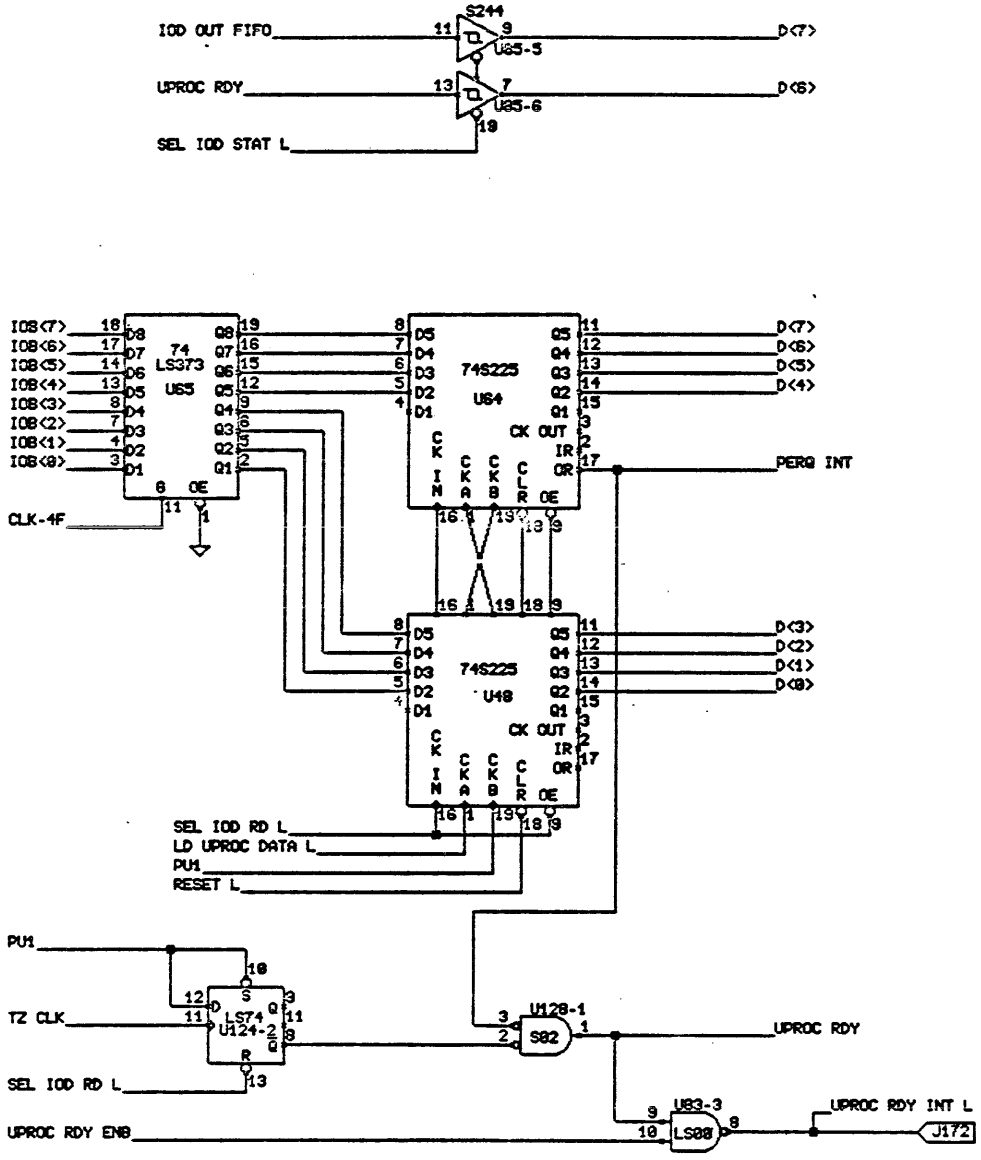

COPYRIGHT (c) 1984

THIS DOCUMENT IS NOT TO BE REPRODUCED IN ANY FORM OR TRANSMITTED IN WHOLE OR IN PART, WITHOUT PRIOR WRITTEN AUTHORIZATION OF PERQ SYSTEMS CORPORATION.

TITLE: Z80 I/O BUS INPUT

e09.db

PERQ

DESIGNED	WCH		SIZE	CODE	IDENTIFICATION	VAR	REV
DRAWN	13 Sep 82 15:15:01	SBckse	A	11	0198-	02	T
UPDATED	FEB-23-84	STECK	PROJ :	NON ETHERNET I/O BOARD (NIO)		PAGE 9	OF 44

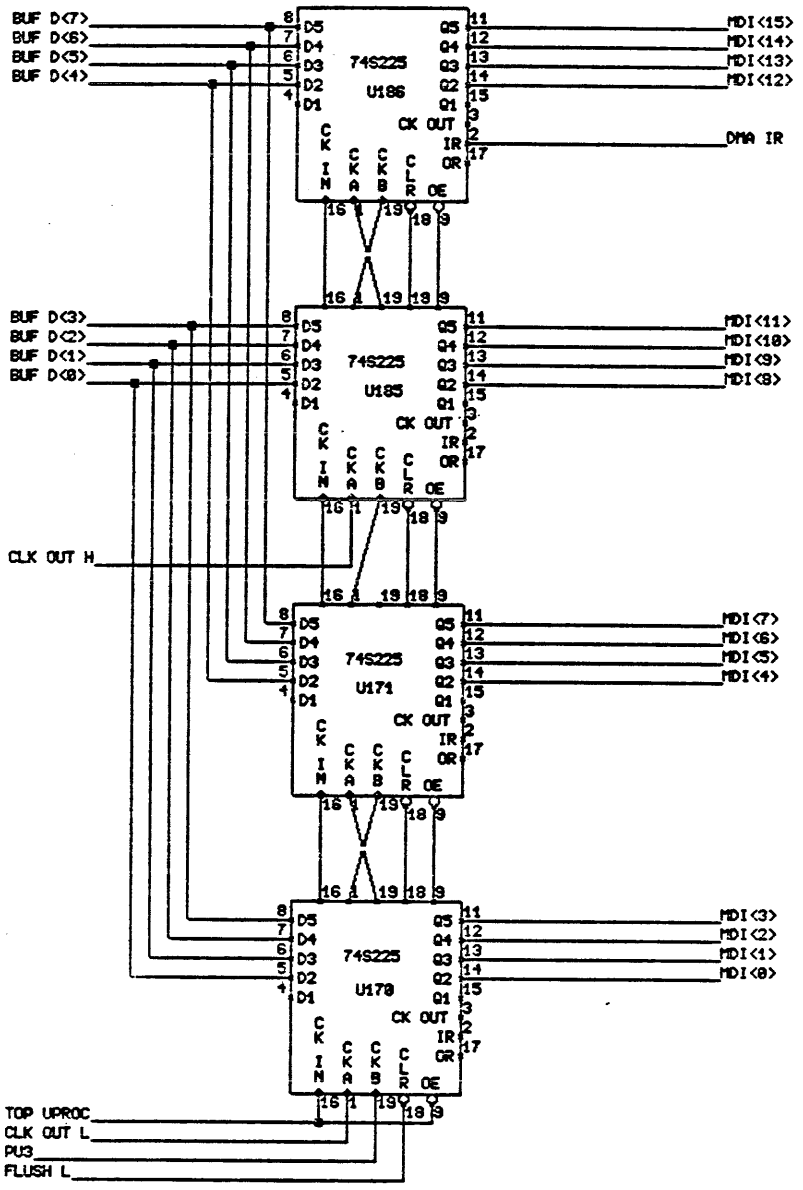

COPYRIGHT (c) 1984

THIS DOCUMENT IS NOT TO BE REPRODUCED IN ANY FORM OR TRANSMITTED IN WHOLE OR IN PART, WITHOUT PRIOR WRITTEN AUTHORIZATION OF PERQ SYSTEMS CORPORATION.

TITLE: Z80 MEMORY BUS OUTPUT

e10.db

PERQ

			SIZE	CODE	IDENTIFICATION	VAR	REV
DESIGNED	UCH		A	11	8198-	02	T
DRAWN	13 Sep 82 16:15:01	SBokse					
UPDATED	FEB-23-84	STECK	PROJ : NON ETHERNET I/O BOARD (MIO)			PAGE 10 OF 44	

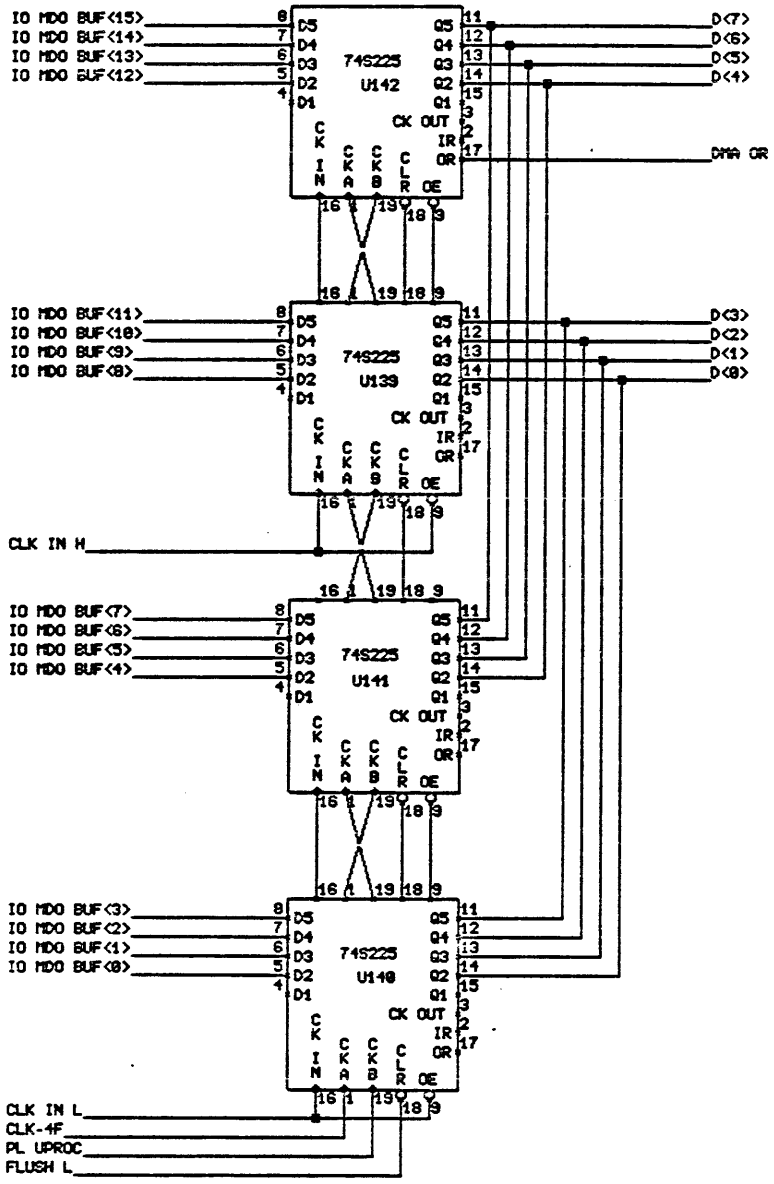

COPYRIGHT (c) 1984

THIS DOCUMENT IS NOT TO BE REPRODUCED IN ANY FORM OR TRANSMITTED IN WHOLE OR IN PART, WITHOUT PRIOR WRITTEN AUTHORIZATION OF PERQ SYSTEMS CORPORATION.

TITLE: Z80 MEMORY BUS INPUT

e11.db

PERQ

DESIGNED	UCH		SIZE	CODE	IDENTIFICATION	VAR	REV
DRAWN	13 Sep 82 16:45:01	SBokse	A	11	0198-	02	T
UPDATED	FEB-23-84	STECK	PROJ :	MON ETHERNET I/O BOARD (MIO)		PAGE 11 OF 44	

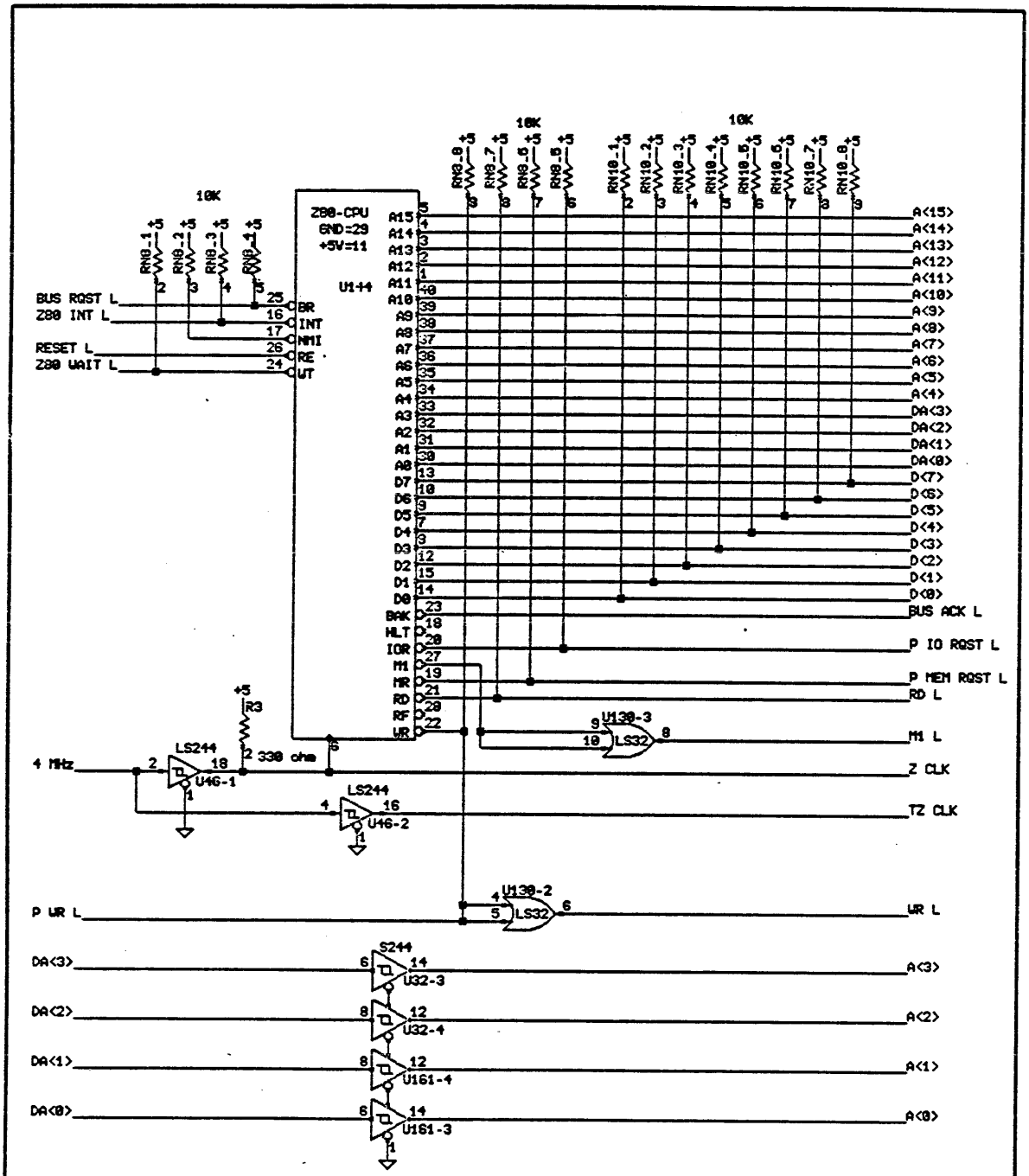

COPYRIGHT (c) 1984

THIS DOCUMENT IS NOT TO BE REPRODUCED IN ANY FORM OR TRANSMITTED IN WHOLE OR IN PART, WITHOUT PRIOR WRITTEN AUTHORIZATION OF PERQ SYSTEMS CORPORATION.

TITLE	Z80 MPU					e12.sp	
PERQ	DESIGNED	UCH		SIZE	CODE	IDENTIFICATION	VAR	REV
	DRAWN	13 Sep 82 16:45:01	SSokse	A	11	0198-	02	T
	UPDATED	FEB-23-84	STECK	PROJ :	NON ETHERNET I/O BOARD (NIO)		PAGE 12	OF 44

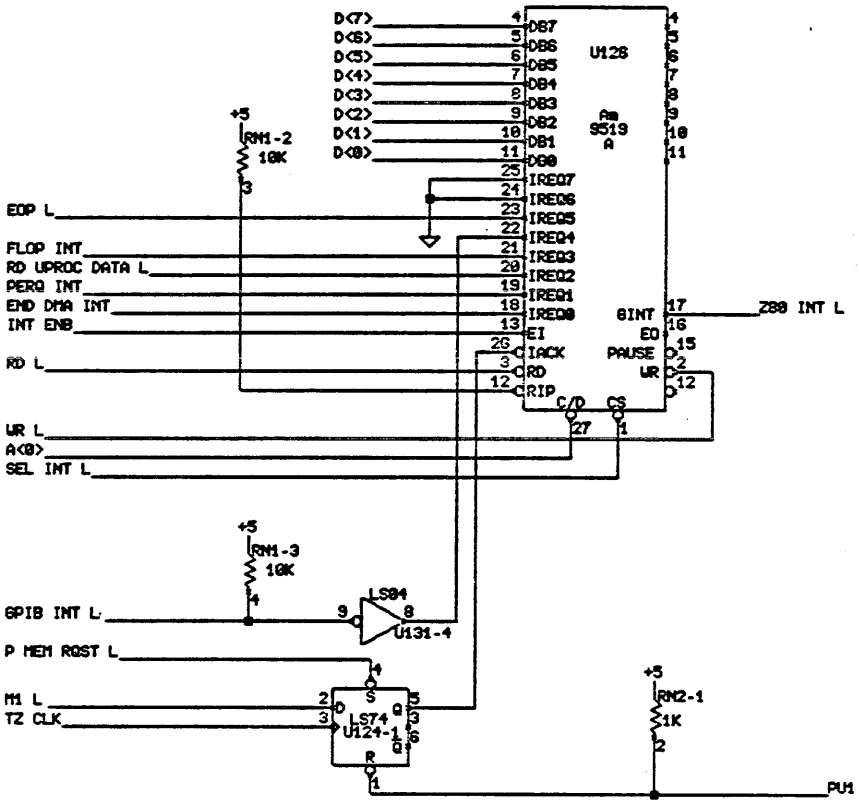

COPYRIGHT (c) 1984

THIS DOCUMENT IS NOT TO BE REPRODUCED IN ANY FORM OR TRANSMITTED IN WHOLE OR IN PART, WITHOUT PRIOR WRITTEN AUTHORIZATION OF PERQ SYSTEMS CORPORATION.

PERQ	TITLE	Z80 INTERRUPTS				e13.db	
	DESIGNED	UCH		SIZE	CODE	IDENTIFICATION	VAR	REV
	DRAWN	13 Sep 82 16:45:01	SBokse	A	11	8198-	02	T
	UPDATED	FEB-23-84	STECK	PROJ :	NON ETHERNET I/O BOARD (NIO)		PAGE 13 OF 44	

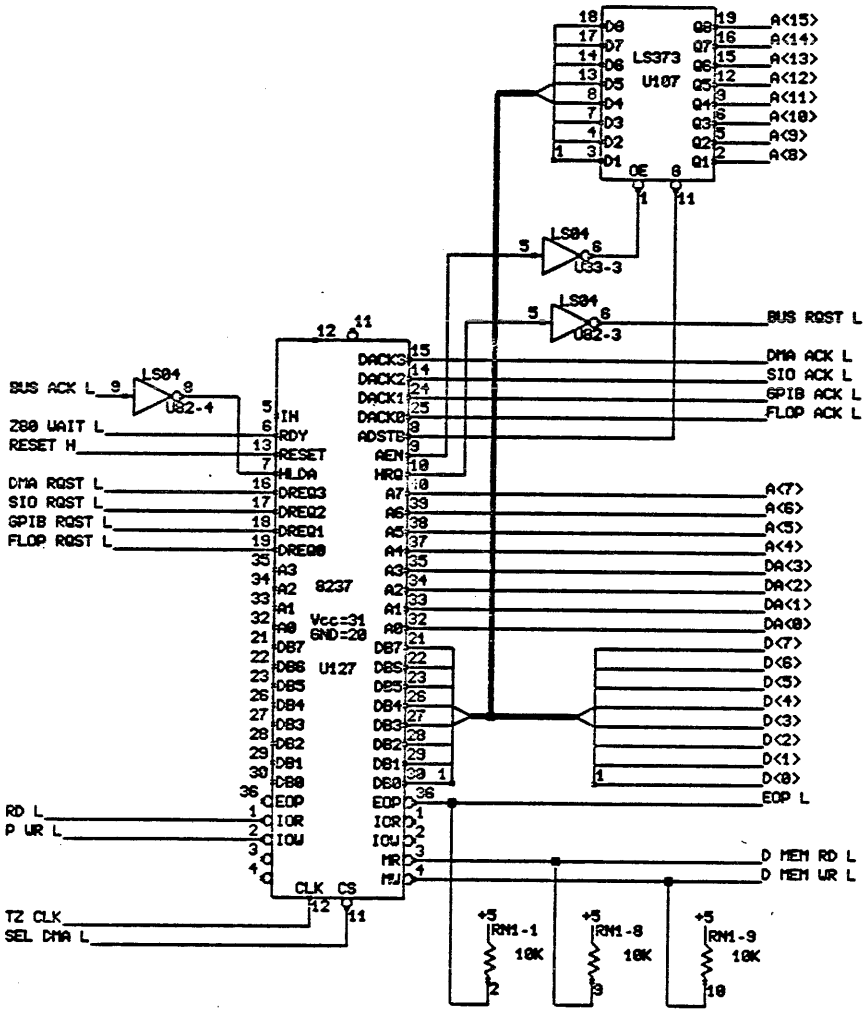

COPYRIGHT (c) 1984

THIS DOCUMENT IS NOT TO BE REPRODUCED IN ANY FORM OR TRANSMITTED IN WHOLE OR IN PART, WITHOUT PRIOR WRITTEN AUTHORIZATION OF PERQ SYSTEMS CORPORATION.

TITLE: Z80 DMA

e14.dp

PERQ

DESIGNED	WCH	
DRAWN	SEP-30-82	SBakse
UPDATED	FEB-23-84	STECK

SIZE	CODE	IDENTIFICATION	VAR	REV
A	11	0198-	02	T

PROJ : NON ETHERNET I/O BOARD (NIO)

PAGE 14 OF 44

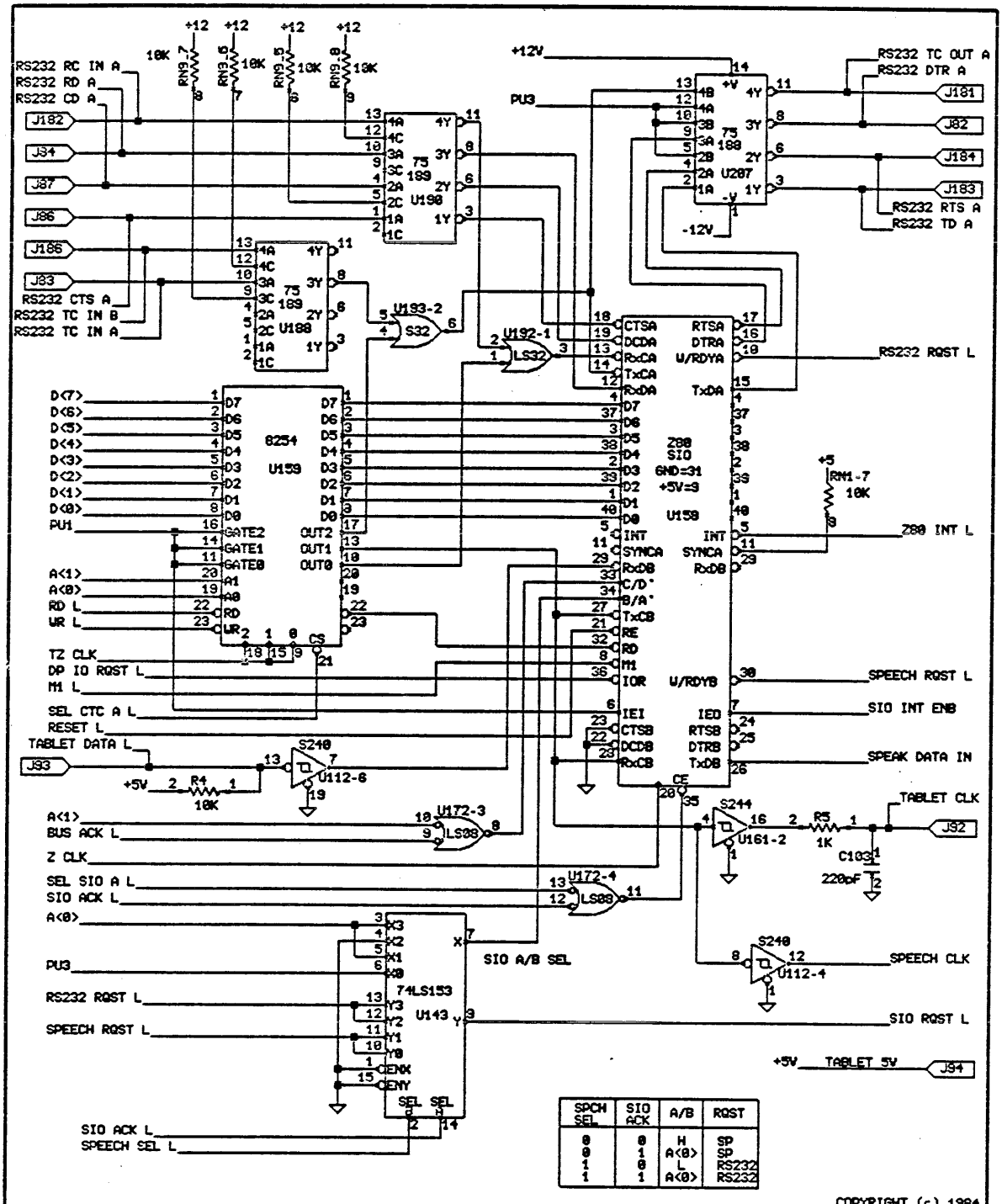

COPYRIGHT (c) 1984
THIS DOCUMENT IS NOT TO BE REPRODUCED IN ANY FORM OR TRANSMITTED IN WHOLE OR IN PART, WITHOUT PRIOR WRITTEN AUTHORIZATION OF PERQ SYSTEMS CORPORATION.

TITLE: Z80 SERIAL IO

e15.db

PERQ

DESIGNED	UCH	
DRAWN	13 Sep 82 16:45:01	SBokse
UPDATED	MAY-24-84	STECK

SIZE	CODE	IDENTIFICATION	VAR	REV
A	11	8198-	02	V

PROJ : NON ETHERNET I/O BOARD (NIO)

PAGE 15 OF 44

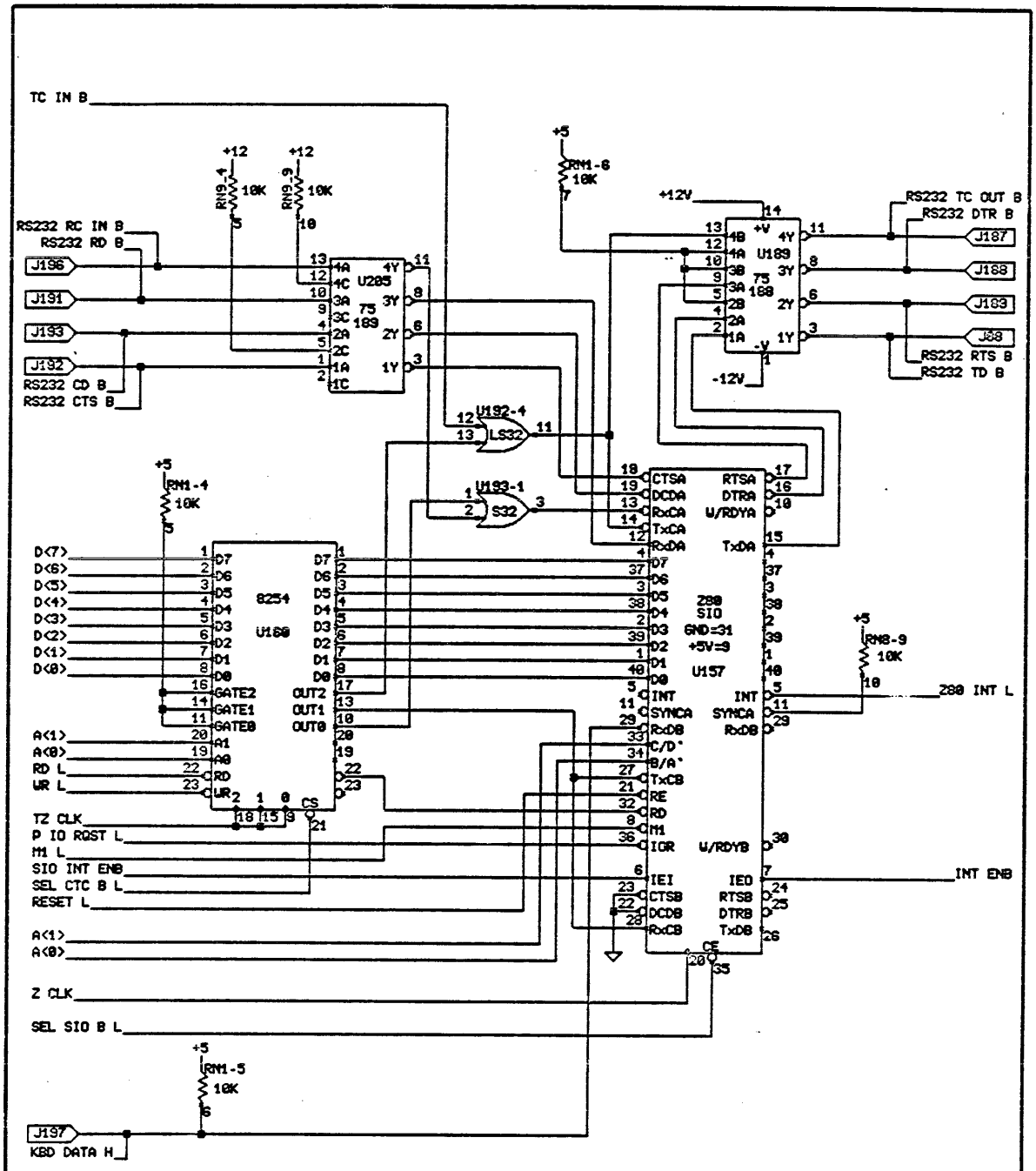

COPYRIGHT (c) 1984

THIS DOCUMENT IS NOT TO BE REPRODUCED IN ANY FORM OR TRANSMITTED IN WHOLE OR IN PART, WITHOUT PRIOR WRITTEN AUTHORIZATION OF PERQ SYSTEMS CORPORATION.

TITLE: Z80 SERIAL IO

e16.db

PERQ

DESIGNED	UCH		SIZE	CODE	IDENTIFICATION	VAR	REV
DRAWN	13 Sep 82 16:45:01	SBokse	A	11	0198-	02	V
UPDATED	MAY-24-84	STECK	PROJ : NON ETHERNET I/O BOARD (NIO)			PAGE 16 OF 44	

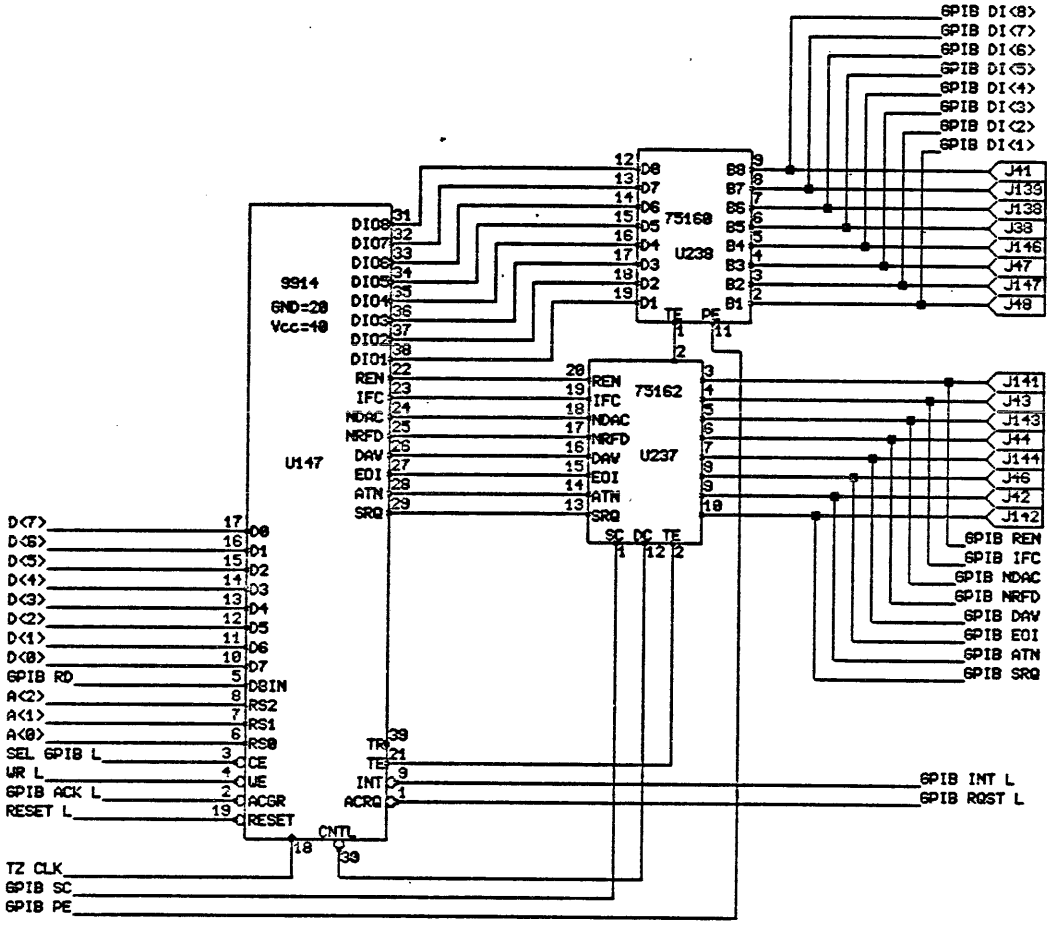

COPYRIGHT (c) 1984

THIS DOCUMENT IS NOT TO BE REPRODUCED IN ANY FORM OR TRANSMITTED IN WHOLE OR IN PART, WITHOUT PRIOR WRITTEN AUTHORIZATION OF PERQ SYSTEMS CORPORATION.

TITLE: Z80 GPIB IO

e17.dp

PERQ

DESIGNED	UCH		
DRAWN	13 Sep 82 16:45:01	SBolose	
UPDATED	FEB-23-84	STECK	

SIZE	CODE	IDENTIFICATION	VAR	REV
A	11	8198-	02	T

PROJ : NON ETHERNET I/O BOARD (NIO)

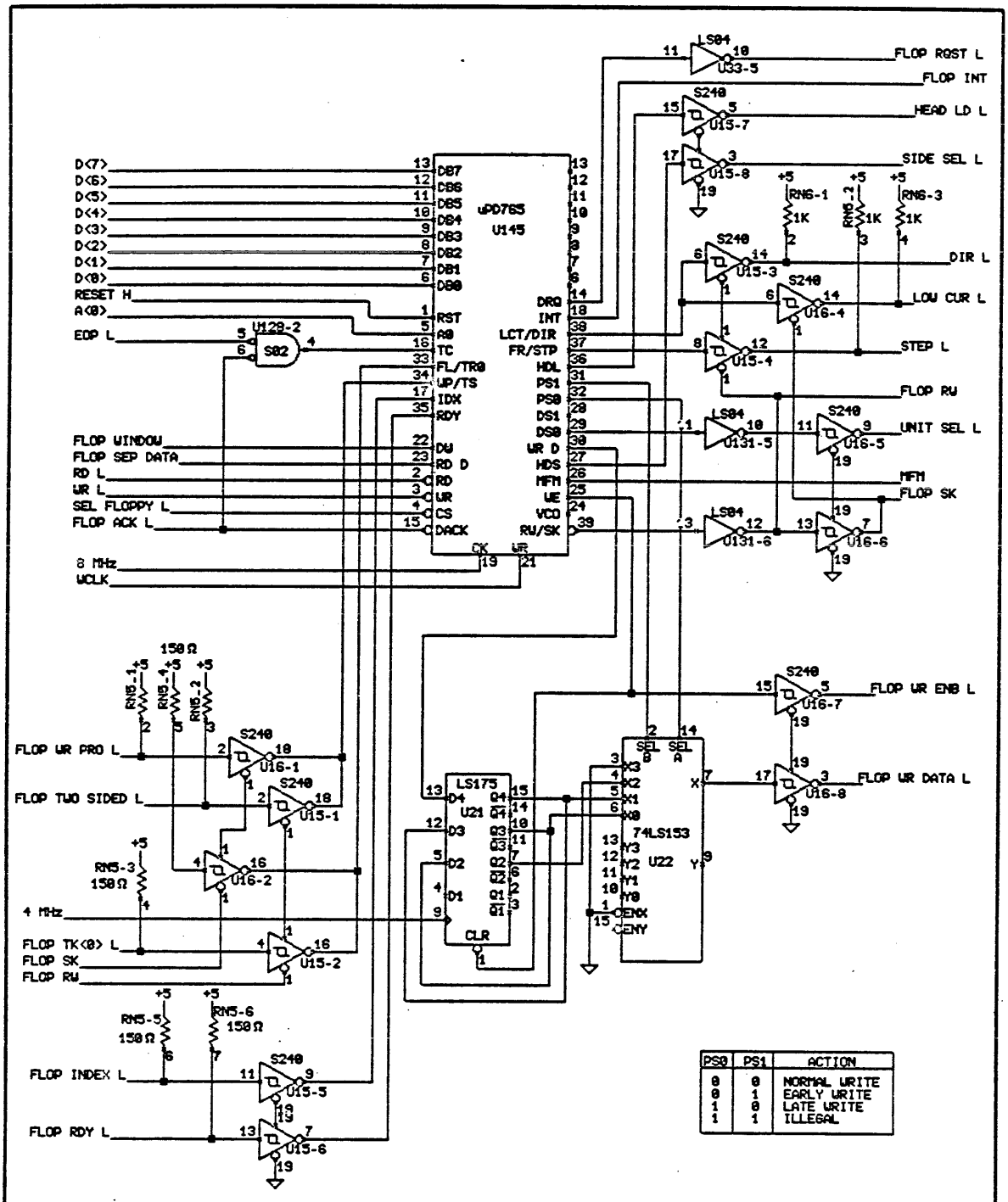

COPYRIGHT (c) 1984

THIS DOCUMENT IS NOT TO BE REPRODUCED IN ANY FORM OR TRANSMITTED IN WHOLE OR IN PART, WITHOUT PRIOR WRITTEN AUTHORIZATION OF PERQ SYSTEMS CORPORATION.

TITLE: Z80 FLOPPY

e18.dp

PERQ

DESIGNED	WCH		SIZE	CODE	IDENTIFICATION	VAR	REV
DRAWN	13 Sep 82 16:45:01	SBokse	A	11	0193-	02	T
UPDATED	FEB-23-84	STECK	PROJ :	MON ETHERNET I/O BOARD (MIO)		PAGE 18 OF 44	

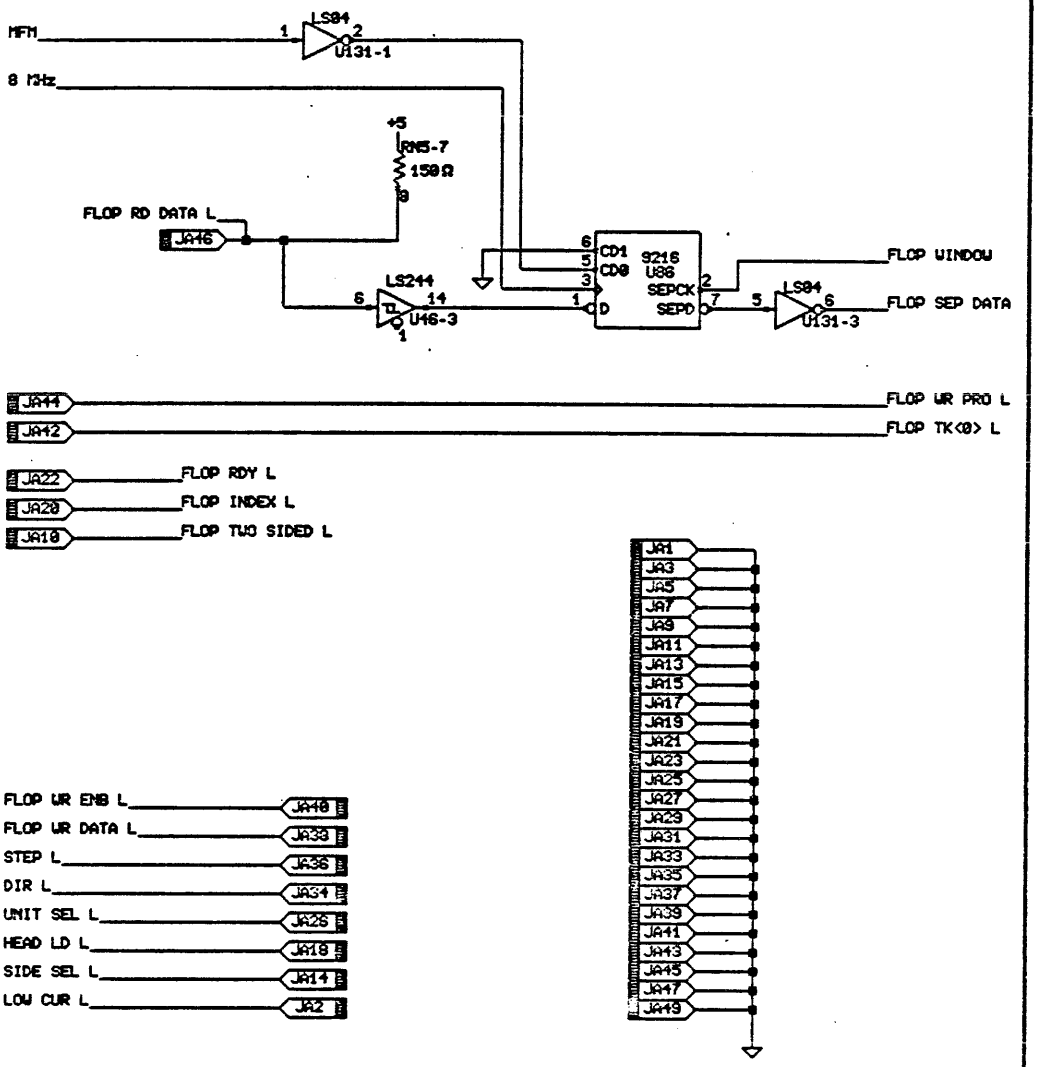

COPYRIGHT (c) 1984

THIS DOCUMENT IS NOT TO BE REPRODUCED IN ANY FORM OR TRANSMITTED IN WHOLE OR IN PART, WITHOUT PRIOR WRITTEN AUTHORIZATION OF PERQ SYSTEMS CORPORATION.

TITLE: FLOPPY DISK CONNECTOR

e19.db

PERQ

DESIGNED	UCH	
DRAWN	13 Sep 82 16:15:01	SBokse
UPDATED	FEB-23-84	STECK

SIZE	CODE	IDENTIFICATION	VAR	REV
A	11	0198-	02	T

PROJ : MON ETHERNET I/O BOARD (NIO)

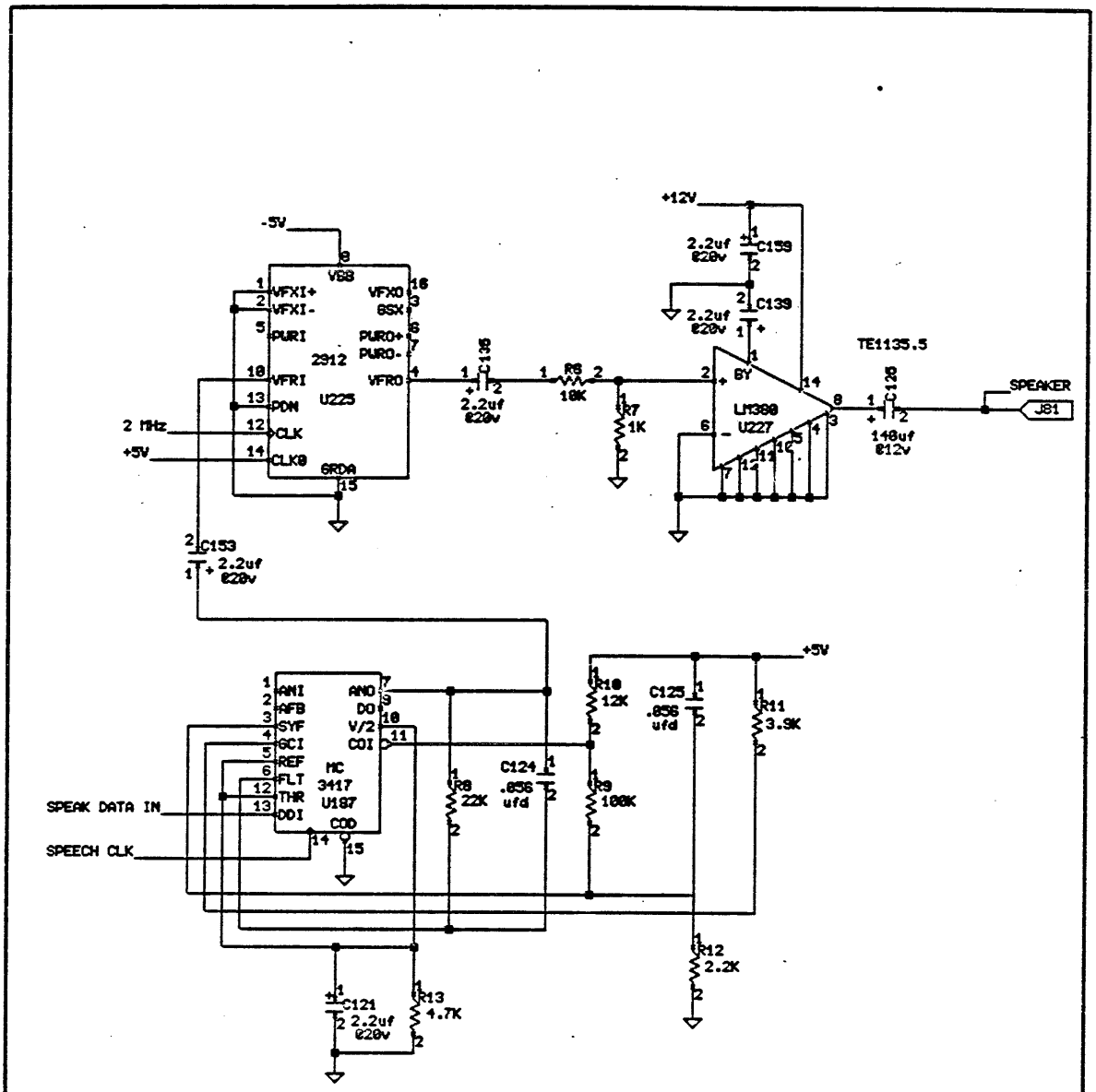

COPYRIGHT (c) 1984

THIS DOCUMENT IS NOT TO BE REPRODUCED IN ANY FORM OR TRANSMITTED IN WHOLE OR IN PART, WITHOUT PRIOR WRITTEN AUTHORIZATION OF PERQ SYSTEMS CORPORATION.

TITLE: CVSD DEMODULATOR						e20.db	
PERQ	DESIGNED	UCH		SIZE	CODE	IDENTIFICATION	VAR	REV
	DRAWN	13 Sep 82 16:45:31	SBokse	A	11	8198-	02	T
	UPDATED	FEB-23-84	STECK	PROJ : NON ETHERNET I/O BOARD (NIO)			PAGE 20 OF 44	

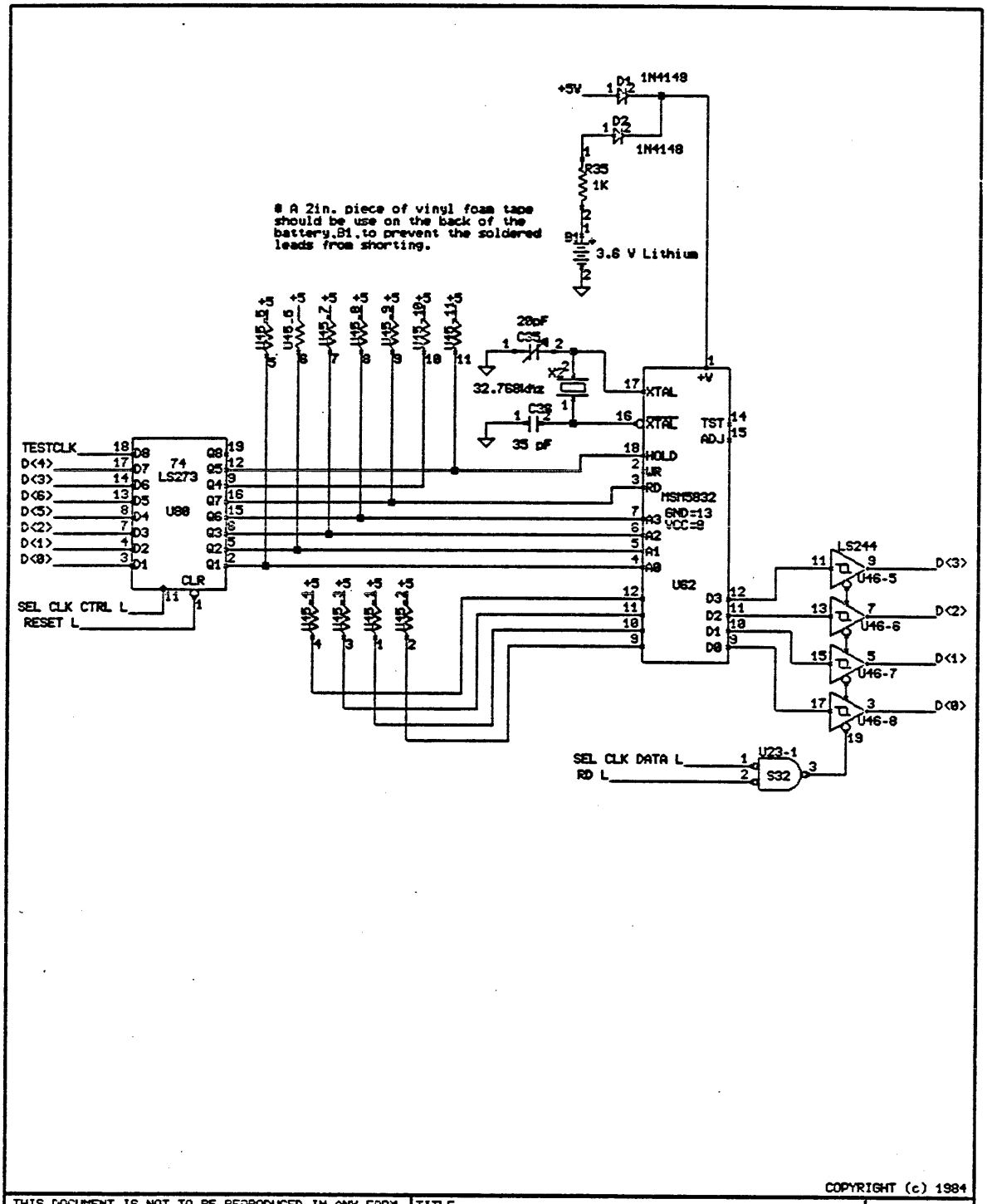

COPYRIGHT (c) 1984

THIS DOCUMENT IS NOT TO BE REPRODUCED IN ANY FORM OR TRANSMITTED IN WHOLE OR IN PART, WITHOUT PRIOR WRITTEN AUTHORIZATION OF PERQ SYSTEMS CORPORATION.

TITLE: REAL TIME CLOCK

e21.db

PERQ

DESIGNED	WCH		SIZE	CODE	IDENTIFICATION	VAR	REV
DRAWN	13 Sep 82 16:15:01	SBokse	A	11	0198-	02	U
UPDATED	MAY-24-84	STECK	PROJ : NON ETHERNET I/O BOARD (NIO)			PAGE 21 OF 44	

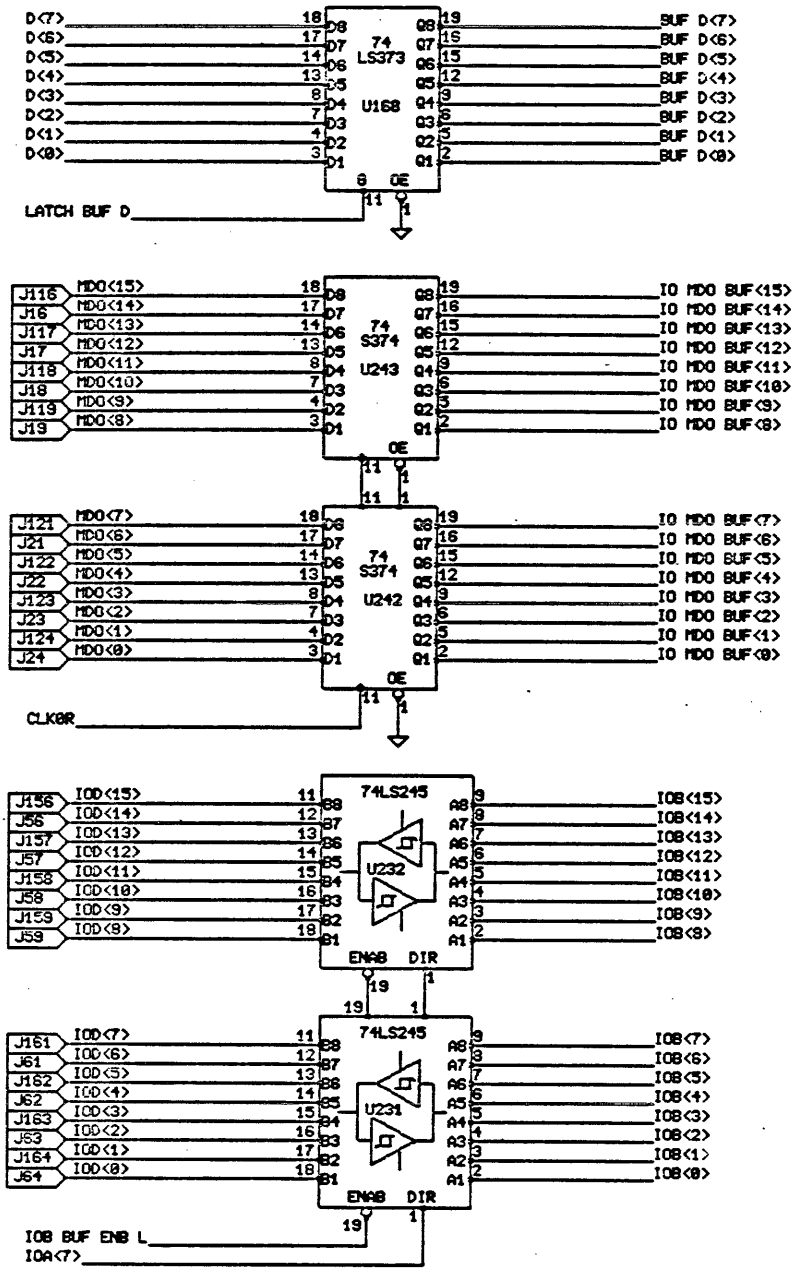

COPYRIGHT (c) 1984

THIS DOCUMENT IS NOT TO BE REPRODUCED IN ANY FORM OR TRANSMITTED IN WHOLE OR IN PART, WITHOUT PRIOR WRITTEN AUTHORIZATION OF PERQ SYSTEMS CORPORATION.

TITLE: EIO BUS BUFFERS

e22.db

PERQ

DESIGNED	UCH	
DRAWN	13 Sep 82 16:45:01	SBokse
UPDATED	FEB-23-84	STECK

SIZE	CODE	IDENTIFICATION	VAR	REV
A	11	0198-	02	T

PROJ : NON ETHERNET I/O BOARD (NIO)

PAGE 22 OF 44

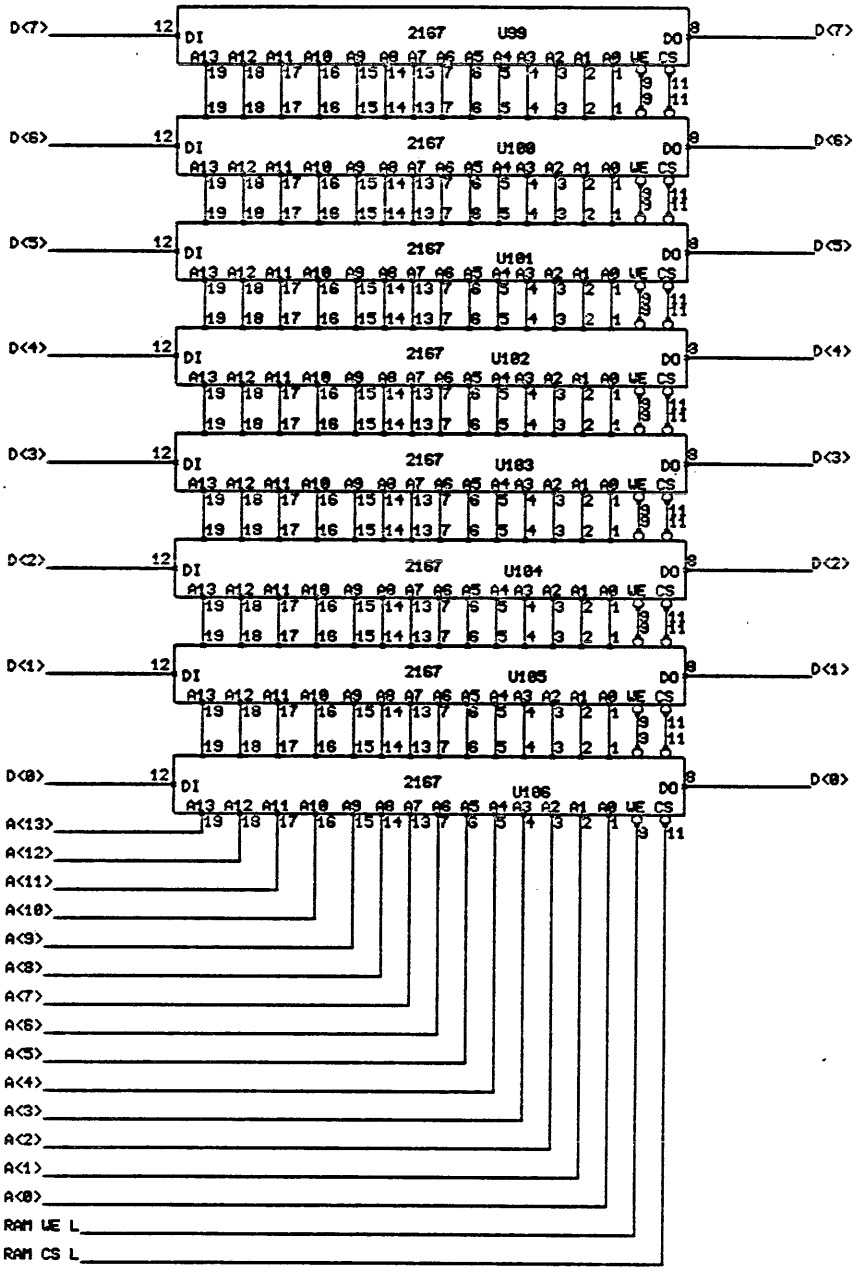

COPYRIGHT (c) 1984

THIS DOCUMENT IS NOT TO BE REPRODUCED IN ANY FORM OR TRANSMITTED IN WHOLE OR IN PART, WITHOUT PRIOR WRITTEN AUTHORIZATION OF PERQ SYSTEMS CORPORATION.

TITLE	Z80 RAM					e23.db	
PERQ	DESIGNED	UCH		SIZE	CODE	IDENTIFICATION	VAR	REV
	DRAWN	13 Sep 82 16:45:01	SBoksa	A	11	0198-	02	T
	UPDATED	FEB-23-84	STECK	PROJ :	NON ETHERNET I/O BOARD (NIO)		PAGE 23	OF 44

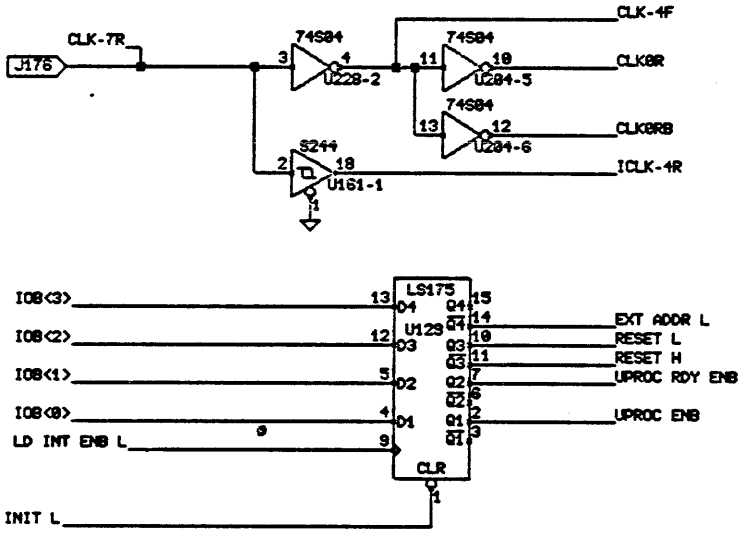

COPYRIGHT (c) 1984

THIS DOCUMENT IS NOT TO BE REPRODUCED IN ANY FORM OR TRANSMITTED IN WHOLE OR IN PART, WITHOUT PRIOR WRITTEN AUTHORIZATION OF PERQ SYSTEMS CORPORATION.

TITLE: IO BUS CONTROL & SYSTEM CLOCKS

e24.db

PERQ

DESIGNED	UCH		SIZE	CODE	IDENTIFICATION	VAR	REV
DRAWN	13 Sep 82 16:45:01	SBokse	A	1 1	0 1 9 8 -	0 2	T
UPDATED	FEB-23-84	STECK	PROJ : NON ETHERNET I/O BOARD (NIO)			PAGE 24 OF 44	

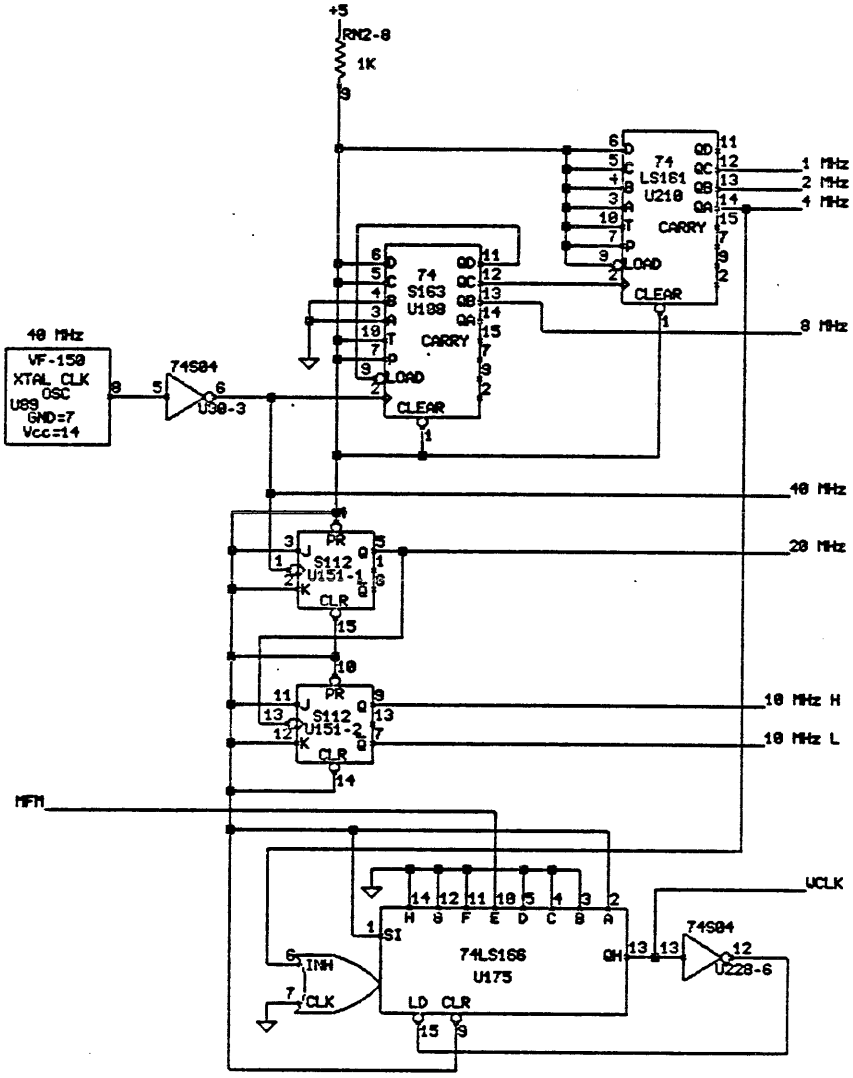

COPYRIGHT (c) 1984

THIS DOCUMENT IS NOT TO BE REPRODUCED IN ANY FORM OR TRANSMITTED IN WHOLE OR IN PART, WITHOUT PRIOR WRITTEN AUTHORIZATION OF PERQ SYSTEMS CORPORATION.

TITLE: Z80 CLOCKS

e25.db

PERQ

DESIGNED	UCH		SIZE	CODE	IDENTIFICATION	VAR	REV
DRAWN	13 Sep 82 16:45:31	SBckse	A	1 1	0 1 9 8 -	0 2	T
UPDATED	FEB-23-84	STECK	PROJ : NON ETHERNET I/O BOARD (NIO)			PAGE 25 OF 44	

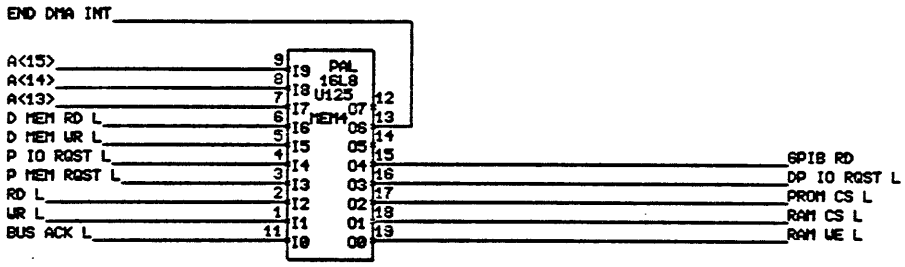

Z80 BOOT PROM

(FOR 8.3 & 8.4 SOFTWARE, USE PROM V100.017)

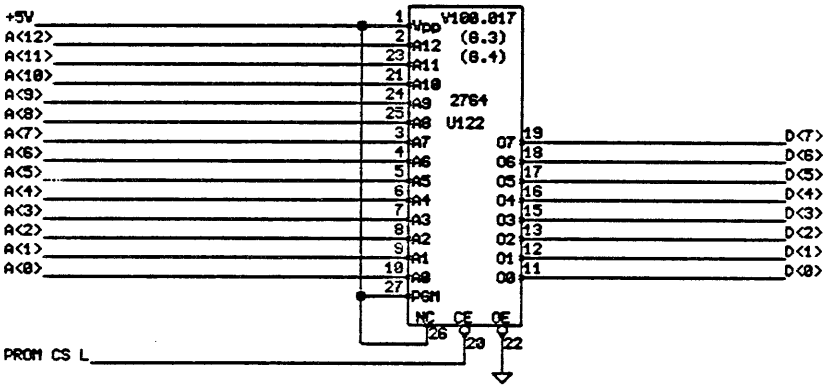

COPYRIGHT (c) 1984

THIS DOCUMENT IS NOT TO BE REPRODUCED IN ANY FORM OR TRANSMITTED IN WHOLE OR IN PART, WITHOUT PRIOR WRITTEN AUTHORIZATION OF PERQ SYSTEMS CORPORATION.

TITLE	MEMORY CONTROL						e26.db	
PERQ	DESIGNED	WCH		SIZE	CODE	IDENTIFICATION	VAR	REV
	DRAWN	13 Sep 82 16:45:01	SBokse	A	11	0198-	02	T
	UPDATED	FEB-23-84	STECK	PROJ :	NON ETHERNET I/O BOARD (NIO)		PAGE 26 OF 44	

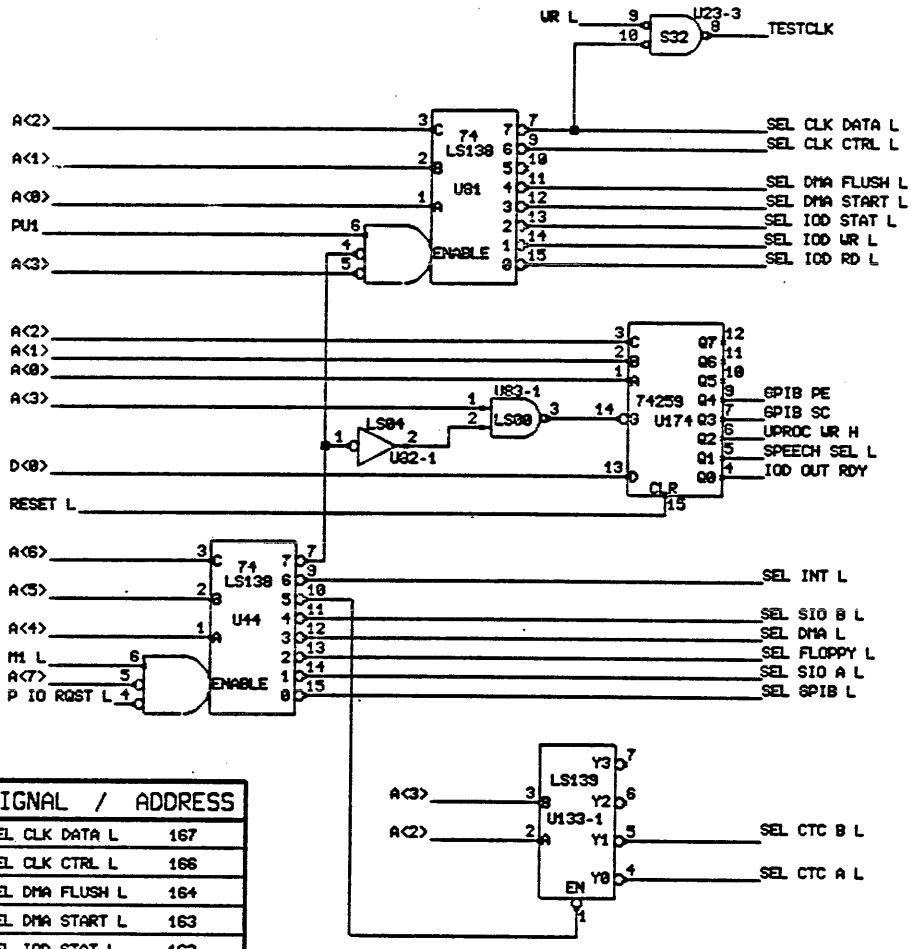

SIGNAL / ADDRESS	
SEL CLK DATA L	167
SEL CLK CTRL L	166
SEL DMA FLUSH L	164
SEL DMA START L	163
SEL IOD STAT L	162
SEL IOD WR L	161
SEL IOD RD L	160
GPIB PE	174
GPIB SC	173
UPROC WR H	172
SPEECH SEL L	171
IOD OUT RDY	170
SEL INT L	140:157
SEL CTC A L	120:127
SEL CTC B L	130:137
SEL SIO B L	100:117
SEL DMA L	60:77
SEL FLOPPY L	40:57
SEL SIO A L	20:37
SEL GPIB L	0:17

COPYRIGHT (c) 1984

THIS DOCUMENT IS NOT TO BE REPRODUCED IN ANY FORM OR TRANSMITTED IN WHOLE OR IN PART, WITHOUT PRIOR WRITTEN AUTHORIZATION OF PERQ SYSTEMS CORPORATION.

TITLE: Z80 ADDRESS DECODE

e27.dp

PERQ

DESIGNED	UCH	
DRAWN	13 Sep 82 16:45:21	SBckse
UPDATED	FEB-23-84	STECK

SIZE	CODE	IDENTIFICATION	VAR	REV
A	11	0198-	02	T

PROJ : NON ETHERNET I/O BOARD (NIO)

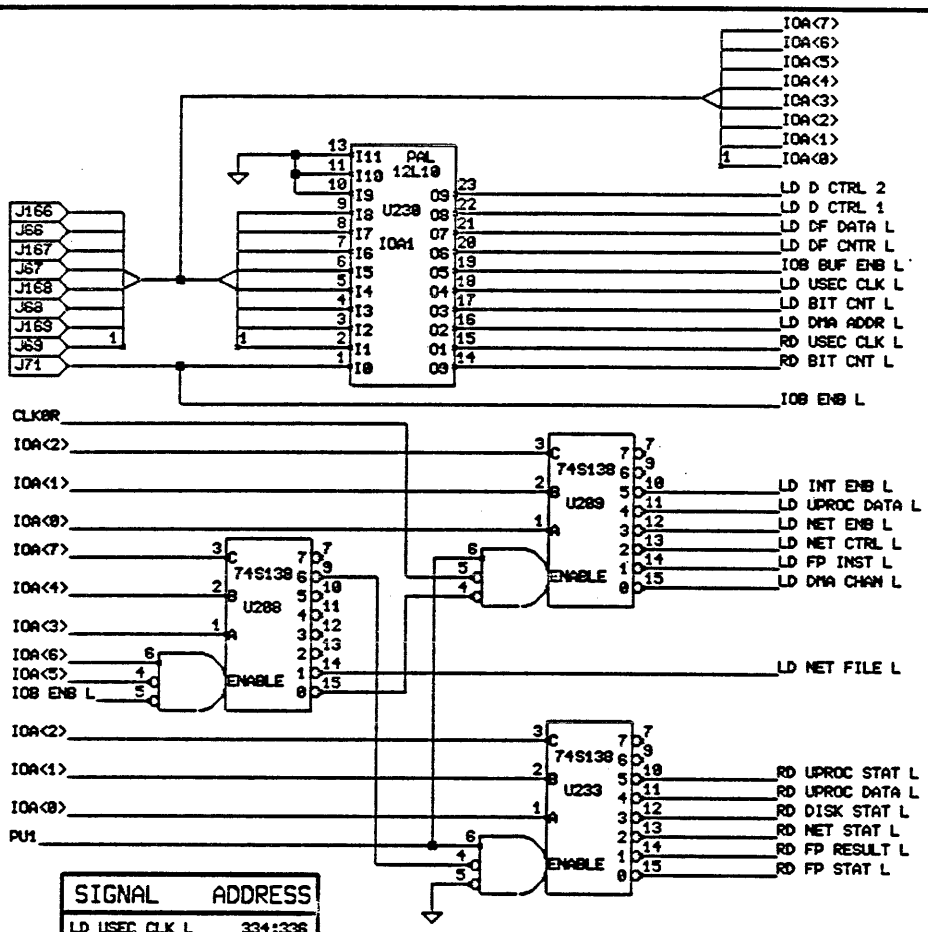

SIGNAL	ADDRESS
LD USEC CLK L	334:336
LD BIT CNT L	330:332
LD DMA ADDR L	324:327
RD USEC CLK L	136:137
RD BIT CNT L	132:133
LD INT ENB L	305
LD UPROC DATA L	304
LD NET ENB L	303
LD NET CTRL L	302
LD FP INST L	301
LD DMA CHAN L	300
LD NET FILE L	310:317
RD UPROC STAT L	125
RD UPROC DATA L	124
RD DISK STAT L	123
RD NET STAT L	122
RD FP RESULT L	121
RD FP STAT L	120

SIGNAL / ADDRESS	
LD D CTRL 2	323
LD D CTRL 1	322
LD DF DATA L	321
LD DF CNTR L	320
IOB BUF ENB L	100:137 300:337

COPYRIGHT (c) 1984

THIS DOCUMENT IS NOT TO BE REPRODUCED IN ANY FORM OR TRANSMITTED IN WHOLE OR IN PART, WITHOUT PRIOR WRITTEN AUTHORIZATION OF PERQ SYSTEMS CORPORATION.

TITLE: IOA DECODES

e28.db

PERQ

DESIGNED	UCH		SIZE	CODE	IDENTIFICATION	VAR	REV
DRAWN	13 Sep 82 16:45:01	SBokse	A	11	0198-	02	T
UPDATED	FEB-23-84	STECK	PROJ : MON ETHERNET I/O BOARD (MIO)			PAGE 28	OF 44

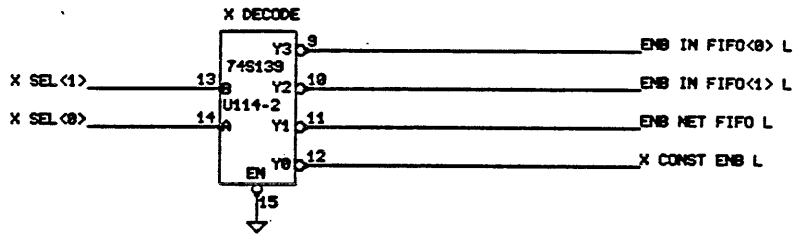

COPYRIGHT (c) 1984

THIS DOCUMENT IS NOT TO BE REPRODUCED IN ANY FORM OR TRANSMITTED IN WHOLE OR IN PART, WITHOUT PRIOR WRITTEN AUTHORIZATION OF PERQ SYSTEMS CORPORATION.

TITLE	STATE MACHINE						e29.dp	
PERQ	DESIGNED	UCH		SIZE	CODE	IDENTIFICATION	VAR	REV
	DRAWN	13 Sep 82 16:45:01	SBokse	A	1 1	8 1 9 8 -	0 2	T
	UPDATED	FEB-23-84	STECK	PROJ :	NON ETHERNET I/O BOARD (NIO)		PAGE 29 OF 44	

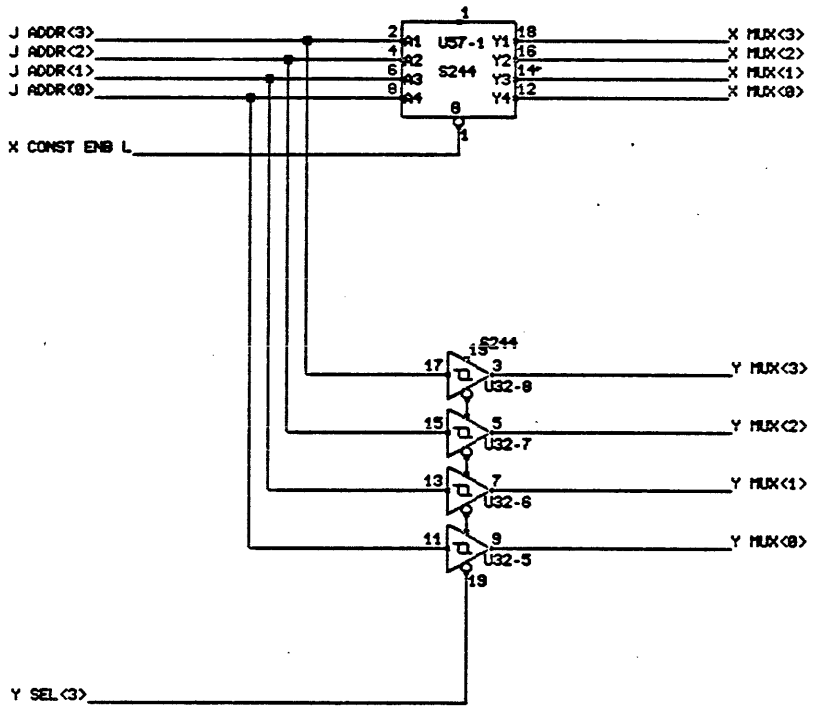

COPYRIGHT (c) 1984

THIS DOCUMENT IS NOT TO BE REPRODUCED IN ANY FORM OR TRANSMITTED IN WHOLE OR IN PART, WITHOUT PRIOR WRITTEN AUTHORIZATION OF PERQ SYSTEMS CORPORATION.

TITLE	NET CONTROLLER CONSTANTS					e30.dp	
PERQ	DESIGNED	WCH		SIZE	CODE	IDENTIFICATION	VAR	REV
	DRAWN	13 Sep 82 16:45:01	SBokse	A	11	0198-	02	T
	UPDATED	FEB-23-84	STECK	PROJ :	NON ETHERNET I/O BOARD (NIO)		PAGE 30 OF 44	

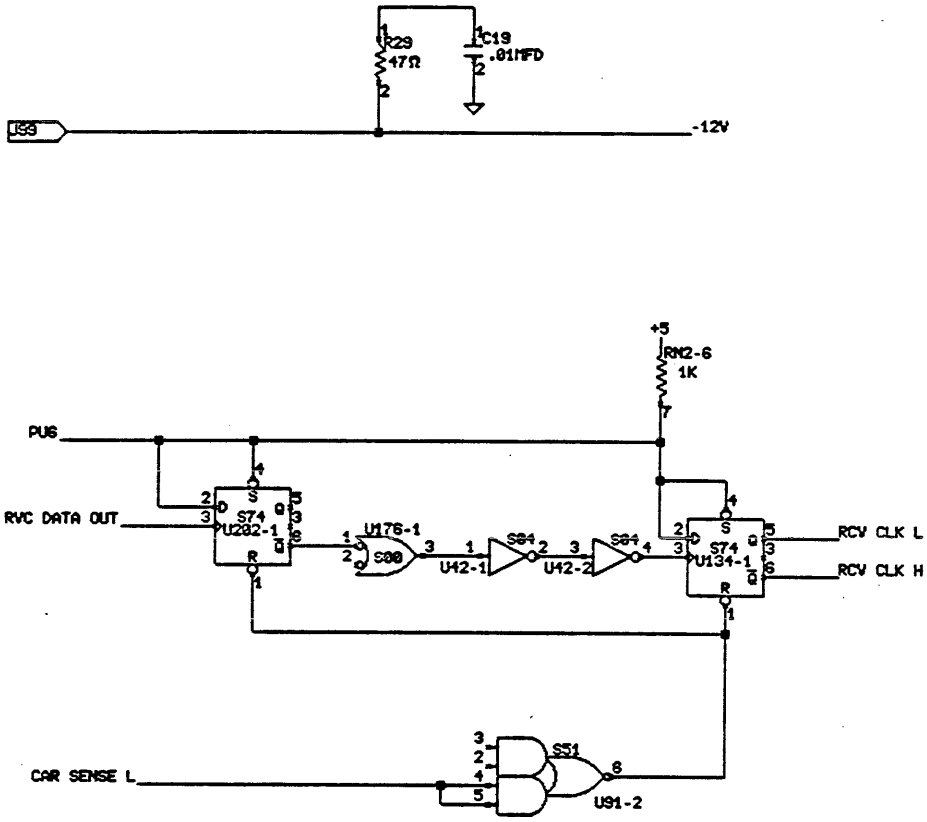

COPYRIGHT (c) 1984

THIS DOCUMENT IS NOT TO BE REPRODUCED IN ANY FORM OR TRANSMITTED IN WHOLE OR IN PART, WITHOUT PRIOR WRITTEN AUTHORIZATION OF PERQ SYSTEMS CORPORATION.

TITLE	DATA RECOVERY						e31.db
PERQ	DESIGNED	UCH		SIZE	CODE	IDENTIFICATION	VAR	REV
	DRAWN	13 Sep 82 16:45:01	SBakse	A	11	0198-	02	T
	UPDATED	FEB-23-84	STECK	PROJ :	NCN ETHERNET I/O BOARD (NIO)		PAGE 31 OF 44	

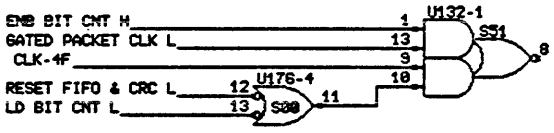

COPYRIGHT (c) 1984

THIS DOCUMENT IS NOT TO BE REPRODUCED IN ANY FORM OR TRANSMITTED IN WHOLE OR IN PART, WITHOUT PRIOR WRITTEN AUTHORIZATION OF PERQ SYSTEMS CORPORATION.

TITLE	NET BIT COUNTER						e32.dp	
PERQ	DESIGNED	UCH		SIZE	CODE	IDENTIFICATION	VAR	REV
	DRAWN	13 Sep 82 16:15:01	SBakse	A	11	8198-	02	T
	UPDATED	FEB-23-84	STECK	PROJ :	NON ETHERNET I/O BOARD (NIO)		PAGE 32 OF 44	

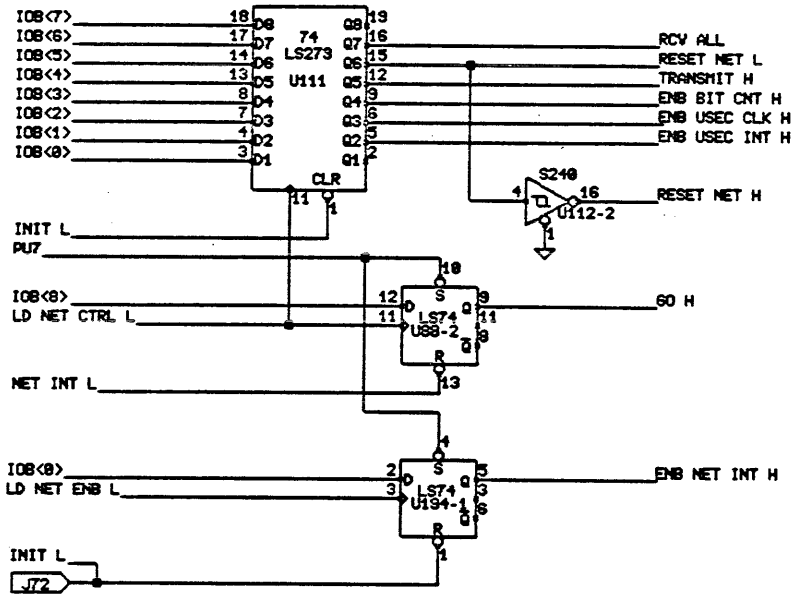

COPYRIGHT (c) 1984

THIS DOCUMENT IS NOT TO BE REPRODUCED IN ANY FORM OR TRANSMITTED IN WHOLE OR IN PART, WITHOUT PRIOR WRITTEN AUTHORIZATION OF PERQ SYSTEMS CORPORATION.

TITLE: PERQ CONTROL REGISTER

e33.dp

PERQ

DESIGNED	UCH		
DRAWN	13 Sep 82 16:45:01	SBokse	
UPDATED	FEB-23-84	STECK	

SIZE	CODE	IDENTIFICATION	VAR	REV
A	11	0198-	02	T

PROJ : NON ETHERNET I/O BOARD (NIO)

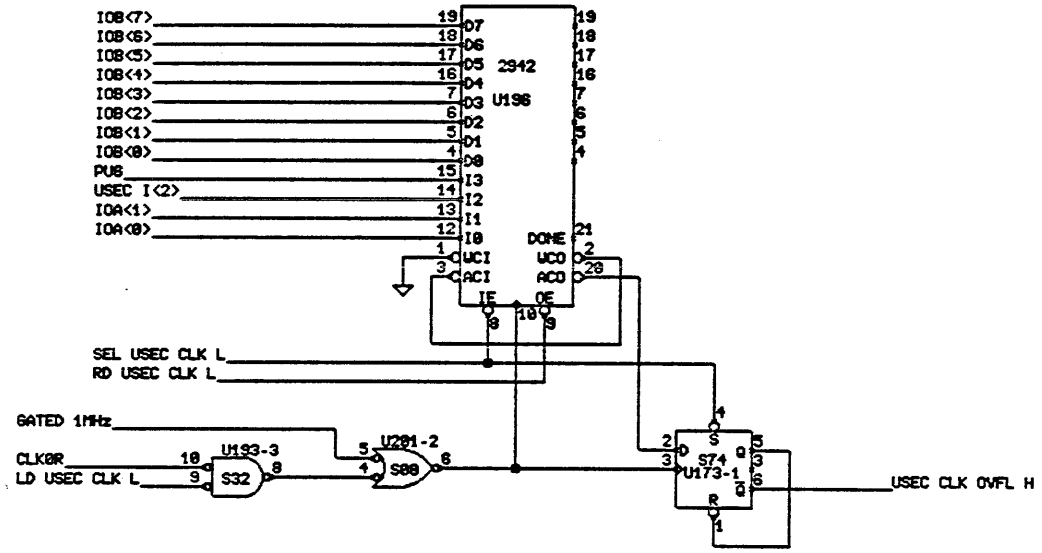

COPYRIGHT (c) 1984

THIS DOCUMENT IS NOT TO BE REPRODUCED IN ANY FORM OR TRANSMITTED IN WHOLE OR IN PART, WITHOUT PRIOR WRITTEN AUTHORIZATION OF PERQ SYSTEMS CORPORATION.

TITLE: MICROSECOND CLOCK

e34.db

PERQ

DESIGNED	WCH		
DRAWN	13 Sep 82 16:45:31	SBokse	
UPDATED	FEB-23-84	STECK	

SIZE	CODE	IDENTIFICATION	VAR	REV
A	11	0198-	02	T

PROJ : NON ETHERNET I/O BOARD (MIO)

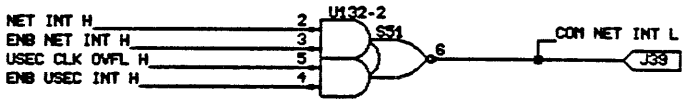

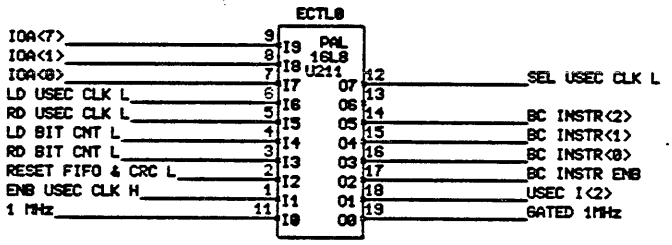

. COPYRIGHT (c) 1984

THIS DOCUMENT IS NOT TO BE REPRODUCED IN ANY FORM OR TRANSMITTED IN WHOLE OR IN PART, WITHOUT PRIOR WRITTEN AUTHORIZATION OF PERQ SYSTEMS CORPORATION..

TITLE: NET CONTROLLER

e35.dp

PERQ

DESIGNED	UCH		SIZE	CODE	IDENTIFICATION	VAR	REV
DRAWN	13 Sep 82 15:15:01	SBakse	A	1 1	0 1 9 8 -	0 2	T
UPDATED	FEB-23-84	STECK	PROJ : NCN ETHERNET I/O BOARD (NIO)			PAGE 35 OF 44	

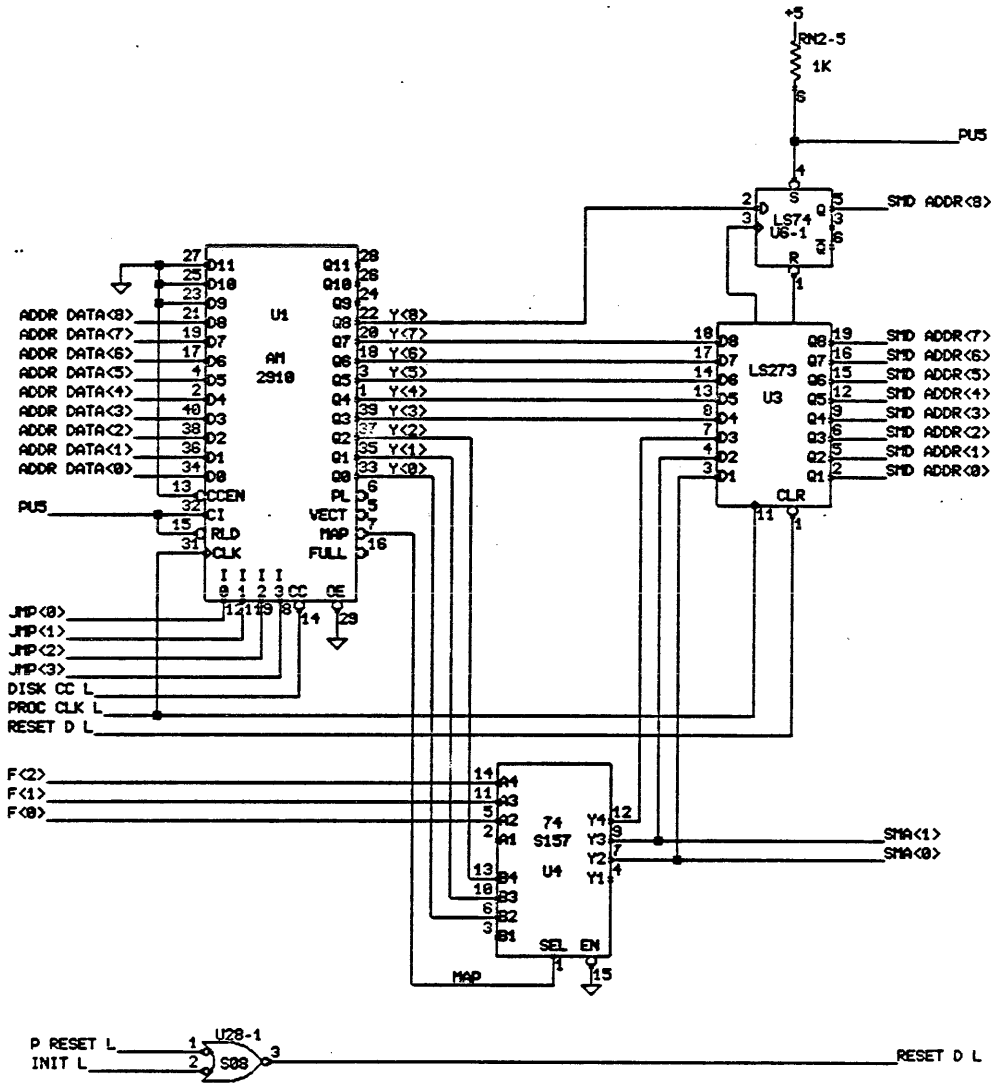

COPYRIGHT (c) 1984

THIS DOCUMENT IS NOT TO BE REPRODUCED IN ANY FORM OR TRANSMITTED IN WHOLE OR IN PART, WITHOUT PRIOR WRITTEN AUTHORIZATION OF PERQ SYSTEMS CORPORATION.

PERQ	TITLE	DISK STATE MACHINE				e36.dp	
	DESIGNED	UCH		SIZE	CODE	IDENTIFICATION	VAR	REV
	DRAWN	13 Sep 82 16:45:01	SBokse	A	11	0198-	02	T
	UPDATED	FEB-23-84	STECK	PROJ :	NON ETHERNET I/O BOARD (NIO)		PAGE 36 OF 44	

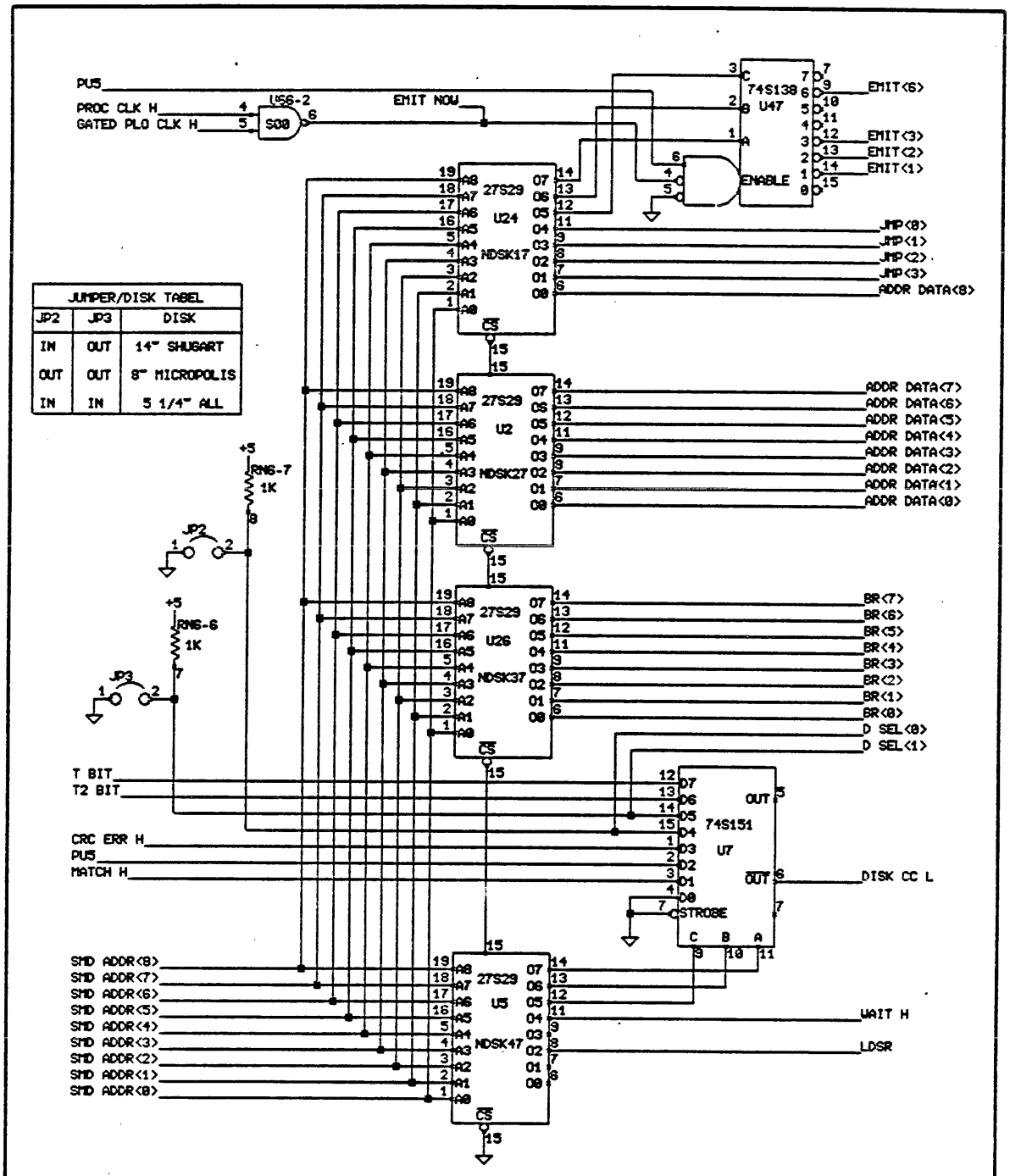

COPYRIGHT (c) 1984

THIS DOCUMENT IS NOT TO BE REPRODUCED IN ANY FORM OR TRANSMITTED IN WHOLE OR IN PART, WITHOUT PRIOR WRITTEN AUTHORIZATION OF PERQ SYSTEMS CORPORATION.

TITLE: DISK STATE MACHINE

e37.db

PERQ

DESIGNED	UCH		
DRAWN	13 Sep 82 16:45:01	SBokse	
UPDATED	JUNE/11/84	STECK	

SIZE	CODE	IDENTIFICATION	VAR	REV
A	11	0198-	02	X

PROJ : NON ETHERNET I/O BOARD (NIO)

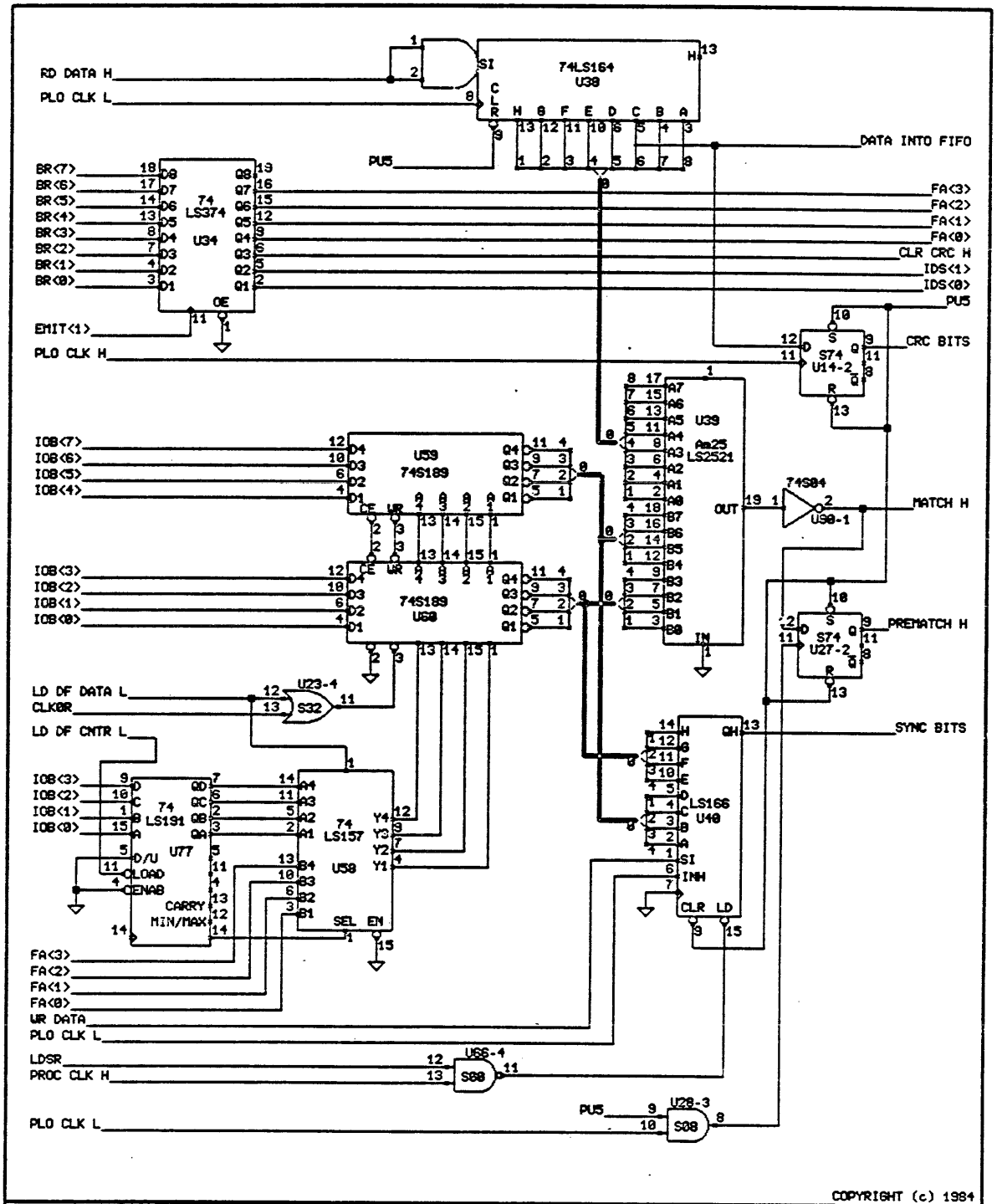

COPYRIGHT (c) 1984

THIS DOCUMENT IS NOT TO BE REPRODUCED IN any FORM OR TRANSMITTED IN WHOLE OR IN PART, WITHOUT PRIOR WRITTEN AUTHORIZATION OF PERQ SYSTEMS CORPORATION.

TITLE: DISK REGISTER FILE

e38.dp

PERQ

DESIGNED	UCH		
DRAWN	13 Sep 82 16:45:01	SBokse	
UPDATED	AUG/10/84	STECK	

SIZE	CODE	IDENTIFICATION	VAR	REV
A	11	0198-	02	T

PROJ : NON ETHERNET I/O BOARD (NIO)

PAGE 38 OF 44

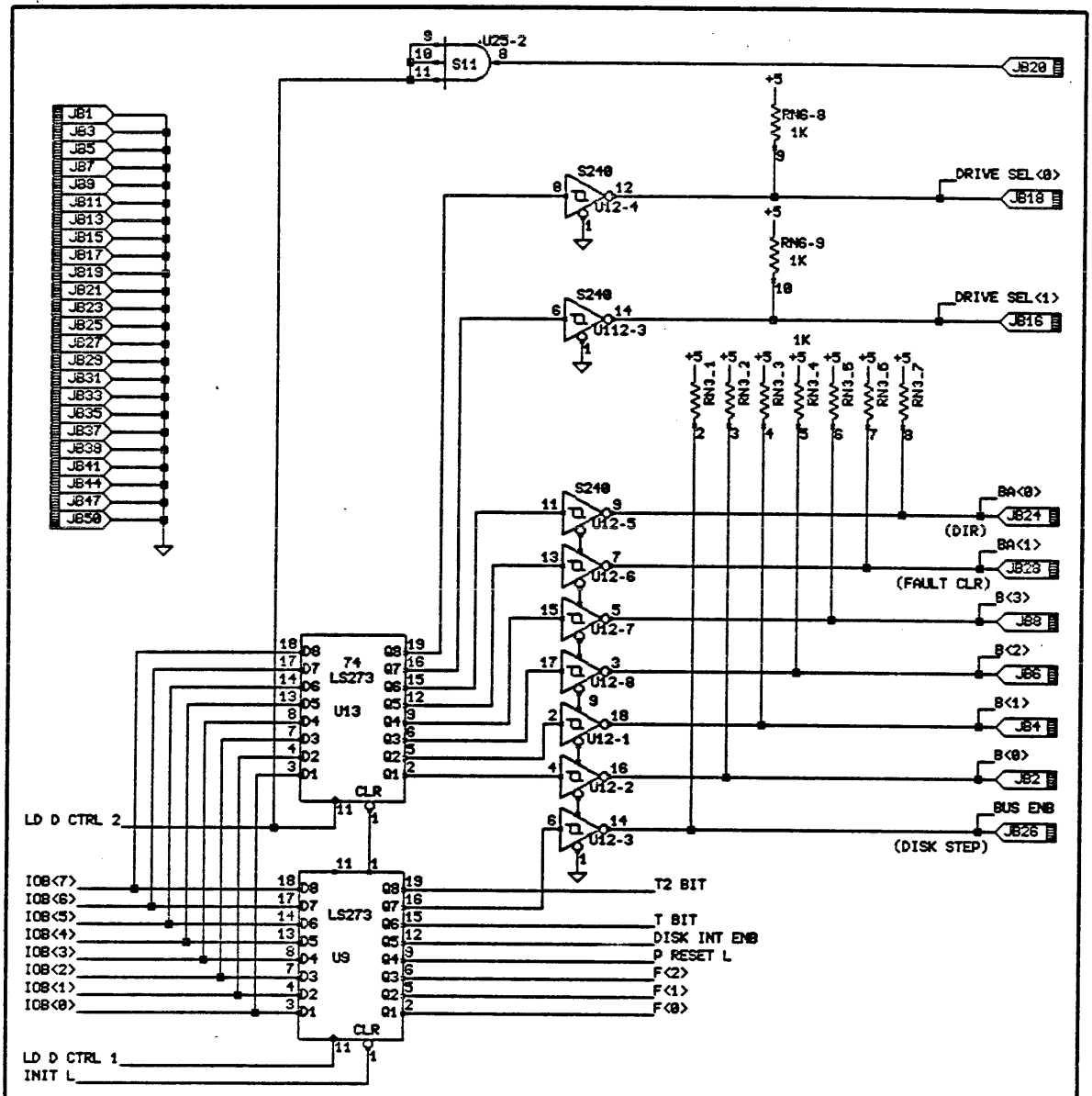

NOTE:
(PARANTHESIS CONTAIN SHUGART SIGNAL NAMES)

COPYRIGHT (c) 1984

THIS DOCUMENT IS NOT TO BE REPRODUCED IN ANY FORM OR TRANSMITTED IN WHOLE OR IN PART, WITHOUT PRIOR WRITTEN AUTHORIZATION OF PERQ SYSTEMS CORPORATION.

TITLE	DISK CONTROL REGISTERS					e39.db	
PERQ	DESIGNED	WCH		SIZE	CODE	IDENTIFICATION	VAR	REV
	DRAWN	13 Sep 82 16:45:01	SBoksa	A	11	0198-	02	T
	UPDATED	FEB-23-84	STECK	PROJ :	NCN ETHERNET I/O BOARD (NIO)		PAGE	39 OF 44

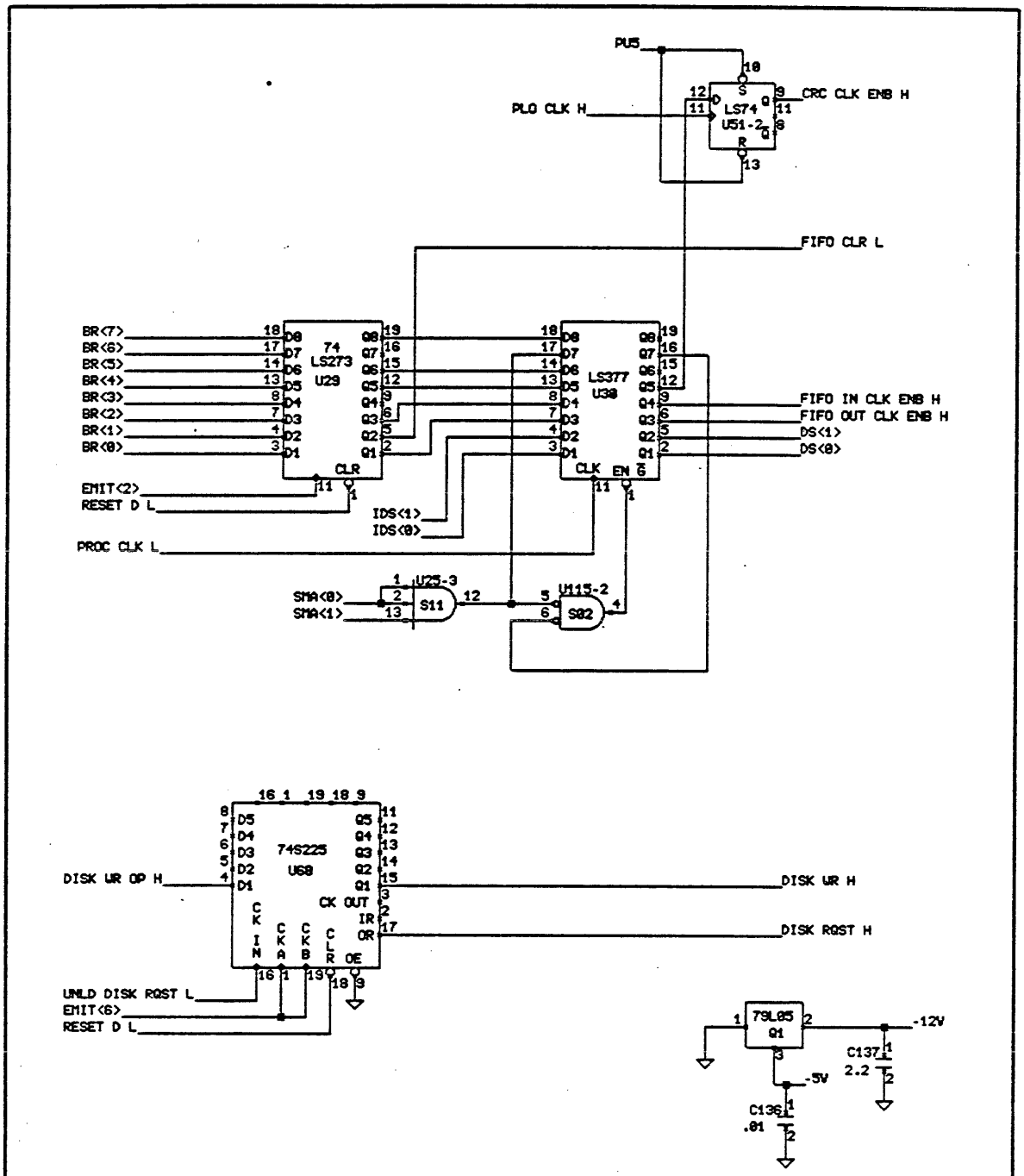

COPYRIGHT (c) 1984

THIS DOCUMENT IS NOT TO BE REPRODUCED IN ANY FORM OR TRANSMITTED IN WHOLE OR IN PART, WITHOUT PRIOR WRITTEN AUTHORIZATION OF PERQ SYSTEMS CORPORATION.

TITLE: DISK FIFO CONTROL

e40.do

PERQ

DESIGNED	UCH		
DRAWN	13 Sep 82 16:45:01	SBokse	
UPDATED	FEB-23-84	STECK	

SIZE	CODE	IDENTIFICATION	VAR	REV
A	11	0198-	02	T

PROJ : NON ETHERNET I/O BOARD (NIO)

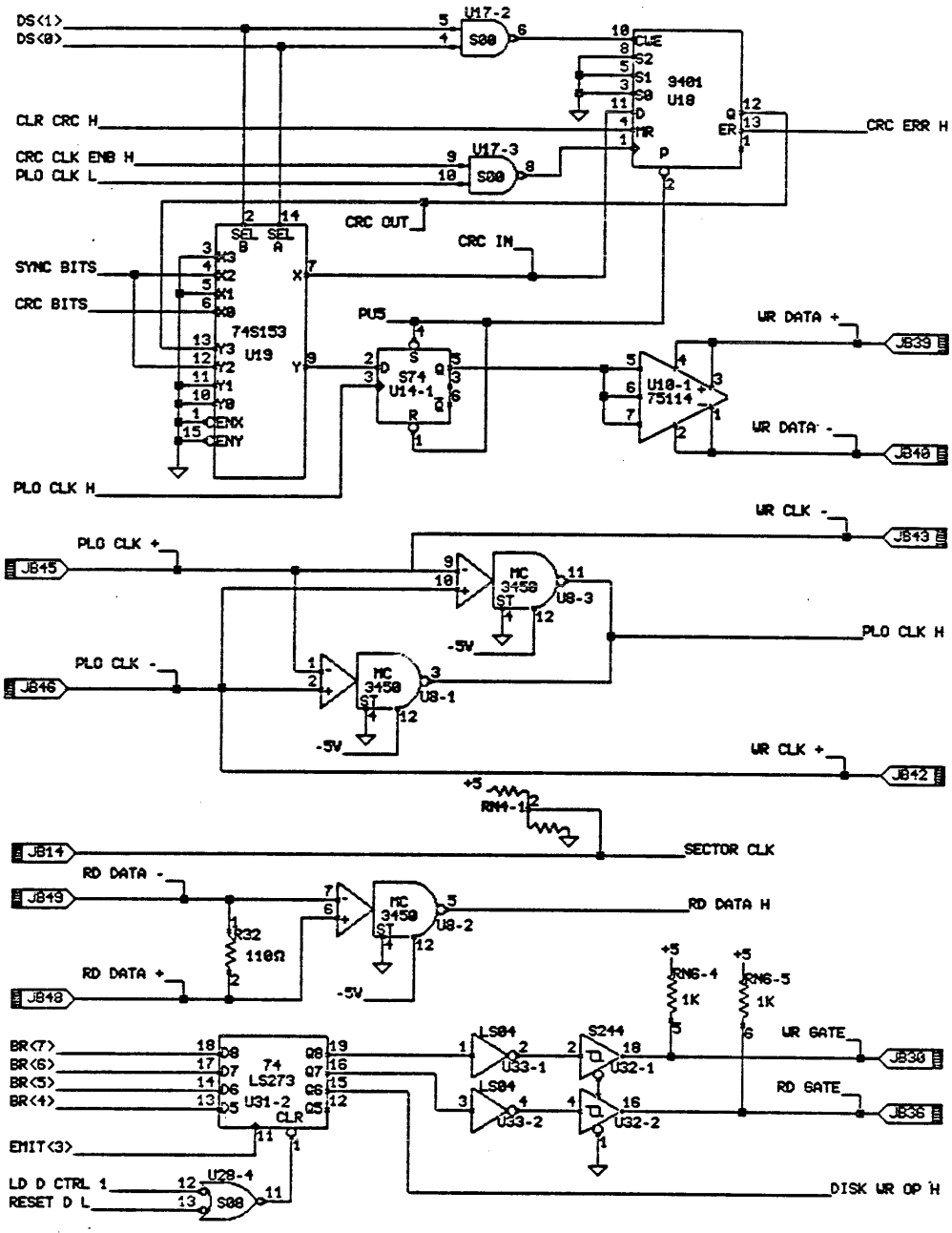

COPYRIGHT (c) 1984

THIS DOCUMENT IS NOT TO BE REPRODUCED IN ANY FORM OR TRANSMITTED IN WHOLE OR IN PART, WITHOUT PRIOR WRITTEN AUTHORIZATION OF PERQ SYSTEMS CORPORATION.

TITLE: DISK INYERFACE

e41.db

PERQ

DESIGNED	WCH		
DRAWN	13 Sep 82 16:45:01	SDakse	
UPDATED	FEB-23-84	STECK	

SIZE	CODE	IDENTIFICATION	VAR	REV
A	11	0193-	02	T

PROJ : NON ETHERNET I/O BOARD (NIO)

PAGE 41 OF 44

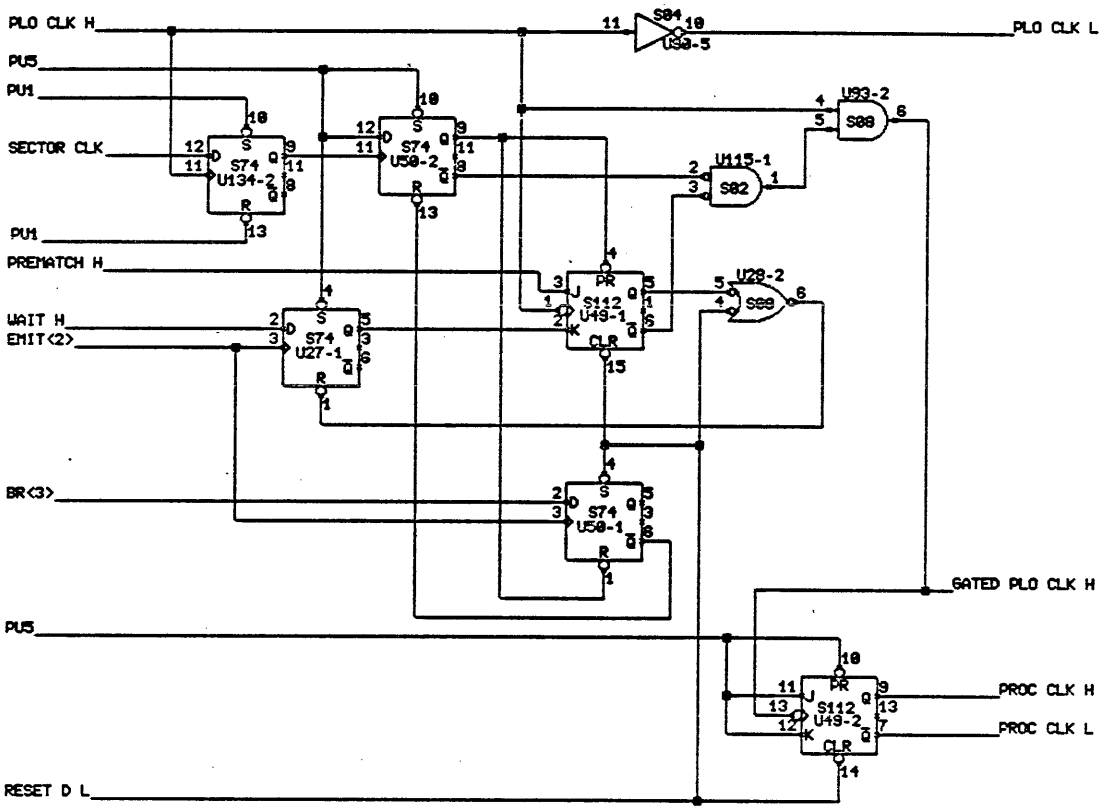

COPYRIGHT (c) 1984

THIS DOCUMENT IS NOT TO BE REPRODUCED IN ANY FORM OR TRANSMITTED IN WHOLE OR IN PART, WITHOUT PRIOR WRITTEN AUTHORIZATION OF PERQ SYSTEMS CORPORATION.

PERQ	TITLE	DISK CLOCK				e42.db		
	DESIGNED	UCH		SIZE	CODE	IDENTIFICATION	VAR	REV
	DRAWN	13 Sep 82 16:45:01	SBakse	A	11	0198-	02	T
	UPDATED	FEB-23-84	STECK	PROJ :	NON ETHERNET I/O BOARD (NIO)		PAGE 42	OF 44

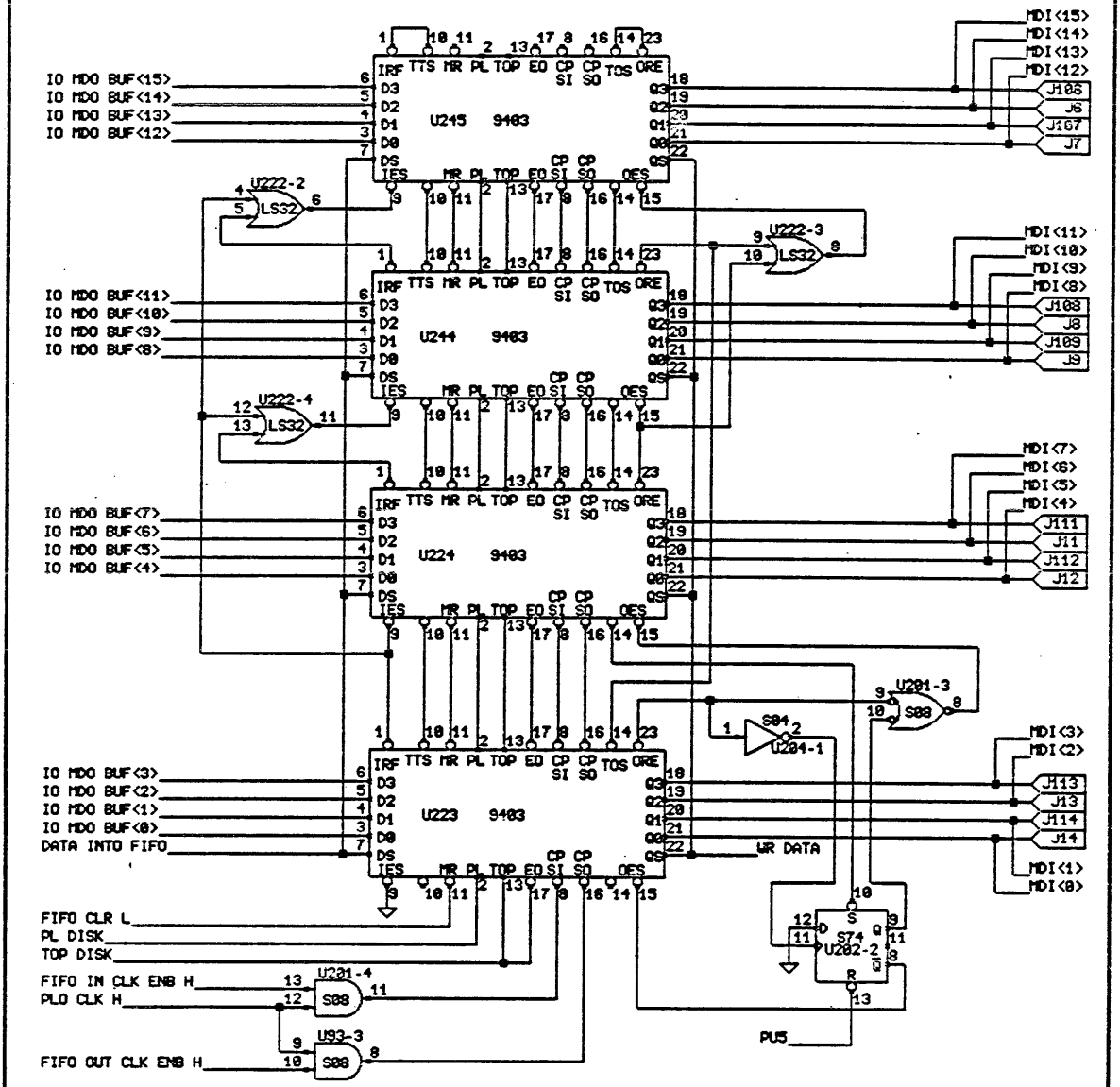

COPYRIGHT (c) 1984

THIS DOCUMENT IS NOT TO BE REPRODUCED IN ANY FORM OR TRANSMITTED IN WHOLE OR IN PART, WITHOUT PRIOR WRITTEN AUTHORIZATION OF PERQ SYSTEMS CORPORATION.

TITLE: DISK DATA BUFFERS

e43.db

PERQ

DESIGNED	WCH	
DRAWN	13 Sep 82 16:45:01	SBoise
UPDATED	FEB-23-84	STECK

SIZE	CODE	IDENTIFICATION	VAR	REV
A	11	0198-	02	T

PROJ : MON ETHERNET I/O BOARD (MIO)

PAGE 43 OF 44

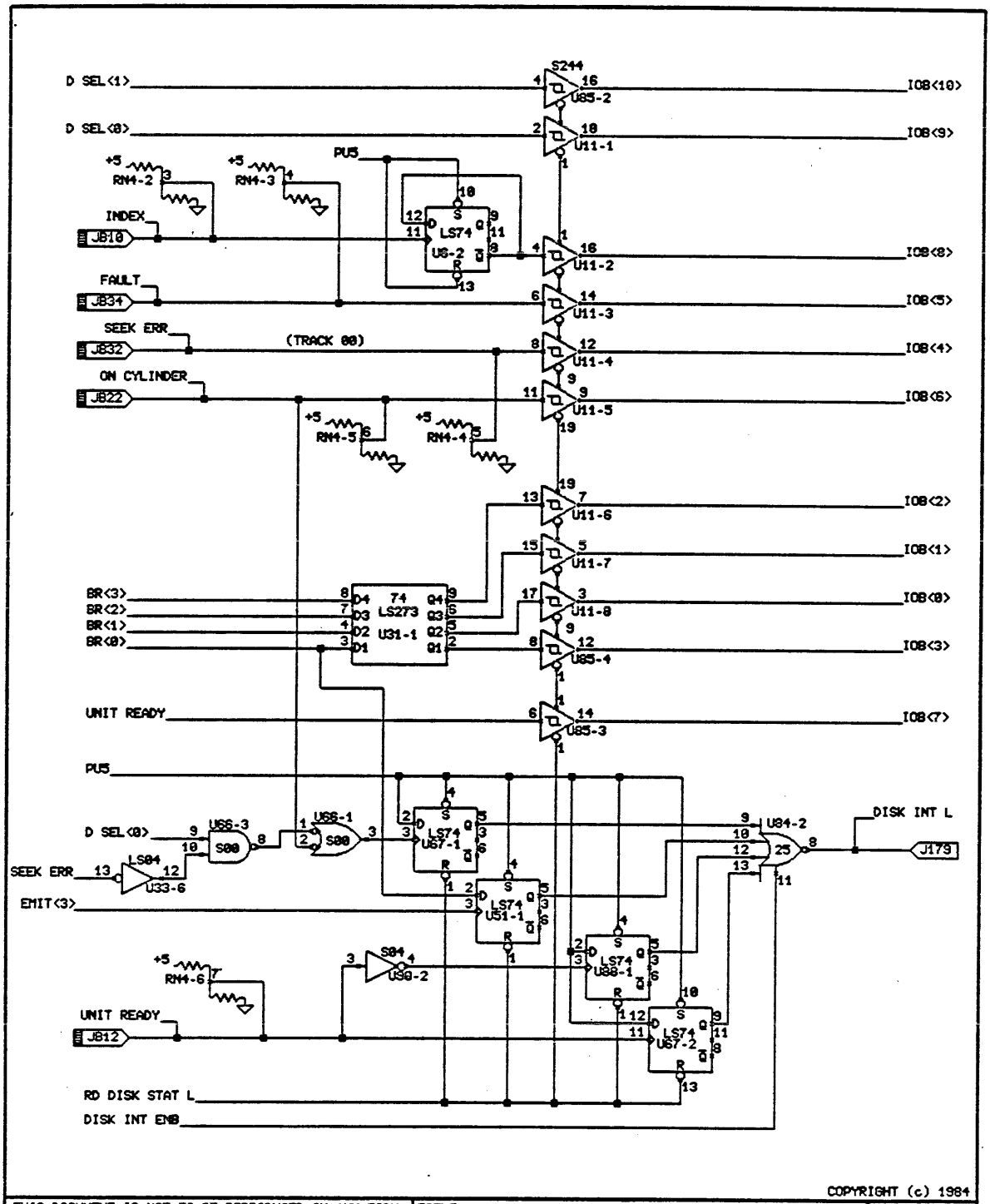

COPYRIGHT (c) 1984

THIS DOCUMENT IS NOT TO BE REPRODUCED IN ANY FORM OR TRANSMITTED IN WHOLE OR IN PART, WITHOUT PRIOR WRITTEN AUTHORIZATION OF PERQ SYSTEMS CORPORATION.

TITLE: DISK STATUS

e44.db

PERQ

DESIGNED	UCH		
DRAWN	13 Sep 82 16:45:01	SBokse	
UPDATED	FEB-23-84	STECK	

SIZE	CODE	IDENTIFICATION	VAR	REV
A	11	0198-	02	T

PROJ : NON ETHERNET I/O BOARD (NIO)

Part/Page Cross Reference 11 Feb 85 16:50:54

Using Files: E01.WL to E44.WL

PART..TYPE.....Pages Numbers

U1....2910.....36
U2....27S29.....37
U3....74LS273.....36
U4....74S157.....36
U5....27S29.....37
U6....74LS74.....44 36
U7....74S151.....37
U8....MC3450.....41 41 41
U9....74LS273.....39
U10...75114.....41
U11...74S244/1.....44 44 44 44 44 44 44 44
U12...74S240/1.....39 39 39 39 39 39 39 39
U13...74LS273.....39
U14...74S74.....41 38
U15...74S240/1.....18 18 18 18 18 18 18 18
U16...74S240/1.....18 18 18 18 18 18 18
U17...74S00.....41 41 6
U18...9401.....41
U19...74S153.....41
U21...74LS175.....18
U22...74LS153.....18
U23...74S32.....38 27 21 3
U24...27S29.....37
U25...74S11.....40 39 4
U26...27S29.....37
U27...74S74.....42 38
U28...74S08.....42 41 38 36
U29...74LS273.....40
U30...74LS377.....40
U31...74LS273/H.....44 41
U32...74S244/1.....41 41 30 30 30 30 12 12
U33...74LS04.....44 41 41 18 14 1
U34...74LS374.....38
U38...74LS164.....38
U39...25LS2521.....38
U40...74LS166.....38
U42...74S04.....31 31
U44...74LS138.....27
U45...COM14/1.....21 21 21 21 21 21 21 21 21 21 21
U46...74LS244/1.....21 21 21 21 19 12 12
U47...74S138.....37
U48...74S225..... 9
U49...74S112.....42 42
U50...74S74.....42 42
U51...74LS74.....44 40

U57...74S244/4.....30 1
U58...74LS157.....38
U59...74S189.....38
U60...74S189.....38
U62...MSM5832.....21
U64...74S225..... 9
U65...74LS373..... 9
U66...74S00.....44 44 38 37
U67...74LS74.....44 44
U68...74S225.....40
U77...74LS191.....38
U80...74LS273.....21
U81...74LS138.....27
U82...74LS04.....27 14 14 7
U83...74LS00.....27 9 7 7
U84...7425.....44
U85...74S244/1.....44 44 44 9 9
U86...9216.....19
U88...74LS74.....44 33
U89...VF150.....25
U90...74S04.....44 42 38 25
U91...74S51.....31
U93...74S08.....43 42
U99...2167.....23
U100..2167.....23
U101..2167.....23
U102..2167.....23
U103..2167.....23
U104..2167.....23
U105..2167.....23
U106..2167.....23
U107..74LS373.....14
U108..74S163.....25
U109..27S29..... 3
U110..74S374..... 3
U111..74LS273.....33
U112..74S240/1.....39 33 15 15
U114..74S139.....29 3
U115..74S02.....42 40 5
U118..74LS74..... 7 7
U122..2764.....26
U123..74LS161..... 7
U124..74LS74.....13 9
U125..PAL16L8.....26
U126..9519.....13
U127..8237.....14
U128..74S02.....18 9 7 3
U129..74LS175.....24
U130..74LS32.....12 12
U131..74LS04.....19 19 18 18 13 7
U132..74S51.....35 32
U133..74LS139.....27 7

U134..74S74.....42 31
U139..74S225.....11
U140..74S225.....11
U141..74S225.....11
U142..74S225.....11
U143..74LS153.....15
U144..Z80CPU.....12
U145..UPD765.....18
U146..74LS158..... 7
U147..9914.....17
U148..PAL16R8..... 4
U149..85S68..... 4
U150..PAL16L8..... 4
U151..74S112.....25 25
U152..74S225..... 8
U157..Z80SIO.....16
U158..Z80SIO.....15
U159..8254.....15
U160..8254.....16
U161..74S244/1.....24 15 12 12 8 8
U162..74S10..... 8 7 6
U163..74S151..... 4
U164..74S158..... 4
U165..74LS175..... 4
U166..74S32..... 5 3 3 3
U167..74S225..... 8
U168..74LS373.....22
U170..74S225.....10
U171..74S225.....10
U172..74LS08.....15 15 7 7
U173..74S74.....34 1
U174..74259.....27
U175..74LS166.....25
U176..74S00.....32 31 6 5
U178..74S175..... 3
U179..74S158..... 4
U180..74LS175..... 3
U181..74S138..... 3
U185..74S225.....10
U186..74S225.....10
U187..MC3417.....20
U188..75189.....15
U189..75188.....16
U190..75189.....15
U191..74S08..... 5 5 2
U192..74LS32.....16 15
U193..74S32.....34 16 15 5
U194..74LS74.....33 7
U195..74LS378..... 2
U196..2942.....34
U197..7643..... 2
U199..74LS174..... 2

U200..74S138..... 3
U201..74S08.....43 43 34 3
U202..74S74.....43 31
U203..74S138..... 3
U204..74S04.....43 24 24 3 3 3
U205..75189.....16
U207..75188.....15
U208..74S138.....28
U209..74S138.....28
U210..74LS161.....25
U211..PAL16L8.....35
U213..74LS151..... 2
U214..PAL16L8..... 6
U215..74S74..... 5
U216..74S288..... 5
U217..85S68..... 5
U218..85S68..... 5
U219..85S68..... 6
U220..85S68..... 6
U221..85S68..... 6
U222..74LS32.....43 43 43
U223..9403.....43
U224..9403.....43
U225..2912.....20
U227..LM380.....20
U228..74S04.....25 24 6 5 3
U230..PAL12L10.....28
U231..74LS245.....22
U232..74LS245.....22
U233..74S138.....28
U234..PAL16L8..... 6
U235..PAL16L8..... 6
U236..PAL16L8..... 5
U237..75162.....17
U238..75160.....17
U239..74S244..... 5
U240..74S244/4..... 6 6
U241..74S244..... 6
U242..74S374.....22
U243..74S374.....22
U244..9403.....43
U245..9403.....43
B1....BATTERY.....21
C19...CAP.....31
C35...TRIMCAP.....21
C36...CAP.....21
C103..CAP.....15
C121..CAP.....20
C124..CAP.....20
C125..CAP.....20
C126..CAP.....20
C135..CAP.....20

```
C136..CAP.....40
C137..CAP.....40
C139..CAP.....20
C153..CAP.....20
C159..CAP.....20
D1....DIODE.....21
D2....DIODE.....21
Q1....79L05.....40
R1....RES..... 2
R2....RES..... 2
R3....RES+5.....12
R4....RES.....15
R5....RES.....15
R6....RES.....20
R7....RES.....20
R8....RES.....20
R9....RES.....20
R10...RES.....20
R11...RES.....20
R12...RES.....20
R13...RES.....20
R29...RES.....31
R32...RES.....41
R35...RES.....21
RN1...COM10/1.....16 16 16 15 14 14 14 13 13
RN2...COM10/1.....36 31 25 13  7  2
RN3...COM10/1.....39 39 39 39 39 39 39
RN4...TERM10/1.....44 44 44 44 44 41
RN5...COM10/1.....19 18 18 18 18 18 18
RN6...COM10/1.....41 41 39 39 37 37 18 18 18
RN8...COM10/1.....16 12 12 12 12 12 12 12 12
RN9...12COM10/1.....16 16 15 15 15 15
RN10..COM10/1.....12 12 12 12 12 12 12 12
X2....XTAL.....21
J4....EDGE..... 3
J6....EDGE.....43
J7....EDGE.....43
J8....EDGE.....43
J9....EDGE.....43
J11...EDGE.....43
J12...EDGE.....43
J13...EDGE.....43
J14...EDGE.....43
J16...EDGE.....22
J17...EDGE.....22
J18...EDGE.....22
J19...EDGE.....22
J21...EDGE.....22
J22...EDGE.....22
J23...EDGE.....22
J24...EDGE.....22
J26...EDGE..... 6
```

J27...EDGE..... 6
J28...EDGE..... 6
J29...EDGE..... 6
J31...EDGE..... 6
J32...EDGE..... 6
J33...EDGE..... 5
J34...EDGE..... 5
J36...EDGE..... 5
J37...EDGE..... 3
J38...EDGE.....17
J39...EDGE.....35
J41...EDGE.....17
J42...EDGE.....17
J43...EDGE.....17
J44...EDGE.....17
J46...EDGE.....17
J47...EDGE.....17
J48...EDGE.....17
J53...EDGE..... 8
J54...EDGE..... 5
J56...EDGE.....22
J57...EDGE.....22
J58...EDGE.....22
J59...EDGE.....22
J61...EDGE.....22
J62...EDGE.....22
J63...EDGE.....22
J64...EDGE.....22
J66...EDGE.....28
J67...EDGE.....28
J68...EDGE.....28
J69...EDGE.....28
J71...EDGE.....28
J72...EDGE.....33
J73...EDGE..... 3
J74...EDGE..... 3
J81...EDGE.....20
J82...EDGE.....15
J83...EDGE.....15
J84...EDGE.....15
J86...EDGE.....15
J87...EDGE.....15
J88...EDGE.....16
J92...EDGE.....15
J93...EDGE.....15
J94...EDGE.....15
J99...EDGE.....31
J103..EDGE..... 2
J104..EDGE..... 3
J106..EDGE.....43
J107..EDGE.....43
J108..EDGE.....43

J109..EDGE.....43
J111..EDGE.....43
J112..EDGE.....43
J113..EDGE.....43
J114..EDGE.....43
J116..EDGE.....22
J117..EDGE.....22
J118..EDGE.....22
J119..EDGE.....22
J121..EDGE.....22
J122..EDGE.....22
J123..EDGE.....22
J124..EDGE.....22
J126..EDGE..... 6
J127..EDGE..... 6
J128..EDGE..... 6
J129..EDGE..... 6
J131..EDGE..... 6
J132..EDGE..... 6
J133..EDGE..... 5
J134..EDGE..... 5
J136..EDGE..... 5
J137..EDGE..... 3
J138..EDGE.....17
J139..EDGE.....17
J141..EDGE.....17
J142..EDGE.....17
J143..EDGE.....17
J144..EDGE.....17
J146..EDGE.....17
J147..EDGE.....17
J148..EDGE..... 5
J153..EDGE..... 2
J154..EDGE..... 2
J156..EDGE.....22
J157..EDGE.....22
J158..EDGE.....22
J159..EDGE.....22
J161..EDGE.....22
J162..EDGE.....22
J163..EDGE.....22
J164..EDGE.....22
J166..EDGE.....28
J167..EDGE.....28
J168..EDGE.....28
J169..EDGE.....28
J171..EDGE..... 2
J172..EDGE..... 9
J173..EDGE..... 2
J174..EDGE..... 2
J176..EDGE.....24
J178..EDGE..... 2

J179..EDGE.....44
J181..EDGE.....15
J182..EDGE.....15
J183..EDGE.....15
J184..EDGE.....15
J186..EDGE.....15
J187..EDGE.....16
J188..EDGE.....16
J189..EDGE.....16
J191..EDGE.....16
J192..EDGE.....16
J193..EDGE.....16
J196..EDGE.....16
J197..EDGE.....16
JA1...CABLE.....19
JA2...CABLE.....19
JA3...CABLE.....19
JA5...CABLE.....19
JA7...CABLE.....19
JA9...CABLE.....19
JA10..CABLE.....19
JA11..CABLE.....19
JA13..CABLE.....19
JA14..CABLE.....19
JA15..CABLE.....19
JA17..CABLE.....19
JA18..CABLE.....19
JA19..CABLE.....19
JA20..CABLE.....19
JA21..CABLE.....19
JA22..CABLE.....19
JA23..CABLE.....19
JA25..CABLE.....19
JA26..CABLE.....19
JA27..CABLE.....19
JA29..CABLE.....19
JA31..CABLE.....19
JA33..CABLE.....19
JA34..CABLE.....19
JA35..CABLE.....19
JA36..CABLE.....19
JA37..CABLE.....19
JA38..CABLE.....19
JA39..CABLE.....19
JA40..CABLE.....19
JA41..CABLE.....19
JA42..CABLE.....19
JA43..CABLE.....19
JA44..CABLE.....19
JA45..CABLE.....19
JA46..CABLE.....19
JA47..CABLE.....19

JA49..CABLE.....19
JB1...CABLE.....39
JB2...CABLE.....39
JB3...CABLE.....39
JB4...CABLE.....39
JB5...CABLE.....39
JB6...CABLE.....39
JB7...CABLE.....39
JB8...CABLE.....39
JB9...CABLE.....39
JB10..CABLE.....44
JB11..CABLE.....39
JB12..CABLE.....44
JB13..CABLE.....39
JB14..CABLE.....41
JB15..CABLE.....39
JB16..CABLE.....39
JB17..CABLE.....39
JB18..CABLE.....39
JB19..CABLE.....39
JB20..CABLE.....39
JB21..CABLE.....39
JB22..CABLE.....44
JB23..CABLE.....39
JB24..CABLE.....39
JB25..CABLE.....39
JB26..CABLE.....39
JB27..CABLE.....39
JB28..CABLE.....39
JB29..CABLE.....39
JB30..CABLE.....41
JB31..CABLE.....39
JB32..CABLE.....44
JB33..CABLE.....39
JB34..CABLE.....44
JB35..CABLE.....39
JB36..CABLE.....41
JB37..CABLE.....39
JB38..CABLE.....39
JB39..CABLE.....41
JB40..CABLE.....41
JB41..CABLE.....39
JB42..CABLE.....41
JB43..CABLE.....41
JB44..CABLE.....39
JB45..CABLE.....41
JB46..CABLE.....41
JB47..CABLE.....39
JB48..CABLE.....41
JB49..CABLE.....41
JB50..CABLE.....39
JP2...JUMPER.....37

JP3...JUMPER.....37

Signal/Page Cross Reference 11 Feb 85 16:50:54

Using Files: E01.WL to E44.WL

SIGNAL NAME	Pages Numbers
+12V	20 16 15
+5V	26 21 20 15
-12V	40 31 16 15
-5V	41 40 20
1 MHz	35 25
10 MHz H	25
10 MHz L	25
2 MHz	25 20
20 MHz	25
4 MHz	25 18 12
40 MHz	25
8 MHz	25 19 18
A<0>	27 26 23 18 17 16 15 13 12
A<10>	26 23 14 12
A<11>	26 23 14 12
A<12>	26 23 14 12
A<13>	26 23 14 12
A<14>	26 14 12
A<15>	26 14 12
A<1>	27 26 23 17 16 15 12
A<2>	27 26 23 17 12
A<3>	27 26 23 12
A<4>	27 26 23 14 12
A<5>	27 26 23 14 12
A<6>	27 26 23 14 12
A<7>	27 26 23 14 12
A<8>	26 23 14 12
A<9>	26 23 14 12
AD15	1
ADDR DATA<0>	37 36
ADDR DATA<1>	37 36
ADDR DATA<2>	37 36
ADDR DATA<3>	37 36
ADDR DATA<4>	37 36
ADDR DATA<5>	37 36
ADDR DATA<6>	37 36
ADDR DATA<7>	37 36
ADDR DATA<8>	37 36
ADDR<0>	6 5 4
ADDR<1>	6 5 4
ADDR<2>	6 5 4
ADDR<3>	6 5 4
B<0>	39
B<1>	39
B<2>	39

B<3>.....39
BA<0>.....39
BA<1>.....39
BC INSTR ENB.....35
BC INSTR<0>.....35
BC INSTR<1>.....35
BC INSTR<2>.....35
BR<0>.....44 40 38 37
BR<1>.....44 40 38 37
BR<2>.....44 40 38 37
BR<3>.....44 42 40 38 37
BR<4>.....41 40 38 37
BR<5>.....41 40 38 37
BR<6>.....41 40 38 37
BR<7>.....41 40 38 37
BUF D<0>.....22 10 8
BUF D<1>.....22 10 8
BUF D<2>.....22 10 8
BUF D<3>.....22 10 8
BUF D<4>.....22 10 8
BUF D<5>.....22 10 8
BUF D<6>.....22 10 8
BUF D<7>.....22 10 8
BUS ACK L.....26 15 14 12
BUS CTRL..... 7
BUS ENB.....39
BUS RQST L.....14 12
BUSY..... 1
C/P ENB H..... 6 5
CAR SENSE L.....31
CLK IN H.....11 7
CLK IN L.....11 7
CLK OUT H.....10 7
CLK OUT L.....10 7
CLK-4F.....32 24 11 9 5
CLK-7R.....24
CLKOR.....38 34 28 24 22
CLKORB.....24 6 5 4 3 2
CLR CRC H.....41 38
CO<1>..... 6 5
CO<2>..... 6
COM NET INT L.....35
CRC BITS.....41 38
CRC CLK ENB H.....41 40
CRC ERR H.....41 37
CRC IN.....41
CRC OUT.....41
D GRANT H..... 3 2
D MEM RD L.....26 14
D MEM WR L.....26 14
D SEL<0>.....44 37
D SEL<1>.....44 37

```
D<0>.....27 26 23 22 21 18 17 16 15 14 13 12 11  9
D<1>.....26 23 22 21 18 17 16 15 14 13 12 11  9
D<2>.....26 23 22 21 18 17 16 15 14 13 12 11  9
D<3>.....26 23 22 21 18 17 16 15 14 13 12 11  9
D<4>.....26 23 22 21 18 17 16 15 14 13 12 11  9
D<5>.....26 23 22 21 18 17 16 15 14 13 12 11  9
D<6>.....26 23 22 21 18 17 16 15 14 13 12 11  9
D<7>.....26 23 22 18 17 16 15 14 13 12 11  9
DA<0>.....14 12
DA<1>.....14 12
DA<2>.....14 12
DA<3>.....14 12
DATA INTO FIFO.....43 38
DIR L.....19 18
DISK CC L.....37 36
DISK INT ENB.....44 39
DISK INT L.....44
DISK RQST H.....40  2
DISK WR H.....40  2
DISK WR OP H.....41 40
DMA ACK L.....14  7
DMA FIFO L..... 7
DMA IR.....10  7
DMA OR.....11  7
DMA RQST L.....14  7
DP IO RQST L.....26 15
DRIVE SEL<0>.....39
DRIVE SEL<1>.....39
DS<0>.....41 40
DS<1>.....41 40
EMIT NOW.....37
EMIT<1>.....38 37
EMIT<2>.....42 40 37
EMIT<3>.....44 41 37
EMIT<6>.....40 37
ENB BIT CNT H.....33 32
ENB IN FIFO<0> L.....29
ENB IN FIFO<1> L.....29
ENB MA H..... 5  3
ENB NET FIFO L.....29
ENB NET INT H.....35 33
ENB PL..... 3
ENB TOP..... 3
ENB USEC CLK H.....35 33
ENB USEC INT H.....35 33
END DMA INT.....26 13  7
EOP L.....18 14 13  7
EXT A RQST H..... 2
EXT A WR H..... 2
EXT ADDR L.....24  5
EXT B RQST H..... 2
EXT B WR H..... 2
```

F<0>.....39 36
F<1>.....39 36
F<2>.....39 36
FA<0>.....38
FA<1>.....38
FA<2>.....38
FA<3>.....38
FAULT.....44
FIFO CLR L.....43 40
FIFO IN CLK ENB H.....43 40
FIFO OUT CLK ENB H.....43 40
FLOP ACK L.....18 14
FLOP INDEX L.....19 18
FLOP INT.....18 13
FLOP RD DATA L.....19
FLOP RDY L.....19 18
FLOP RQST L.....18 14
FLOP RW.....18
FLOP SEP DATA.....19 18
FLOP SK.....18
FLOP TK<0> L.....19 18
FLOP TWO SIDED L.....19 18
FLOP WINDOW.....19 18
FLOP WR DATA L.....19 18
FLOP WR ENB L.....19 18
FLOP WR PRO L.....19 18
FLUSH L.....11 10 7
FP CLK L..... 1
FP INT..... 1
FR..... 1
FR L..... 1
FS..... 1
GATED 1MHz.....35 34
GATED PACKET CLK L.....32
GATED PLO CLK H.....42 37
GND.....43 41 41 40 39 39 39 39 38 37 36 34 33 31 29 28 26
GND.....25 24 22 21 20 20 19 19 19 18 16 15 13 12 9 7 6
GND..... 5 4 3
GO H.....33
GPIB ACK L.....17 14
GPIB ATN.....17
GPIB DAV.....17
GPIB DI<1>.....17
GPIB DI<2>.....17
GPIB DI<3>.....17
GPIB DI<4>.....17
GPIB DI<5>.....17
GPIB DI<6>.....17
GPIB DI<7>.....17
GPIB DI<8>.....17
GPIB EOI.....17
GPIB IFC.....17

```
GPIB INT L.............17 13
GPIB NDAC..............17
GPIB NRFD..............17
GPIB PE................27 17
GPIB RD................26 17
GPIB REN...............17
GPIB RQST L............17 14
GPIB SC................27 17
GPIB SRQ...............17
GRANT DMA.............. 3  2
HDCAR.................. 5  4
HEAD LD L..............19 18
HOLD OFF L............. 5
ICLK-4R................24  6  3
IDS<0>.................40 38
IDS<1>.................40 38
INDEX..................44
INIT L.................39 36 33 24
INT ENB................16 13
IO MDO BUF<0>..........43 22 11
IO MDO BUF<10>.........43 22 11
IO MDO BUF<11>.........43 22 11
IO MDO BUF<12>.........43 22 11
IO MDO BUF<13>.........43 22 11
IO MDO BUF<14>.........43 22 11
IO MDO BUF<15>.........43 22 11
IO MDO BUF<1>..........43 22 11
IO MDO BUF<2>..........43 22 11
IO MDO BUF<3>..........43 22 11
IO MDO BUF<4>..........43 22 11
IO MDO BUF<5>..........43 22 11
IO MDO BUF<6>..........43 22 11
IO MDO BUF<7>..........43 22 11
IO MDO BUF<8>..........43 22 11
IO MDO BUF<9>..........43 22 11
IO MEM RQST............ 3  2  2
IO MEM WR.............. 3  2
IO SEL H............... 5  4
IO SEL L............... 6  5  4
IOA<0>.................35 34 28  5
IOA<1>.................35 34 28  5  4
IOA<2>.................28
IOA<3>.................28
IOA<4>.................28
IOA<5>.................28
IOA<6>.................28
IOA<7>.................35 28 22
IOB BUF ENB L..........28 22
IOB ENB L..............28
IOB<0>.................44 39 38 34 33 24 22  9  8  6  4  1
IOB<10>................44 22  6
IOB<11>................22  6
```

```
IOB<12>.....22  6
IOB<13>.....22  6
IOB<14>.....22  6
IOB<15>.....22  8  6  1
IOB<1>.....44 39 38 34 33 24 22  9  8  6  4  1
IOB<2>.....44 39 38 34 33 24 22  9  8  6  5  4
IOB<3>.....44 39 38 34 33 24 22  9  8  6  5  4
IOB<4>.....44 39 38 34 33 22  9  8  5  4
IOB<5>.....44 39 38 34 33 22  9  8  5  4
IOB<6>.....44 39 38 34 33 22  9  8  5  4
IOB<7>.....44 39 38 34 33 22  9  8  6  4  1
IOB<8>.....44 33 22  6
IOB<9>.....44 22  6
IOD OUT FIFO..... 9  8
IOD OUT RDY.....27  8
IOD<0>.....22
IOD<10>.....22
IOD<11>.....22
IOD<12>.....22
IOD<13>.....22
IOD<14>.....22
IOD<15>.....22
IOD<1>.....22
IOD<2>.....22
IOD<3>.....22
IOD<4>.....22
IOD<5>.....22
IOD<6>.....22
IOD<7>.....22
IOD<8>.....22
IOD<9>.....22
J ADDR<0>.....30
J ADDR<1>.....30
J ADDR<2>.....30
J ADDR<3>.....30
JMP<0>.....37 36
JMP<1>.....37 36
JMP<2>.....37 36
JMP<3>.....37 36
KBD DATA H.....16
LATCH BUF D.....22  7
LD BIT CNT L.....35 32 28
LD D CTRL 1.....41 39 28
LD D CTRL 2.....39 28
LD DF CNTR L.....38 28
LD DF DATA L.....38 28
LD DMA ADDR L.....28  5
LD DMA CHAN L.....28  4
LD FP INST L.....28
LD INT ENB L.....28 24
LD NET CTRL L.....33 28
LD NET ENB L.....33 28
```

LD NET FILE L.....28
LD UPROC DATA L.....28 9
LD USEC CLK L.....35 34 28
LDSR.....38 37
LOW CUR L.....19 18
M1 L.....27 16 15 13 12
MA EXT A..... 5
MA OUT L..... 6 5
MADDR<10>..... 6
MADDR<11>..... 6
MADDR<12>..... 6
MADDR<13>..... 6
MADDR<14>..... 6
MADDR<15>..... 6
MADDR<16>..... 6
MADDR<17>..... 6
MADDR<18>..... 6
MADDR<19>..... 6
MADDR<2>..... 5
MADDR<3>..... 5
MADDR<4>..... 5
MADDR<5>..... 5
MADDR<6>..... 5
MADDR<7>..... 5
MADDR<8>..... 6
MADDR<9>..... 6
MATCH H.....38 37
MDI<0>.....43 10
MDI<10>.....43 10
MDI<11>.....43 10
MDI<12>.....43 10
MDI<13>.....43 10
MDI<14>.....43 10
MDI<15>.....43 10
MDI<1>.....43 10
MDI<2>.....43 10
MDI<3>.....43 10
MDI<4>.....43 10
MDI<5>.....43 10
MDI<6>.....43 10
MDI<7>.....43 10
MDI<8>.....43 10
MDI<9>.....43 10
MDO<0>.....22
MDO<10>.....22
MDO<11>.....22
MDO<12>.....22
MDO<13>.....22
MDO<14>.....22
MDO<15>.....22
MDO<1>.....22
MDO<2>.....22

MDO<3>.....22
MDO<4>.....22
MDO<5>.....22
MDO<6>.....22
MDO<7>.....22
MDO<8>.....22
MDO<9>.....22
MFM.....25 19 18
NET INT H.....35
NET INT L.....33
NET RQST H..... 2
NET WR H..... 2
ODD..... 7
ON CYLINDER.....44
P IO RQST L.....27 26 16 12
P MEM RQST L.....26 13 12
P RESET L.....39 36
P WR L.....14 12
PALR7..... 6 5
PERQ INT.....13 9
PHDCAR..... 4
PL DISK.....43 3
PL EXT A..... 3
PL EXT B..... 3
PL NET..... 3
PL UPROC.....11 3
PLO CLK +.....41
PLO CLK -.....41
PLO CLK H.....43 42 41 40 38
PLO CLK L.....42 41 38
PREMATCH H.....42 38
PROC CLK H.....42 38 37
PROC CLK L.....42 40 36
PROM CS L.....26
PU1.....42 28 27 15 13 9 8 1
PU3.....15 10 7
PU4..... 5 4 3 2
PU5.....44 43 42 41 40 38 37 36
PU6.....34 31
PU7.....33
R<10>..... 6
R<11>..... 6
R<12>..... 6
R<13>..... 6
R<14>..... 6
R<15>..... 6
R<16>..... 6
R<17>..... 6
R<18>..... 6
R<19>..... 6
R<2>..... 5
R<3>..... 5

R<4>..... 5
R<5>..... 5
R<6>..... 5
R<7>..... 6 5
R<8>..... 6
R<9>..... 6
RA<1>..... 4 3 2
RA<2>..... 4 3 2
RA<3>..... 4 3 2
RAM CS L.....26 23
RAM WE L.....26 23
RCV ALL.....33
RCV CLK H.....31
RCV CLK L.....31
RD BIT CNT L.....35 28
RD DATA +.....41
RD DATA -.....41
RD DATA H.....41 38
RD DISK STAT L.....44 44 28
RD FP RESULT L.....28
RD FP STAT L.....28 1
RD GATE.....41
RD L.....26 21 18 16 15 14 13 12 7
RD NET STAT L.....28
RD UPROC DATA L.....28 13 8
RD UPROC STAT L.....28 8
RD USEC CLK L.....35 34 28
RESET D L.....42 41 40 36
RESET FIFO & CRC L.....35 32
RESET H.....24 18 14
RESET L.....27 24 21 17 16 15 12 9 8 7
RESET NET H.....33
RESET NET L.....33
RS232 CD A.....15
RS232 CD B.....16
RS232 CTS A.....15
RS232 CTS B.....16
RS232 DTR A.....15
RS232 DTR B.....16
RS232 RC IN A.....15
RS232 RC IN B.....16
RS232 RD A.....15
RS232 RD B.....16
RS232 RQST L.....15
RS232 RTS A.....15
RS232 RTS B.....16
RS232 TC IN A.....15
RS232 TC IN B.....15
RS232 TC OUT A.....15
RS232 TC OUT B.....16
RS232 TD A.....15
RS232 TD B.....16

RVC DATA OUT.....31
RW..... 4 3
RWA<1>..... 4
RWA<2>..... 4
RWA<3>..... 4
S CLK 1..... 3
S CLK 3..... 5 3
S TIME<0>..... 3
S TIME<1>..... 3
SECTOR CLK.....42 41
SEEK ERR.....44
SEL CLK CTRL L.....27 21
SEL CLK DATA L.....27 21
SEL CTC A L.....27 15
SEL CTC B L.....27 16
SEL DMA FLUSH L.....27 7
SEL DMA L.....27 14
SEL DMA START L.....27 7
SEL FLOPPY L.....27 18
SEL GPIB L.....27 17
SEL INT L.....27 13
SEL IOD RD L.....27 9
SEL IOD STAT L.....27 9
SEL IOD WR L.....27 8 7
SEL SIO A L.....27 15
SEL SIO B L.....27 16
SEL USEC CLK L.....35 34
SIDE SEL L.....19 18
SIO ACK L.....15 14
SIO INT ENB.....16 15
SIO RQST L.....15 14
SMA<0>.....40 36
SMA<1>.....40 36
SMD ADDR<0>.....37 36
SMD ADDR<1>.....37 36
SMD ADDR<2>.....37 36
SMD ADDR<3>.....37 36
SMD ADDR<4>.....37 36
SMD ADDR<5>.....37 36
SMD ADDR<6>.....37 36
SMD ADDR<7>.....37 36
SMD ADDR<8>.....37 36
SPEAK DATA IN.....20 15
SPEAKER.....20
SPEECH CLK.....20 15
SPEECH RQST L.....15
SPEECH SEL L.....27 15
STEP L.....19 18
SYNC BITS.....41 38
T BIT.....39 37
T2 BIT.....39 37
TABLET CLK.....15

TABLET DATA L.....15
TC IN B.....16
TESTCLK.....27 21
TOP DISK.....43 3
TOP EXT A L..... 3
TOP EXT B L..... 3
TOP NET..... 3
TOP UPROC.....10 3
TRANSMIT H.....33
TZ CLK.....17 16 15 14 13 12 9 7
UNIT READY.....44
UNIT SEL L.....19 18
UNLD DISK RQST L.....40 3
UNLD EXT A RQST L..... 5 3
UNLD EXT B RQST L..... 3
UNLD NET RQST L..... 3
UNLD UPROC RQST L..... 7 3
UPROC ENB.....24 8
UPROC INT L..... 8
UPROC RDY..... 9 8
UPROC RDY ENB.....24 9
UPROC RDY INT L..... 9
UPROC RQST H..... 7 2
UPROC WR H.....27 7 2
USEC CLK OVFL H.....35 34
USEC I<2>.....35 34
WA<1>..... 4 3
WA<2>..... 4 3
WA<3>..... 4 3
WAIT H.....42 37
WCLK.....25 18
WCNT L..... 5 4
WHI L..... 6 5
WLO L..... 6 5
WR CLK +.....41
WR CLK -.....41
WR DATA.....43 38
WR DATA +.....41
WR DATA -.....41
WR GATE.....41
WR L.....27 26 18 17 16 15 13 12 7
WREG L..... 5 4
X CONST ENB L.....30 29
X MUX<0>.....30
X MUX<1>.....30
X MUX<2>.....30
X MUX<3>.....30
X SEL<0>.....29
X SEL<1>.....29
Y MUX<0>.....30
Y MUX<1>.....30
Y MUX<2>.....30

```
Y MUX<3>.................30
Y SEL<3>.................30
Z CLK....................16 15 12
Z80 INT L................16 15 13 12
Z80 WAIT L...............14 12
```

This Run Was made using the following files:

110198.PART
e44.WL
e43.WL
e42.WL
e41.WL
e40.WL
e39.WL
e38.WL
e37.WL
e36.WL
e35.WL
e34.WL
e33.WL
e32.WL
e31.WL
e30.WL
e29.WL
e28.WL
e27.WL
e26.WL
e25.WL
e24.WL
e23.WL
e22.WL
e21.WL
e20.WL
e19.WL
e18.WL
e17.WL
e16.WL
e15.WL
e14.WL
e13.WL
e12.WL
e11.WL
e10.WL
e09.WL
e08.WL
e07.WL
e06.WL
e05.WL
e04.WL
e03.WL
e02.WL
e01.WL

Number Of Nets = 924
Begin Wirelist

```
1: R35-2 B1-1                                   .%B1-1

2: U200-4 U109-19 U203-4 U181-4 U109-15
2: U110-1 U181-5 U203-5 U164-15 U163-7
2: U149-3 U149-12 U150-13 U148-11 U218-12
2: U217-12 U215-2 U217-1 U236-13 U216-15
2: U217-2 U220-12 U221-12 U219-12 U146-15
2: U123-4 U146-2 U146-13 U146-3 U123-6
2: U123-5 U65-1 U46-1 U126-24 U126-25
2: C103-2 U158-22 U143-1 U112-19 U143-15
2: U143-4 U158-23 U157-22 U157-23 U22-1
2: U22-3 U16-19 U15-19 U86-6 JA43-1
2: JA41-1 JA39-1 JA37-1 JA35-1 JA33-1
2: JA31-1 JA29-1 JA3-1 JA1-1 JA5-1 JA7-1
2: JA9-1 JA25-1 JA23-1 JA21-1 JA19-1
2: JA17-1 JA15-1 JA13-1 JA11-1 JA27-1
2: JA45-1 JA47-1 JA49-1 U187-15 R7-2
2: C139-2 C159-2 U227-3 U225-15 U225-13
2: R12-2 C121-2 R13-2 U225-1 U225-2
2: U227-4 U227-5 U227-10 U227-11 U227-12
2: U227-7 U227-6 B1-2 C36-1 C35-1 U168-1
2: U242-1 U243-1 U161-1 U108-3 U108-4
2: U175-7 U175-3 U175-4 U175-5 U175-11
2: U175-14 U175-12 U122-22 U233-5 U230-13
2: U230-10 U230-11 U114-15 C19-2 U196-1
2: U1-27 U4-15 U1-29 U1-25 U1-23 U1-13
2: U47-5 JP3-1 U7-7 JP2-1 U7-4 U5-15
2: U26-15 U2-15 U24-15 U58-15 U34-1
2: U39-1 U77-4 U77-5 U60-2 U59-2 U112-1
2: JB33-1 U12-1 U12-19 JB35-1 JB37-1
2: JB38-1 JB1-1 JB3-1 JB5-1 JB7-1 JB9-1
2: JB11-1 JB13-1 JB15-1 JB17-1 JB19-1
2: JB21-1 JB23-1 JB25-1 JB27-1 JB29-1
2: JB31-1 JB41-1 JB44-1 JB47-1 JB50-1
2: C137-2 Q1-1 C136-2 U68-9 U19-5 U19-3
2: U19-11 U19-10 U19-15 U19-1 U32-1
2: U8-4 U18-3 U18-5 U18-8 U223-9 U202-12
2:                                              .!GND

3: R12-1 C125-2                                 .%C125-2

4: U225-4 C135-1                                .%C135-1

5: R6-1 C135-2                                  .%C135-2

6: C124-1 U187-7 R8-1 C153-1                    .%C153-1

7: U225-10 C153-2                               .%C153-2

8: U62-1 D1-2 D2-2                              .%D2-2

9: C19-1 R29-1                                  .%R29-1
```

10: D2-1 R35-1	.%R35-1
11: R6-2 U227-2 R7-1	.%R7-1
12: U16-4 RN5-5	.%RN5-5
13: U205-5 RN9-5	.%RN9-5
14: U188-12 RN9-7	.%RN9-7
15: U188-9 RN9-8	.%RN9-8
16: U190-12 RN9-9	.%RN9-9
17: U4-10 U1-35	.%U1-35
18: U4-13 U1-37	.%U1-37
19: U10-5 U14-5 U10-6 U10-7	.%U10-7
20: U33-6 U107-1	.%U107-1
21: U127-8 U107-11	.%U107-11
22: U108-11 U108-9	.%U108-9
23: U31-6 U11-15	.%U11-15
24: U6-12 U6-8 U11-4	.%U11-4
25: U109-11 U110-13	.%U110-13
26: U109-12 U110-14	.%U110-14
27: U109-13 U110-17	.%U110-17
28: U109-14 U110-18	.%U110-18
29: U109-1 U110-2	.%U110-2
30: U109-6 U110-3	.%U110-3
31: U109-7 U110-4	.%U110-4
32: U109-2 U110-5	.%U110-5
33: U109-8 U110-7	.%U110-7
34: U109-9 U110-8	.%U110-8
35: U93-5 U115-1	.%U115-1

36: U50-8 U115-2	.%U115-2
37: U49-6 U115-3	.%U115-3
38: U118-12 U118-5	.%U118-5
39: U13-5 U12-2	.%U12-2
40: U13-19 U12-8	.%U12-8
41: U82-3 U123-11	.%U123-11
42: U82-4 U83-4 U123-9	.%U123-9
43: U126-26 U124-5	.%U124-5
44: U128-2 U124-8	.%U124-8
45: RN1-3 U126-12	.%U126-12
46: U82-5 U127-10	.%U127-10
47: U82-8 U127-7	.%U127-7
48: U203-10 U128-8	.%U128-8
49: U12-13 U13-12	.%U13-12
50: U12-11 U13-15	.%U13-15
51: U112-6 U13-16	.%U13-16
52: U12-4 U13-2	.%U13-2
53: U12-17 U13-6	.%U13-6
54: U12-15 U13-9	.%U13-9
55: U16-11 U131-10	.%U131-10
56: U145-29 U131-11	.%U131-11
57: U145-39 U131-13	.%U131-13
58: U86-5 U131-2	.%U131-2
59: U162-1 U131-4	.%U131-4
60: U126-22 U131-8	.%U131-8
61: U44-10 U133-1	.%U133-1

62: U42-4 U134-3	.%U134-3
63: U19-9 U14-2	.%U14-2
64: RN8-3 U144-17	.%U144-17
65: U130-9 U130-10 U144-27	.%U144-27
66: U128-4 U145-16	.%U145-16
67: U15-15 U145-36	.%U145-36
68: U172-5 U146-12	.%U146-12
69: U238-1 U237-2 U147-21	.%U147-21
70: U25-6 U148-7	.%U148-7
71: U150-18 U149-1	.%U149-1
72: U150-2 U149-10	.%U149-10
73: U150-3 U149-11	.%U149-11
74: U150-16 U149-16	.%U149-16
75: U150-17 U149-17	.%U149-17
76: U150-19 U149-2	.%U149-2
77: U150-11 U149-7	.%U149-7
78: U150-1 U149-8	.%U149-8
79: U145-33 U16-16 U15-16	.%U15-16
80: U145-27 U15-17	.%U15-17
81: U145-34 U16-18 U15-18	.%U15-18
82: U145-35 U15-7	.%U15-7
83: U145-37 U15-8	.%U15-8
84: U145-17 U15-9	.%U15-9
85: RN8-10 U157-11	.%U157-11
86: U205-8 U157-12	.%U157-12
87: U189-4 U157-16	.%U157-16

88: U205-3 U157-18 .%U157-18

89: U205-6 U157-19 .%U157-19

90: RN1-8 U158-11 .%U158-11

91: U190-8 U158-12 .%U158-12

92: U192-3 U158-13 .%U158-13

93: U207-9 U158-16 .%U158-16

94: U190-3 U158-18 .%U158-18

95: U190-6 U158-19 .%U158-19

96: U112-7 U158-29 .%U158-29

97: U172-8 U158-33 .%U158-33

98: U143-7 U158-34 .%U158-34

99: U172-11 U158-35 .%U158-35

100: U158-28 U161-4 U112-8 U158-27 U159-13
100: .%U159-13

101: U193-4 U159-17 .%U159-17

102: U22-7 U16-17 .%U16-17

103: U145-38 U15-6 U16-8 .%U16-8

104: U157-28 U157-27 U160-13 .%U160-13

105: U160-14 RN1-5 U160-11 U160-16 .%U160-16

106: R5-2 U161-16 .%U161-16

107: U152-17 U162-3 .%U162-3

108: U234-13 U162-8 .%U162-8

109: U148-16 U163-1 .%U163-1

110: U148-13 U163-13 .%U163-13

111: U148-14 U163-14 .%U163-14

112: U148-15 U163-15 .%U163-15

```
113: U148-17 U163-2                          .%U163-2
114: U148-18 U163-3                          .%U163-3
115: U148-19 U163-4                          .%U163-4
116: U165-10 U164-11                         .%U164-11
117: U165-2 U164-2                           .%U164-2
118: U165-7 U164-5                           .%U164-5
119: U181-9 U166-13                          .%U166-13
120: U123-1 U172-6                           .%U172-6
121: U196-20 U173-2                          .%U173-2
122: U201-6 U196-10 U173-3                   .%U173-3
123: U173-1 U173-5                           .%U173-5
124: U202-6 U176-1                           .%U176-1
125: U132-10 U176-11                         .%U176-11
126: U42-1 U176-3                            .%U176-3
127: U17-8 U18-1                             .%U18-1
128: U17-6 U18-10                            .%U18-10
129: U166-4 U181-10                          .%U181-10
130: U166-9 U181-14                          .%U181-14
131: R10-2 R9-1 U187-11                      .%U187-11
132: C121-1 R13-1 U187-10 U187-5 U187-12
132:                                         .%U187-12
133: R9-2 U187-3                             .%U187-3
134: R11-2 U187-4                            .%U187-4
135: C124-2 R8-2 U187-6                      .%U187-6
136: RN1-7 U189-12 U189-5 U189-10            .%U189-10
137: U157-15 U189-2                          .%U189-2
138: U157-17 U189-9                          .%U189-9
```

139: U192-2 U190-11	.%U190-11
140: RN9-6 U190-5	.%U190-5
141: U195-11 U191-11	.%U191-11
142: U199-15 U191-13	.%U191-13
143: U215-6 U191-5	.%U191-5
144: U159-10 U192-1	.%U192-1
145: U189-13 U157-14 U192-11	.%U192-11
146: U160-17 U192-13	.%U192-13
147: U160-10 U193-1	.%U193-1
148: U215-4 U193-11	.%U193-11
149: U205-11 U193-2	.%U193-2
150: U157-13 U193-3	.%U193-3
151: U188-8 U193-5	.%U193-5
152: U83-6 U194-11	.%U194-11
153: U197-17 U195-10	.%U195-10
154: U197-16 U195-12	.%U195-12
155: U197-3 U195-2	.%U195-2
156: U197-2 U195-5	.%U195-5
157: U197-1 U195-7	.%U195-7
158: U196-3 U196-2	.%U196-2
159: U213-9 U199-6 U197-12	.%U197-12
160: U199-4 U213-10 U197-13	.%U197-13
161: U199-3 U213-11 U197-14	.%U197-14
162: U199-12 U197-15	.%U197-15
163: U201-1 U200-11	.%U200-11
164: U200-14 U201-2	.%U201-2

165: U193-8 U201-4 .%U201-4

166: U224-15 U201-8 .%U201-8

167: U245-23 U245-14 U244-14 U224-14 U202-10
167: .%U202-10

168: U204-2 U202-11 .%U202-11

169: U223-15 U202-8 .%U202-8

170: U201-10 U202-9 .%U202-9

171: U180-2 U203-1 .%U203-1

172: U204-5 U203-12 .%U203-12

173: U180-7 U203-2 .%U203-2

174: U180-10 U203-3 .%U203-3

175: U204-9 U203-9 .%U203-9

176: U203-11 U204-3 .%U204-3

177: RN9-10 U205-12 .%U205-12

178: U193-6 U158-14 U207-13 .%U207-13

179: U158-15 U207-2 .%U207-2

180: U158-17 U207-4 .%U207-4

181: U209-4 U208-15 .%U208-15

182: U145-25 U16-15 U21-1 .%U21-1

183: U22-5 U21-15 U21-12 .%U21-12

184: U145-30 U21-13 .%U21-13

185: U21-10 U22-6 U21-5 .%U21-5

186: U22-4 U21-7 .%U21-7

187: U108-12 U210-2 .%U210-2

188: U210-10 U210-6 U151-4 RN2-9 U108-7
188: U108-10 U210-1 U108-1 U175-9 U151-15
188: U151-10 U151-3 U151-2 U151-11 U151-12
188: U151-14 U175-1 U175-2 U108-6 U108-5

188: U210-5 U210-4 U210-3 U210-9 U210-7
188: .%U210-7

189: U228-10 U214-13 .%U214-13

190: U219-16 U214-15 .%U214-15

191: U219-17 U214-16 .%U214-16

192: U219-1 U214-17 .%U214-17

193: U219-2 U214-18 .%U214-18

194: U228-8 U215-3 .%U215-3

195: U191-1 U215-5 .%U215-5

196: U236-18 U217-16 .%U217-16

197: U236-19 U217-17 .%U217-17

198: U236-16 U218-1 .%U218-1

199: U236-15 U218-17 .%U218-17

200: U236-17 U218-2 .%U218-2

201: U145-32 U22-14 .%U22-14

202: U145-31 U22-2 .%U22-2

203: U235-15 U221-2 .%U221-2

204: U245-15 U222-8 .%U222-8

205: U222-4 U222-12 U224-9 U223-1 .%U223-1

206: U245-1 U245-10 U244-10 U224-10 U223-10
206: .%U223-10

207: U222-9 U244-23 U223-14 .%U223-14

208: U204-1 U201-9 U223-23 .%U223-23

209: U222-13 U224-1 .%U224-1

210: U222-10 U244-15 U224-23 .%U224-23

211: C139-1 U227-1 .%U227-1

212: C126-1 U227-8 .%U227-8

213: U175-15 U228-12	.%U228-12
214: U203-13 U228-5	.%U228-5
215: U59-3 U60-3 U23-11	.%U23-11
216: U114-7 U23-4	.%U23-4
217: U208-9 U233-4	.%U233-4
218: U221-16 U234-17	.%U234-17
219: U221-17 U234-18	.%U234-18
220: U221-1 U234-19	.%U234-19
221: U162-11 U235-12	.%U235-12
222: U176-6 U235-13	.%U235-13
223: U220-16 U235-16	.%U235-16
224: U220-17 U235-17	.%U235-17
225: U220-1 U235-18	.%U235-18
226: U220-2 U235-19	.%U235-19
227: U147-30 U237-12	.%U237-12
228: U147-29 U237-13	.%U237-13
229: U147-28 U237-14	.%U237-14
230: U147-27 U237-15	.%U237-15
231: U147-26 U237-16	.%U237-16
232: U147-25 U237-17	.%U237-17
233: U147-24 U237-18	.%U237-18
234: U147-23 U237-19	.%U237-19
235: U147-22 U237-20	.%U237-20
236: U147-31 U238-12	.%U238-12
237: U147-32 U238-13	.%U238-13
238: U147-33 U238-14	.%U238-14

239: U147-34 U238-15 .%U238-15

240: U147-35 U238-16 .%U238-16

241: U147-36 U238-17 .%U238-17

242: U147-37 U238-18 .%U238-18

243: U147-38 U238-19 .%U238-19

244: U47-3 U24-12 .%U24-12

245: U47-2 U24-13 .%U24-13

246: U47-1 U24-14 .%U24-14

247: U17-3 U240-19 .%U240-19

248: U222-5 U244-1 .%U244-1

249: U222-11 U244-9 .%U244-9

250: U93-8 U223-16 U224-16 U244-16 U245-16
250: .%U245-16

251: U201-11 U223-8 U224-8 U244-8 U245-8
251: .%U245-8

252: U222-6 U245-9 .%U245-9

253: U30-17 U115-5 U25-12 .%U25-12

254: JB20-1 U25-8 .%U25-8

255: U28-8 U27-11 .%U27-11

256: U49-2 U27-5 .%U27-5

257: U49-5 U28-5 .%U28-5

258: U27-1 U28-6 .%U28-6

259: U1-1 U3-13 .%U3-13

260: U1-3 U3-14 .%U3-14

261: U1-18 U3-17 .%U3-17

262: U1-20 U3-18 .%U3-18

263: U4-12 U3-7 .%U3-7

264: U1-39 U3-8	.%U3-8
265: U115-4 U30-1	.%U30-1
266: U29-12 U30-13	.%U30-13
267: U29-15 U30-14	.%U30-14
268: U115-6 U30-16	.%U30-16
269: U29-19 U30-18	.%U30-18
270: U29-2 U30-7	.%U30-7
271: U29-6 U30-8	.%U30-8
272: U28-11 U31-1	.%U31-1
273: U33-1 U31-19	.%U31-19
274: U11-17 U31-5	.%U31-5
275: U11-13 U31-9	.%U31-9
276: U33-2 U32-2	.%U32-2
277: U33-4 U32-4	.%U32-4
278: U145-14 U33-11	.%U33-11
279: U31-16 U33-3	.%U33-3
280: U127-9 U33-5	.%U33-5
281: U38-6 U39-11	.%U39-11
282: U40-5 U59-5 U39-12	.%U39-12
283: U38-5 U39-13	.%U39-13
284: U40-4 U59-7 U39-14	.%U39-14
285: U38-4 U39-15	.%U39-15
286: U40-3 U59-9 U39-16	.%U39-16
287: U38-3 U39-17	.%U39-17
288: U40-2 U59-11 U39-18	.%U39-18
289: U38-13 U39-2	.%U39-2

290: U38-12 U39-4	.%U39-4
291: U38-11 U39-6	.%U39-6
292: U38-10 U39-8	.%U39-8
293: U1-7 U4-1	.%U4-1
294: U1-33 U4-6	.%U4-6
295: U39-9 U60-11 U40-10	.%U40-10
296: U39-7 U60-9 U40-11	.%U40-11
297: U39-5 U60-7 U40-12	.%U40-12
298: U39-3 U60-5 U40-14	.%U40-14
299: U42-2 U42-3	.%U42-3
300: U45-4 U62-12 U46-11	.%U46-11
301: U45-1 U62-10 U46-15	.%U46-15
302: U45-2 U62-9 U46-17	.%U46-17
303: U23-3 U46-19	.%U46-19
304: U65-2 U48-5	.%U48-5
305: U65-5 U48-6	.%U48-6
306: U65-6 U48-7	.%U48-7
307: U65-9 U48-8	.%U48-8
308: U50-9 U50-1 U49-4	.%U49-4
309: U7-9 U5-12	.%U5-12
310: U134-9 U50-11	.%U50-11
311: U50-6 U50-13	.%U50-13
312: U30-12 U51-12	.%U51-12
313: U59-13 U60-13 U58-12	.%U58-12
314: U59-1 U60-1 U58-4	.%U58-4
315: U59-15 U60-15 U58-7	.%U58-7

316: U59-14 U60-14 U58-9 .%U58-9

317: U1-22 U6-2 .%U6-2

318: U45-3 U46-13 U62-11 .%U62-11

319: X2-2 C35-2 U62-17 .%U62-17

320: U45-11 U80-12 U62-18 .%U62-18

321: U45-9 U80-16 U62-3 .%U62-3

322: U45-5 U80-2 U62-4 .%U62-4

323: U45-6 U80-5 U62-5 .%U62-5

324: U45-7 U80-6 U62-6 .%U62-6

325: U45-8 U80-15 U62-7 .%U62-7

326: U65-12 U64-5 .%U64-5

327: U65-15 U64-6 .%U64-6

328: U65-16 U64-7 .%U64-7

329: U65-19 U64-8 .%U64-8

330: U33-12 U66-10 .%U66-10

331: U40-15 U66-11 .%U66-11

332: U66-1 U66-8 .%U66-8

333: U66-3 U67-3 .%U67-3

334: U5-13 U7-10 .%U7-10

335: U5-14 U7-11 .%U7-11

336: U58-5 U77-2 .%U77-2

337: U58-2 U77-3 .%U77-3

338: U58-11 U77-6 .%U77-6

339: U58-14 U77-7 .%U77-7

340: U45-10 U80-9 .%U80-9

341: U82-1 U44-7 U81-4 .%U81-4

342: U83-2 U82-2 .%U82-2

343: U118-2 U83-11 .%U83-11

344: U174-14 U83-3 .%U83-3

345: U51-5 U84-10 .%U84-10

346: U88-5 U84-12 .%U84-12

347: U67-9 U84-13 .%U84-13

348: U67-5 U84-9 .%U84-9

349: U31-2 U85-8 .%U85-8

350: U46-14 U86-1 .%U86-1

351: U131-5 U86-7 .%U86-7

352: U90-4 U88-3 .%U88-3

353: U90-5 U89-8 .%U89-8

354: U12-6 U9-16 .%U9-16

355: U39-19 U90-1 .%U90-1

356: U134-1 U202-1 U91-6 .%U91-6

357: U62-16 C36-2 X2-1 .%X2-1

358: U207-14 U189-14 U227-14 C159-1 .+12V

359: J94-1 R4-2 R11-1 R10-1 U225-14 C125-1
359: D1-1 U122-27 U122-26 U122-1 .+5V

360: U207-1 U189-1 R29-2 J99-1 Q1-2 C137-1
360: .-12V

361: U225-8 Q1-3 C136-1 U8-12 .-5V

362: U210-12 U211-11 .1 MHZ

363: U151-9 .10 MHZ H
*** Only one pin in net

364: U151-7 .10 MHZ L
*** Only one pin in net

365: U225-12 U210-13 .2 MHZ

```
366: U151-5 U151-13                          .20 MHZ

367: U46-2 U46-4 U21-9 U210-14 U175-6
367:                                         .4 MHZ

368: U151-1 U90-6 U108-2                     .40 MHZ

369: U145-19 U86-3 U108-13                   .8 MHZ

370: U161-14 U126-27 U143-3 U143-5 U159-19
370: U157-34 U160-19 U147-6 U145-5 U106-1
370: U105-1 U104-1 U103-1 U102-1 U101-1
370: U99-1 U100-1 U122-10 U174-1 U81-1
370:                                         .A<0>

371: U144-40 U107-6 U106-16 U105-16 U104-16
371: U103-16 U102-16 U101-16 U99-16 U100-16
371: U122-21                                 .A<10>

372: U144-1 U107-9 U106-17 U105-17 U104-17
372: U103-17 U102-17 U101-17 U99-17 U100-17
372: U122-23                                 .A<11>

373: U144-2 U107-12 U106-18 U105-18 U104-18
373: U103-18 U102-18 U101-18 U99-18 U100-18
373: U122-2                                  .A<12>

374: U144-3 U107-15 U106-19 U105-19 U104-19
374: U103-19 U102-19 U101-19 U99-19 U100-19
374: U125-7                                  .A<13>

375: U144-4 U107-16 U125-8                   .A<14>

376: U144-5 U107-19 U125-9                   .A<15>

377: U161-12 U172-10 U159-20 U157-33 U160-20
377: U147-7 U106-2 U105-2 U104-2 U103-2
377: U102-2 U101-2 U99-2 U100-2 U122-9
377: U174-2 U81-2                            .A<1>

378: U32-12 U147-8 U106-3 U105-3 U104-3
378: U103-3 U102-3 U101-3 U99-3 U100-3
378: U122-8 U174-3 U81-3 U133-2              .A<2>

379: U32-14 U106-4 U105-4 U104-4 U103-4
379: U102-4 U101-4 U99-4 U100-4 U122-7
379: U81-5 U83-1 U133-3                      .A<3>

380: U144-34 U127-37 U106-5 U105-5 U104-5
380: U103-5 U102-5 U101-5 U99-5 U100-5
380: U122-6 U44-1                            .A<4>
```

```
381: U144-35 U127-38 U106-6 U105-6 U104-6
381: U103-6 U102-6 U101-6 U99-6 U100-6
381: U122-5 U44-2                          .A<5>

382: U144-36 U127-39 U106-7 U105-7 U104-7
382: U103-7 U102-7 U101-7 U99-7 U100-7
382: U122-4 U44-3                          .A<6>

383: U144-37 U127-40 U106-13 U105-13 U104-13
383: U103-13 U102-13 U101-13 U99-13 U100-13
383: U122-3 U44-5                          .A<7>

384: U144-38 U107-2 U106-14 U105-14 U104-14
384: U103-14 U102-14 U101-14 U99-14 U100-14
384: U122-25                               .A<8>

385: U144-39 U107-5 U106-15 U105-15 U104-15
385: U103-15 U102-15 U101-15 U99-15 U100-15
385: U122-24                               .A<9>

386: U173-12                               .AD15
*** Only one pin in net
*** Run Has no outputs

387: U1-34 U2-6                            .ADDR DATA<0>

388: U1-36 U2-7                            .ADDR DATA<1>

389: U1-38 U2-8                            .ADDR DATA<2>

390: U1-40 U2-9                            .ADDR DATA<3>

391: U1-2 U2-11                            .ADDR DATA<4>

392: U1-4 U2-12                            .ADDR DATA<5>

393: U1-17 U2-13                           .ADDR DATA<6>

394: U1-19 U2-14                           .ADDR DATA<7>

395: U1-21 U24-6                           .ADDR DATA<8>

396: U163-6 U218-3 U217-3 U220-3 U221-3
396: U240-17 U219-3                        .ADDR<0>

397: U149-6 U164-4 U148-2 U218-6 U217-6
397: U220-6 U221-6 U219-6 U240-11          .ADDR<1>

398: U149-4 U164-7 U148-3 U218-4 U217-4
398: U220-4 U221-4 U219-4 U240-13          .ADDR<2>

399: U149-5 U164-9 U148-4 U218-5 U217-5
```

399: U220-5 U221-5 U219-5 U240-15 .ADDR<3>

400: U12-16 JB2-1 RN3-3 .B<0>

401: U12-18 JB4-1 RN3-4 .B<1>

402: U12-3 JB6-1 RN3-5 .B<2>

403: U12-5 JB8-1 RN3-6 .B<3>

404: U12-9 JB24-1 RN3-8 .BA<0>

405: U12-7 JB28-1 RN3-7 .BA<1>

406: U211-17 .BC INSTR ENB
*** Only one pin in net

407: U211-16 .BC INSTR<0>
*** Only one pin in net

408: U211-15 .BC INSTR<1>
*** Only one pin in net

409: U211-14 .BC INSTR<2>
*** Only one pin in net

410: U26-6 U34-3 U29-3 U51-2 U31-3 .BR<0>

411: U26-7 U34-4 U29-4 U31-4 .BR<1>

412: U26-8 U34-7 U29-7 U31-7 .BR<2>

413: U26-9 U34-8 U29-8 U50-2 U31-8 .BR<3>

414: U26-11 U34-13 U29-13 U31-13 .BR<4>

415: U26-12 U34-14 U29-14 U31-14 .BR<5>

416: U26-13 U34-17 U29-17 U31-17 .BR<6>

417: U26-14 U34-18 U29-18 U31-18 .BR<7>

418: U167-5 U185-5 U170-5 U168-2 .BUF D<0>

419: U167-6 U185-6 U170-6 U168-5 .BUF D<1>

420: U167-7 U185-7 U170-7 U168-6 .BUF D<2>

421: U167-8 U185-8 U170-8 U168-9 .BUF D<3>

422: U152-5 U186-5 U171-5 U168-12 .BUF D<4>

```
 423: U152-6 U186-6 U171-6 U168-15          .BUF D<5>

 424: U152-7 U186-7 U171-7 U168-16          .BUF D<6>

 425: U152-8 U186-8 U171-8 U168-19          .BUF D<7>

 426: U144-23 U82-9 U172-9 U125-11          .BUS ACK L

 427: U162-13 U146-9                        .BUS CTRL

 428: U12-14 JB26-1 RN3-2                   .BUS ENB

 429: RN8-5 U144-25 U82-6                   .BUS RQST L

 430: U57-17                                .BUSY
*** Only one pin in net
*** Run Has no outputs

 431: U176-10 U191-6 U17-1                  .C/P ENB H

 432: U91-4 U91-5                           .CAR SENSE L
*** Run Has no outputs

 433: U133-11 U142-9 U139-9 U142-16 U139-16
 433:                                       .CLK IN H

 434: U133-12 U140-16 U140-9 U141-9 U141-16
 434:                                       .CLK IN L

 435: U133-9 U186-19 U185-1                 .CLK OUT H

 436: U133-10 U171-19 U170-1                .CLK OUT L

 437: U176-9 U65-11 U140-1 U141-19 U139-1
 437: U142-19 U204-13 U204-11 U228-4 U132-9
 437:                                       .CLK-4F

 438: U161-2 U228-3 J176-1                  .CLK-7R

 439: U243-11 U242-11 U204-10 U209-5 U193-10
 439: U23-13                                .CLKOR

 440: U199-9 U195-9 U200-5 U110-11 U149-14
 440: U149-13 U148-1 U218-13 U217-13 U218-14
 440: U217-14 U220-14 U221-14 U219-14 U219-13
 440: U220-13 U221-13 U204-12               .CLKORB

 441: U34-6 U18-4                           .CLR CRC H

 442: U236-12 U228-11 U162-9 U176-4         .CO<1>

 443: U162-10 U176-5 U214-12                .CO<2>
```

```
444: U132-6 J39-1                          .COM NET INT L

445: U14-9 U19-6                           .CRC BITS

446: U51-9 U17-9                           .CRC CLK ENB H

447: U7-1 U18-13                           .CRC ERR H

448: U19-7 U18-11                          .CRC IN

449: U19-13 U18-12                         .CRC OUT

450: U197-4 U199-10 U200-6                 .D GRANT H

451: U127-3 RN1-9 U125-6                   .D MEM RD L

452: RN1-10 U127-4 U125-5                  .D MEM WR L

453: JP2-2 RN6-8 U7-15 U11-2 U66-9         .D SEL<0>

454: U7-14 RN6-7 JP3-2 U85-4               .D SEL<1>

455: U48-14 U139-14 U140-14 RN10-2 U144-14
455: U126-11 U107-3 U127-30 U159-8 U158-40
455: U160-8 U157-40 U147-10 U145-6 U80-3
455: U46-3 U168-3 U106-12 U106-8 U122-11
455: U174-13                               .D<0>

456: U48-13 U139-13 U140-13 RN10-3 U144-15
456: U126-10 U107-4 U127-29 U159-7 U158-1
456: U160-7 U157-1 U147-11 U145-7 U80-4
456: U46-5 U168-4 U105-12 U105-8 U122-12
456:                                       .D<1>

457: U48-12 U139-12 U140-12 RN10-4 U144-12
457: U126-9 U107-7 U127-28 U159-6 U158-39
457: U160-6 U157-39 U147-12 U145-8 U80-7
457: U46-7 U168-7 U104-12 U104-8 U122-13
457:                                       .D<2>

458: U48-11 U139-11 U140-11 RN10-5 U144-8
458: U126-8 U107-8 U127-27 U159-5 U158-2
458: U160-5 U157-2 U147-13 U145-9 U80-14
458: U46-9 U168-8 U103-12 U103-8 U122-15
458:                                       .D<3>

459: U64-14 U142-14 U141-14 RN10-6 U144-7
459: U126-7 U107-13 U127-26 U159-4 U158-38
459: U160-4 U157-38 U147-14 U145-10 U80-17
459: U168-13 U102-12 U102-8 U122-16        .D<4>
```

```
460: U64-13 U142-13 U141-13 RN10-7 U144-9
460: U126-6 U107-14 U127-23 U159-3 U158-3
460: U160-3 U157-3 U147-15 U145-11 U80-8
460: U168-14 U101-12 U101-8 U122-17      .D<5>

461: U64-12 U85-7 U142-12 U141-12 RN10-8
461: U144-10 U126-5 U107-17 U127-22 U159-2
461: U158-37 U160-2 U157-37 U147-16 U145-12
461: U80-13 U168-17 U100-12 U100-8 U122-18
461:                                     .D<6>

462: U64-11 U85-9 U142-11 U141-11 RN10-9
462: U144-13 U126-4 U107-18 U127-21 U159-1
462: U158-4 U160-1 U157-4 U147-17 U145-13
462: U168-18 U99-12 U99-8 U122-19        .D<7>

463: U161-6 U144-30 U127-32              .DA<0>

464: U161-8 U144-31 U127-33              .DA<1>

465: U32-8 U144-32 U127-34               .DA<2>

466: U32-6 U144-33 U127-35               .DA<3>

467: U14-12 U223-7 U245-7 U244-7 U224-7
467:                                     .DATA INTO FIFO
*** Run Has no outputs

468: U15-14 RN6-2 JA34-1                 .DIR L

469: U1-14 U7-6                          .DISK CC L

470: U9-12 U84-11                        .DISK INT ENB

471: J179-1 U84-8                        .DISK INT L

472: U195-6 U68-17                       .DISK RQST H

473: U213-14 U68-15                      .DISK WR H

474: U68-4 U31-15                        .DISK WR OP H

475: U128-12 U131-3 U127-15              .DMA ACK L

476: U83-13 U133-15 U162-12 U123-2       .DMA FIFO L

477: U146-6 U186-2                       .DMA IR

478: U146-5 U142-17                      .DMA OR

479: U146-7 U127-16                      .DMA RQST L
```

480: U158-36 U125-16 .DP IO RQST L

481: JB18-1 U12-12 RN6-9 .DRIVE SEL<0>

482: U112-14 JB16-1 RN6-10 .DRIVE SEL<1>

483: U30-2 U17-4 U19-14 .DS<0>

484: U30-5 U17-5 U19-2 .DS<1>

485: U66-6 U47-4 .EMIT NOW

486: U47-14 U34-11 .EMIT<1>

487: U47-13 U29-11 U50-3 U27-3 .EMIT<2>

488: U47-12 U31-11 U51-3 .EMIT<3>

489: U47-9 U68-1 U68-19 .EMIT<6>

490: U132-1 U111-9 .ENB BIT CNT H

491: U114-9 .ENB IN FIFO<0> L
*** Only one pin in net

492: U114-10 .ENB IN FIFO<1> L
*** Only one pin in net

493: U110-19 U216-14 U115-8 U166-1 U191-4
493: U191-2 .ENB MA H

494: U114-11 .ENB NET FIFO L
*** Only one pin in net

495: U194-5 U132-3 .ENB NET INT H

496: U203-6 U110-15 .ENB PL

497: U110-16 U181-6 .ENB TOP

498: U111-6 U211-1 .ENB USEC CLK H

499: U111-5 U132-4 .ENB USEC INT H

500: U128-13 U146-14 U126-18 U125-13 .END DMA INT

501: U128-11 U162-2 U126-23 U127-36 RN1-2
501: U128-5 .EOP L

502: J103-1 U195-13 .EXT A RQST H

503: U213-1 J154-1 .EXT A WR H

504: U193-13 U129-14 .EXT ADDR L

505: J173-1 U195-4 R1-2 .EXT B RQST H

506: U213-2 J174-1 .EXT B WR H

507: U4-5 U9-2 .F<0>

508: U4-11 U9-5 .F<1>

509: U4-14 U9-6 .F<2>

510: U58-3 U34-9 .FA<0>

511: U58-6 U34-12 .FA<1>

512: U58-10 U34-15 .FA<2>

513: U58-13 U34-16 .FA<3>

514: JB34-1 U11-6 RN4-4 .FAULT

515: U29-5 U223-11 U224-11 U244-11 U245-11
515: .FIFO CLR L

516: U30-9 U201-13 .FIFO IN CLK ENB H

517: U30-6 U93-10 .FIFO OUT CLK ENB H

518: U127-25 U128-6 U145-15 .FLOP ACK L

519: U15-11 RN5-6 JA20-1 .FLOP INDEX L

520: U126-21 U145-18 .FLOP INT

521: JA46-1 U46-6 RN5-8 .FLOP RD DATA L

522: U15-13 RN5-7 JA22-1 .FLOP RDY L

523: U127-19 U33-10 .FLOP RQST L

524: U16-13 U131-12 U15-1 .FLOP RW

525: U145-23 U131-6 .FLOP SEP DATA

526: U16-7 U16-1 .FLOP SK

527: U15-4 RN5-4 JA42-1 .FLOP TK<0> L

528: U15-2 RN5-3 JA10-1 .FLOP TWO SIDED L

```
 529: U145-22 U86-2                          .FLOP WINDOW

 530: U16-3 JA38-1                           .FLOP WR DATA L

 531: U16-5 JA40-1                           .FLOP WR ENB L

 532: U16-2 RN5-2 JA44-1                     .FLOP WR PRO L

 533: U172-4 U172-3 U170-18 U171-18 U186-18
 533: U185-18 U140-18 U141-18 U142-18 U139-18
 533:                                        .FLUSH L

 534: U173-11                                .FP CLK L
*** Only one pin in net
*** Run Has no outputs

 535: U57-15                                 .FP INT
*** Only one pin in net
*** Run Has no outputs

 536: U33-9 U57-11                           .FR
*** Run Has no outputs

 537: U33-8                                  .FR L
*** Only one pin in net

 538: U57-13                                 .FS
*** Only one pin in net
*** Run Has no outputs

 539: U201-5 U211-19                         .GATED 1MHZ

 540: U132-13                                .GATED PACKET CLK L
*** Only one pin in net
*** Run Has no outputs

 541: U66-5 U93-6 U49-13                     .GATED PLO CLK H

 542: U88-9                                  .GO H
*** Only one pin in net

 543: U127-24 U147-2                         .GPIB ACK L

 544: J42-1 U237-9                           .GPIB ATN

 545: J144-1 U237-7                          .GPIB DAV

 546: J48-1 U238-2                           .GPIB DI<1>

 547: J147-1 U238-3                          .GPIB DI<2>

 548: J47-1 U238-4                           .GPIB DI<3>
```

549: J146-1 U238-5 .GPIB DI<4>

550: J38-1 U238-6 .GPIB DI<5>

551: J138-1 U238-7 .GPIB DI<6>

552: J139-1 U238-8 .GPIB DI<7>

553: J41-1 U238-9 .GPIB DI<8>

554: J46-1 U237-8 .GPIB EOI

555: J43-1 U237-4 .GPIB IFC

556: U131-9 RN1-4 U147-9 .GPIB INT L

557: J143-1 U237-5 .GPIB NDAC

558: J44-1 U237-6 .GPIB NRFD

559: U238-11 U174-9 .GPIB PE

560: U147-5 U125-15 .GPIB RD

561: J141-1 U237-3 .GPIB REN

562: U127-18 U147-1 .GPIB RQST L

563: U237-1 U174-7 .GPIB SC

564: J142-1 U237-10 .GPIB SRQ

565: U199-11 J171-1 U109-18 .GRANT DMA

566: U150-12 U216-13 .HDCAR

567: U15-5 JA18-1 .HEAD LD L

568: J148-1 U216-1 .HOLD OFF L

569: U128-9 U166-10 U166-5 U166-12 U114-1
569: U23-5 U17-2 U161-18 .ICLK-4R

570: U34-2 U30-3 .IDS<0>

571: U34-5 U30-4 .IDS<1>

572: JB10-1 RN4-3 U6-11 .INDEX

573: U129-1 U111-1 J72-1 U194-1 U28-2
573: U13-1 U9-1 .INIT L

```
574: U126-13 U157-7                          .INT ENB

575: U140-5 U242-2 U223-3                    .IO MDO BUF<0>

576: U139-7 U243-6 U244-5                    .IO MDO BUF<10>

577: U139-8 U243-9 U244-6                    .IO MDO BUF<11>

578: U142-5 U243-12 U245-3                   .IO MDO BUF<12>

579: U142-6 U243-15 U245-4                   .IO MDO BUF<13>

580: U142-7 U243-16 U245-5                   .IO MDO BUF<14>

581: U142-8 U243-19 U245-6                   .IO MDO BUF<15>

582: U140-6 U242-5 U223-4                    .IO MDO BUF<1>

583: U140-7 U242-6 U223-5                    .IO MDO BUF<2>

584: U140-8 U242-9 U223-6                    .IO MDO BUF<3>

585: U141-5 U242-12 U224-3                   .IO MDO BUF<4>

586: U141-6 U242-15 U224-4                   .IO MDO BUF<5>

587: U141-7 U242-16 U224-5                   .IO MDO BUF<6>

588: U141-8 U242-19 U224-6                   .IO MDO BUF<7>

589: U139-5 U243-2 U244-3                    .IO MDO BUF<8>

590: U139-6 U243-5 U244-4                    .IO MDO BUF<9>

591: R1-1 U197-11 J178-1 U213-15 R2-1
591: U213-4 U213-7 U195-1 U197-8 U197-10
591: U109-17                                 .IO MEM RQST

592: U213-5 J153-1 U109-16                   .IO MEM WR

593: U179-15 U115-10                         .IO SEL H

594: U150-14 U164-1 U148-8 U236-14 U166-3
594: U234-14 U235-14 U214-14                 .IO SEL L

595: U216-10 U209-1 U233-1 J69-1 U230-2
595: U196-12 U211-7                          .IOA<0>

596: U163-12 U216-11 U209-2 U233-2 J169-1
596: U230-3 U196-13 U211-8                   .IOA<1>
```

```
597: U209-3 U233-3 J68-1 U230-4          .IOA<2>

598: U208-1 J168-1 U230-5                .IOA<3>

599: U208-2 J67-1 U230-6                 .IOA<4>

600: U208-4 J167-1 U230-7                .IOA<5>

601: U208-6 J66-1 U230-8                 .IOA<6>

602: U232-1 U231-1 U208-3 J166-1 U230-9
602: U211-9                              .IOA<7>

603: U232-19 U231-19 U230-19             .IOB BUF ENB L

604: U208-5 J71-1 U230-1                 .IOB ENB L

605: U57-9 U165-4 U235-9 U167-14 U65-3
605: U231-2 U129-4 U194-2 U111-3 U196-4
605: U77-15 U60-4 U13-3 U9-3 U11-3       .IOB<0>

606: U214-8 U232-4 U85-16                .IOB<10>

607: U214-9 U232-5                       .IOB<11>

608: U235-5 U232-6                       .IOB<12>

609: U235-6 U232-7                       .IOB<13>

610: U235-7 U232-8                       .IOB<14>

611: U57-3 U235-8 U161-3 U232-9          .IOB<15>

612: U57-5 U165-5 U234-5 U167-13 U65-4
612: U231-3 U129-5 U111-4 U196-5 U77-1
612: U60-6 U13-4 U9-4 U11-5              .IOB<1>

613: U165-12 U236-5 U234-6 U167-12 U65-7
613: U231-4 U129-12 U111-7 U196-6 U77-10
613: U60-10 U13-7 U9-7 U11-7             .IOB<2>

614: U165-13 U236-6 U234-7 U167-11 U65-8
614: U231-5 U129-13 U111-8 U196-7 U77-9
614: U60-12 U13-8 U9-8 U85-12            .IOB<3>

615: U150-5 U148-6 U236-7 U152-14 U65-13
615: U231-6 U111-13 U196-16 U59-4 U13-13
615: U9-13 U11-12                        .IOB<4>

616: U150-6 U25-3 U236-8 U152-13 U65-14
616: U231-7 U111-14 U196-17 U59-6 U13-14
616: U9-14 U11-14                        .IOB<5>
```

```
617: U150-7 U25-5 U236-9 U152-12 U65-17
617: U231-8 U111-17 U196-18 U59-10 U13-17
617: U9-17 U11-9                          .IOB<6>

618: U57-7 U150-8 U25-4 U214-5 U161-5
618: U152-11 U65-18 U231-9 U111-18 U196-19
618: U59-12 U13-18 U9-18 U85-14           .IOB<7>

619: U214-6 U232-2 U88-12 U11-16          .IOB<8>

620: U214-7 U232-3 U11-18                 .IOB<9>

621: U152-2 U85-11                        .IOD OUT FIFO

622: U161-17 U162-5 U174-4                .IOD OUT RDY

623: U231-18 J64-1                        .IOD<0>

624: U232-16 J58-1                        .IOD<10>

625: U232-15 J158-1                       .IOD<11>

626: U232-14 J57-1                        .IOD<12>

627: U232-13 J157-1                       .IOD<13>

628: U232-12 J56-1                        .IOD<14>

629: U232-11 J156-1                       .IOD<15>

630: U231-17 J164-1                       .IOD<1>

631: U231-16 J63-1                        .IOD<2>

632: U231-15 J163-1                       .IOD<3>

633: U231-14 J62-1                        .IOD<4>

634: U231-13 J162-1                       .IOD<5>

635: U231-12 J61-1                        .IOD<6>

636: U231-11 J161-1                       .IOD<7>

637: U232-18 J59-1                        .IOD<8>

638: U232-17 J159-1                       .IOD<9>

639: U32-11                               .J ADDR<0>
*** Only one pin in net
*** Run Has no outputs
```

```
 640: U32-13                                .J ADDR<1>
*** Only one pin in net
*** Run Has no outputs

 641: U32-15                                .J ADDR<2>
*** Only one pin in net
*** Run Has no outputs

 642: U32-17 U57-2                          .J ADDR<3>
*** Run Has no outputs

 643: U1-12 U24-11                          .JMP<0>

 644: U1-11 U24-9                           .JMP<1>

 645: U1-9 U24-8                            .JMP<2>

 646: U1-8 U24-7                            .JMP<3>

 647: J197-1 RN1-6 U157-29                  .KBD DATA H

 648: U118-8 U168-11                        .LATCH BUF D

 649: U230-17 U176-13 U211-4                .LD BIT CNT L

 650: U230-22 U9-11 U28-12                  .LD D CTRL 1

 651: U230-23 U13-11 U25-11 U25-10 U25-9
 651:                                       .LD D CTRL 2

 652: U230-20 U77-11                        .LD DF CNTR L

 653: U230-21 U77-14 U58-1 U23-12           .LD DF DATA L

 654: U216-12 U115-9 U166-2 U230-16         .LD DMA ADDR L

 655: U165-9 U209-15                        .LD DMA CHAN L

 656: U209-14                               .LD FP INST L
*** Only one pin in net

 657: U129-9 U209-10                        .LD INT ENB L

 658: U209-13 U111-11 U88-11                .LD NET CTRL L

 659: U209-12 U194-3                        .LD NET ENB L

 660: U208-14                               .LD NET FILE L
*** Only one pin in net

 661: U64-19 U48-1 U209-11                  .LD UPROC DATA L
```

662: U230-18 U193-9 U211-6 .LD USEC CLK L

663: U5-8 U66-12 .LDSR

664: U16-12 RN6-4 JA2-1 .LOW CUR L

665: U130-8 U124-2 U158-8 U157-8 U44-6
665: .M1 L

666: U191-3 J54-1 .MA EXT A

667: U176-8 U239-19 U239-1 U241-19 U241-1
667: U240-1 .MA OUT L

668: J31-1 U240-16 U240-5 .MADDR<10>

669: J131-1 U240-18 U240-3 .MADDR<11>

670: J29-1 U241-12 .MADDR<12>

671: J129-1 U241-14 .MADDR<13>

672: J28-1 U241-16 .MADDR<14>

673: J128-1 U241-18 .MADDR<15>

674: J27-1 U241-3 .MADDR<16>

675: J127-1 U241-5 .MADDR<17>

676: J26-1 U241-7 .MADDR<18>

677: J126-1 U241-9 .MADDR<19>

678: U239-5 J36-1 .MADDR<2>

679: U239-3 J136-1 .MADDR<3>

680: U239-18 J34-1 .MADDR<4>

681: U239-16 J134-1 .MADDR<5>

682: U239-14 J33-1 .MADDR<6>

683: U239-12 J133-1 .MADDR<7>

684: J32-1 U240-12 U240-9 .MADDR<8>

685: J132-1 U240-14 U240-7 .MADDR<9>

686: U7-3 U27-12 U90-2 .MATCH H

687: U170-14 J14-1 U223-21 .MDI<0>

688: U185-12 J8-1 U244-19 .MDI<10>

689: U185-11 J108-1 U244-18 .MDI<11>

690: U186-14 J7-1 U245-21 .MDI<12>

691: U186-13 J107-1 U245-20 .MDI<13>

692: U186-12 J6-1 U245-19 .MDI<14>

693: U186-11 J106-1 U245-18 .MDI<15>

694: U170-13 J114-1 U223-20 .MDI<1>

695: U170-12 J13-1 U223-19 .MDI<2>

696: U170-11 J113-1 U223-18 .MDI<3>

697: U171-14 J12-1 U224-21 .MDI<4>

698: U171-13 J112-1 U224-20 .MDI<5>

699: U171-12 J11-1 U224-19 .MDI<6>

700: U171-11 J111-1 U224-18 .MDI<7>

701: U185-14 J9-1 U244-21 .MDI<8>

702: U185-13 J109-1 U244-20 .MDI<9>

703: U242-3 J24-1 .MDO<0>

704: U243-7 J18-1 .MDO<10>

705: U243-8 J118-1 .MDO<11>

706: U243-13 J17-1 .MDO<12>

707: U243-14 J117-1 .MDO<13>

708: U243-17 J16-1 .MDO<14>

709: U243-18 J116-1 .MDO<15>

710: U242-4 J124-1 .MDO<1>

711: U242-7 J23-1 .MDO<2>

712: U242-8 J123-1 .MDO<3>

```
 713: U242-13 J22-1                          .MDO<4>

 714: U242-14 J122-1                         .MDO<5>

 715: U242-17 J21-1                          .MDO<6>

 716: U242-18 J121-1                         .MDO<7>

 717: U243-3 J19-1                           .MDO<8>

 718: U243-4 J119-1                          .MDO<9>

 719: U145-26 U131-1 U175-10                 .MFM

 720: U132-2                                 .NET INT H
*** Only one pin in net
*** Run Has no outputs

 721: U88-13                                 .NET INT L
*** Only one pin in net
*** Run Has no outputs

 722: R2-2 U191-12 U199-14                   .NET RQST H

 723: U199-13                                .NET WR H
*** Only one pin in net
*** Run Has no outputs

 724: U123-14 U133-14                        .ODD

 725: JB22-1 U11-11 RN4-6 U66-2              .ON CYLINDER

 726: RN8-6 U144-20 U157-36 U125-4 U44-4
 726:                                        .P IO RQST L

 727: RN8-7 U144-19 U124-4 U125-3            .P MEM RQST L

 728: U28-1 U9-9                             .P RESET L

 729: U130-5 RN8-9 U130-4 U144-22 U127-2
 729:                                        .P WR L

 730: U218-16 U214-19                        .PALR7

 731: U128-3 U64-17 U126-19                  .PERQ INT

 732: U148-9 U150-15                         .PHDCAR

 733: U128-10 U223-2 U224-2 U244-2 U245-2
 733:                                        .PL DISK
```

```
734: U204-6 J104-1                          .PL EXT A

735: U228-6 J74-1                           .PL EXT B

736: U204-4                                 .PL NET
*** Only one pin in net

737: U204-8 U142-1 U139-19 U141-1 U140-19
737:                                        .PL UPROC

738: U8-9 JB45-1 U8-1                       .PLO CLK +

739: JB46-1 U8-2                            .PLO CLK -

740: U14-11 U51-11 U8-11 U8-3 U14-3 U93-4
740: U49-1 U90-11 U134-11 U93-9 U201-12
740:                                        .PLO CLK H

741: U40-6 U28-10 U38-8 U17-10 U90-10
741:                                        .PLO CLK L

742: U27-9 U49-3                            .PREMATCH H

743: U66-4 U66-13 U49-9                     .PROC CLK H

744: U6-3 U3-11 U1-31 U30-11 U49-7          .PROC CLK L

745: U122-20 U125-17                        .PROM CS L

746: U173-10 U173-13 U167-19 U152-19 U124-12
746: U124-10 U48-19 U64-1 RN2-2 U124-1
746: U158-6 U159-14 U159-11 U159-16 U81-6
746: U233-6 U209-6 U134-13 U134-10          .PU1

747: U118-4 U194-10 U194-12 RN2-4 U123-3
747: U123-7 U123-10 U118-10 U118-13 U118-1
747: U170-19 U171-1 U186-1 U185-19 U143-6
747: U207-12 U207-5 U207-10                 .PU3

748: U213-3 U199-1 RN2-5 U178-1 U180-1
748: U165-1 U150-9 U150-4 U215-1            .PU4

749: U6-4 RN2-6 U1-32 U1-15 U47-6 U7-2
749: U27-13 U27-10 U14-13 U14-10 U28-9
749: U38-9 U40-9 U51-10 U51-13 U14-1 U14-4
749: U18-2 U50-12 U27-4 U50-10 U49-10
749: U49-12 U49-11 U202-13 U67-12 U88-2
749: U67-2 U6-13 U6-10 U51-4 U67-10 U67-4
749: U88-4                                  .PU5

750: U134-2 RN2-7 U134-4 U202-4 U202-2
750: U196-15                                .PU6
```

```
 751: U194-4 U88-10                          .PU7
*** Run Has no outputs

 752: U214-3 U240-4 U219-10                  .R<10>

 753: U214-4 U240-2 U219-11                  .R<11>

 754: U235-11 U220-7 U241-8                  .R<12>

 755: U235-1 U220-8 U241-6                   .R<13>

 756: U235-2 U220-10 U241-4                  .R<14>

 757: U235-3 U220-11 U241-2                  .R<15>

 758: U235-4 U221-7 U241-17                  .R<16>

 759: U234-11 U221-8 U241-15                 .R<17>

 760: U234-1 U221-10 U241-13                 .R<18>

 761: U234-2 U221-11 U241-11                 .R<19>

 762: U217-10 U236-11 U239-15                .R<2>

 763: U239-17 U236-1 U217-11                 .R<3>

 764: U239-2 U218-7 U236-2                   .R<4>

 765: U239-4 U218-8 U236-3                   .R<5>

 766: U239-6 U218-10 U236-4                  .R<6>

 767: U239-8 U218-11 U214-11                 .R<7>

 768: U214-1 U240-8 U219-7                   .R<8>

 769: U214-2 U240-6 U219-8                   .R<9>

 770: U197-5 U199-2 U200-1 U178-4 U179-2
 770:                                        .RA<1>

 771: U197-6 U199-5 U200-2 U178-5 U179-5
 771:                                        .RA<2>

 772: U197-7 U199-7 U200-3 U178-12 U179-11
 772:                                        .RA<3>

 773: U106-11 U105-11 U104-11 U103-11 U102-11
 773: U101-11 U99-11 U100-11 U125-18         .RAM CS L
```

```
 774: U106-9 U105-9 U104-9 U103-9 U102-9
 774: U101-9 U99-9 U100-9 U125-19          .RAM WE L

 775: U111-16                              .RCV ALL
*** Only one pin in net

 776: U134-6                               .RCV CLK H
*** Only one pin in net

 777: U134-5                               .RCV CLK L
*** Only one pin in net

 778: U230-14 U211-3                       .RD BIT CNT L

 779: R32-2 JB48-1 U8-6                    .RD DATA +

 780: R32-1 U8-7 JB49-1                    .RD DATA -

 781: U38-1 U38-2 U8-5                     .RD DATA H

 782: U233-12 U11-19 U11-1 U85-1 U88-1
 782: U51-1 U67-1 U67-13                   .RD DISK STAT L

 783: U233-14                              .RD FP RESULT L
*** Only one pin in net

 784: U57-19 U233-15                       .RD FP STAT L

 785: JB36-1 U32-16 RN6-6                  .RD GATE

 786: U146-11 RN8-8 U144-21 U126-3 U127-1
 786: U159-22 U158-32 U160-22 U157-32 U145-2
 786: U23-2 U125-2                         .RD L

 787: U233-13                              .RD NET STAT L
*** Only one pin in net

 788: U167-16 U152-16 U167-9 U152-9 U126-20
 788: U233-11                              .RD UPROC DATA L

 789: U161-19 U233-10                      .RD UPROC STAT L

 790: U230-15 U196-9 U211-5                .RD USEC CLK L

 791: U28-3 U6-1 U3-1 U68-18 U29-1 U28-13
 791: U49-15 U50-4 U28-4 U49-14            .RESET D L

 792: U176-12 U211-2                       .RESET FIFO & CRC L
*** Run Has no outputs

 793: U127-13 U145-1 U129-11               .RESET H
```

```
 794: U172-2 U167-18 U152-18 U48-18 U64-18
 794: U144-26 U158-21 U157-21 U147-19 U80-1
 794: U129-10 U174-15                        .RESET L

 795: U112-16                                .RESET NET H
*** Only one pin in net

 796: U111-15 U112-4                         .RESET NET L

 797: U190-4 J87-1                           .RS232 CD A

 798: U205-4 J193-1                          .RS232 CD B

 799: U190-1 J86-1                           .RS232 CTS A

 800: U205-1 J192-1                          .RS232 CTS B

 801: U207-8 J82-1                           .RS232 DTR A

 802: J188-1 U189-8                          .RS232 DTR B

 803: U190-13 J182-1                         .RS232 RC IN A

 804: U205-13 J196-1                         .RS232 RC IN B

 805: U190-10 J84-1                          .RS232 RD A

 806: U205-10 J191-1                         .RS232 RD B

 807: U143-13 U143-12 U158-10                .RS232 RQST L

 808: U207-6 J184-1                          .RS232 RTS A

 809: J189-1 U189-6                          .RS232 RTS B

 810: J83-1 U188-10                          .RS232 TC IN A

 811: J186-1 U188-13                         .RS232 TC IN B

 812: U207-11 J181-1                         .RS232 TC OUT A

 813: J187-1 U189-11                         .RS232 TC OUT B

 814: U207-3 J183-1                          .RS232 TD A

 815: J88-1 U189-3                           .RS232 TD B

 816: U202-3                                 .RVC DATA OUT
*** Only one pin in net
*** Run Has no outputs

 817: U109-5 U110-12 U179-1                  .RW
```

818: U179-4 U164-3 U163-11 .RWA<1>

819: U179-7 U164-6 U163-10 .RWA<2>

820: U179-9 U164-10 U163-9 .RWA<3>

821: U114-5 U180-9 .S CLK 1

822: U178-9 U23-6 U228-9 .S CLK 3

823: U114-2 U109-3 U110-6 .S TIME<0>

824: U109-4 U114-3 U110-9 .S TIME<1>

825: JB14-1 RN4-2 U134-12 .SECTOR CLK

826: U33-13 JB32-1 U11-8 RN4-5 .SEEK ERR

827: U80-11 U81-9 .SEL CLK CTRL L

828: U23-1 U23-10 U81-7 .SEL CLK DATA L

829: U159-21 U133-4 .SEL CTC A L

830: U160-21 U133-5 .SEL CTC B L

831: U172-1 U81-11 .SEL DMA FLUSH L

832: U127-11 U44-12 .SEL DMA L

833: U83-5 U81-12 .SEL DMA START L

834: U145-4 U44-13 .SEL FLOPPY L

835: U147-3 U44-15 .SEL GPIB L

836: U126-1 U44-9 .SEL INT L

837: U124-13 U48-9 U64-9 U48-16 U64-16
837: U81-15 .SEL IOD RD L

838: U85-19 U81-13 .SEL IOD STAT L

839: U83-12 U167-1 U152-1 U81-14 .SEL IOD WR L

840: U172-13 U44-14 .SEL SIO A L

841: U157-35 U44-11 .SEL SIO B L

842: U196-8 U173-4 U211-12 .SEL USEC CLK L

843: U15-3 JA14-1 .SIDE SEL L

844: U127-14 U172-12 U143-14 .SIO ACK L

845: U158-7 U157-6 .SIO INT ENB

846: U127-17 U143-9 .SIO RQST L

847: U4-7 U3-3 U25-1 U25-2 .SMA<0>

848: U4-9 U3-4 U25-13 .SMA<1>

849: U3-2 U26-1 U5-1 U24-1 U2-1 .SMD ADDR<0>

850: U3-5 U26-2 U5-2 U24-2 U2-2 .SMD ADDR<1>

851: U3-6 U26-3 U5-3 U24-3 U2-3 .SMD ADDR<2>

852: U3-9 U26-4 U5-4 U24-4 U2-4 .SMD ADDR<3>

853: U3-12 U26-5 U5-5 U24-5 U2-5 .SMD ADDR<4>

854: U3-15 U26-16 U5-16 U24-16 U2-16 .SMD ADDR<5>

855: U3-16 U26-17 U5-17 U24-17 U2-17 .SMD ADDR<6>

856: U3-19 U26-18 U5-18 U24-18 U2-18 .SMD ADDR<7>

857: U6-5 U5-19 U24-19 U2-19 U26-19 .SMD ADDR<8>

858: U158-26 U187-13 .SPEAK DATA IN

859: J81-1 C126-2 .SPEAKER

860: U112-12 U187-14 .SPEECH CLK

861: U143-11 U143-10 U158-30 .SPEECH RQST L

862: U143-2 U174-5 .SPEECH SEL L

863: U15-12 RN6-3 JA36-1 .STEP L

864: U40-13 U19-4 U19-12 .SYNC BITS

865: U7-12 U9-15 .T BIT

866: U7-13 U9-19 .T2 BIT

867: C103-1 R5-1 J92-1 .TABLET CLK

868: U112-13 J93-1 R4-1 .TABLET DATA L

```
 869: U192-12                                .TC IN B
*** Only one pin in net
*** Run Has no outputs

 870: U80-18 U23-8                           .TESTCLK

 871: U166-6 U223-17 U224-17 U244-17 U245-17
 871: U223-13 U224-13 U244-13 U245-13        .TOP DISK

 872: J4-1 U181-12                           .TOP EXT A L

 873: U181-13 J73-1                          .TOP EXT B L

 874: U166-8                                 .TOP NET
*** Only one pin in net

 875: U166-11 U186-16 U185-16 U171-16 U170-16
 875: U170-9 U171-9 U186-9 U185-9            .TOP UPROC

 876: U111-12                                .TRANSMIT H
*** Only one pin in net

 877: U118-3 U118-11 U124-11 U46-16 U124-3
 877: U127-12 U159-18 U159-15 U159-9 U160-18
 877: U160-15 U160-9 U147-18                 .TZ CLK

 878: U85-6 JB12-1 U90-3 RN4-7 U67-11        .UNIT READY

 879: U16-9 JA26-1                           .UNIT SEL L

 880: U200-10 U68-16                         .UNLD DISK RQST L

 881: J137-1 U200-12 U193-12                 .UNLD EXT A RQST L

 882: J37-1 U200-13                          .UNLD EXT B RQST L

 883: U201-3                                 .UNLD NET RQST L
*** Only one pin in net

 884: U200-9 U194-13                         .UNLD UPROC RQST L

 885: U162-4 U129-2                          .UPROC ENB

 886: J53-1 U162-6                           .UPROC INT L

 887: U161-15 U83-9 U128-1 U85-13            .UPROC RDY

 888: U83-10 U129-7                          .UPROC RDY ENB

 889: J172-1 U83-8                           .UPROC RDY INT L

 890: U195-3 U194-9                          .UPROC RQST H
```

```
 891: U213-13 U146-1 U133-13 U174-6        .UPROC WR H

 892: U173-6 U132-5                        .USEC CLK OVFL H

 893: U196-14 U211-18                      .USEC I<2>

 894: U178-2 U180-4 U181-1 U179-3          .WA<1>

 895: U178-7 U180-5 U181-2 U179-6          .WA<2>

 896: U178-10 U180-12 U181-3 U179-10       .WA<3>

 897: U5-11 U27-2                          .WAIT H

 898: U145-21 U228-13 U175-13              .WCLK

 899: U149-15 U216-2                       .WCNT L

 900: U216-4 U221-15                       .WHI L

 901: U218-15 U217-15 U216-3 U220-15 U219-15
 901:                                      .WLO L

 902: U8-10 JB42-1                         .WR CLK +

 903: JB43-1                               .WR CLK -
*** Only one pin in net

 904: U40-1 U224-22 U244-22 U245-22 U223-22
 904:                                      .WR DATA

 905: JB39-1 U10-3 U10-4                   .WR DATA +

 906: JB40-1 U10-1 U10-2                   .WR DATA -

 907: JB30-1 U32-18 RN6-5                  .WR GATE

 908: U146-10 U130-6 U126-2 U159-23 U160-23
 908: U147-4 U145-3 U125-1 U23-9           .WR L

 909: U148-5 U216-5                        .WREG L

 910: U114-12 U57-1                        .X CONST ENB L

 911: U57-12                               .X MUX<0>
*** Only one pin in net

 912: U57-14                               .X MUX<1>
*** Only one pin in net

 913: U57-16                               .X MUX<2>
```

*** Only one pin in net

914: U57-18 .X MUX<3>
*** Only one pin in net

915: U114-14 .X SEL<0>
*** Only one pin in net
*** Run Has no outputs

916: U114-13 .X SEL<1>
*** Only one pin in net
*** Run Has no outputs

917: U32-9 .Y MUX<0>
*** Only one pin in net

918: U32-7 .Y MUX<1>
*** Only one pin in net

919: U32-5 .Y MUX<2>
*** Only one pin in net

920: U32-3 .Y MUX<3>
*** Only one pin in net

921: U32-19 .Y SEL<3>
*** Only one pin in net
*** Run Has no outputs

922: U46-18 U144-6 R3-2 U158-20 U157-20
922: .Z CLK

923: RN8-4 U144-16 U126-17 U158-5 U157-5
923: .Z80 INT L

924: RN8-2 U144-24 U127-6 .Z80 WAIT L

MULTI MEG LANDSCAPE		Word 0		Word 1		Word 2		Word 3	
		MEM 0,4		MEM 1,5		MEM 2,6		MEM 3,7	
		RAS 0		RAS 0		RAS 0		RAS 0	
		CAS A 1		CAS A 1		CAS A 1		CAS A 1	
BITS	DATA	BANK A		BANK A		BANK A		BANK A	
0	1	U1		U3		U5		U7	
1	2	U14		U16		U18		U20	
2	4	U27		U29		U31		U33	
3	10	U40		U42		U44		U46	
4	20	U53		U55		U57		U59	
5	40	U65		U67		U69		U71	
6	100	U78		U80		U82		U84	
7	200	U91		U93		U95		U97	
8	400	U104		U106		U108		U110	
9	1K	U117		U119		U121		U123	
10	2K	U131		U133		U135		U137	
11	4K	U144		U146		U148		U150	
12	10K	U157		U159		U161		U163	
13	20K	U170		U172		U174		U176	
14	40K	U182		U184		U186		U188	
15	100K	U196		U198		U200		U202	
P	PAR	U209		U211		U213		U215	

COPYRIGHT (c) 1984,1985

THIS DOCUMENT IS NOT TO BE REPRODUCED IN ANY FORM OR TRANSMITTED IN WHOLE OR IN PART, WITHOUT PRIOR WRITTEN AUTHORIZATION OF PERQ SYSTEMS CORPORATION.

TITLE: 2 Meg Memory Array

array

PERQ

DESIGNED	RUSS SCHWER	
DRAWN	CERTICH	22 Mar 84
UPDATED	CERTICH	03 Jan 85

SIZE	CODE	IDENTIFICATION	VAR	REV
A	11	0245	02	A

PROJ : 2 MEGABYTE LANDSCAPE / w/256k MEMORY

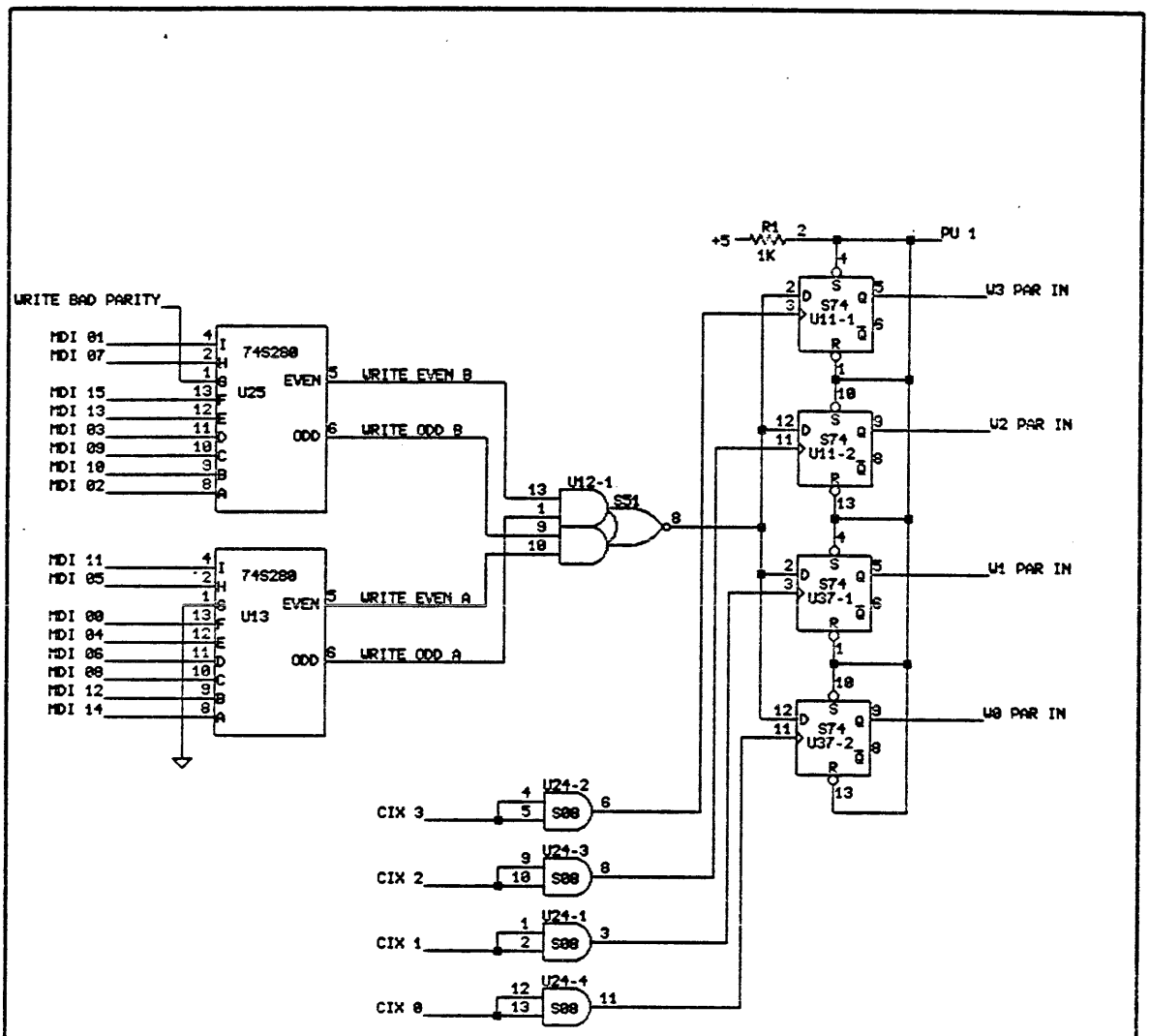

COPYRIGHT (c) 1984

THIS DOCUMENT IS NOT TO BE REPRODUCED IN ANY FORM OR TRANSMITTED IN WHOLE OR IN PART, WITHOUT PRIOR WRITTEN AUTHORIZATION OF PERQ SYSTEMS CORPORATION.

TITLE: MEMORY DATA IN PARITY CALCULATION

LMEM01

PERQ

DESIGNED	RUSS SCHWER		SIZE	CODE	IDENTIFICATION	VAR	REV
DRAWN	27 DEC 84	STECK	A	1 1	0 2 4 5 -	0 2	A
UPDATED			PROJ :	2 MEGABYTE LANDSCAPE MEMORY w/256k		PAGE 1	OF 27

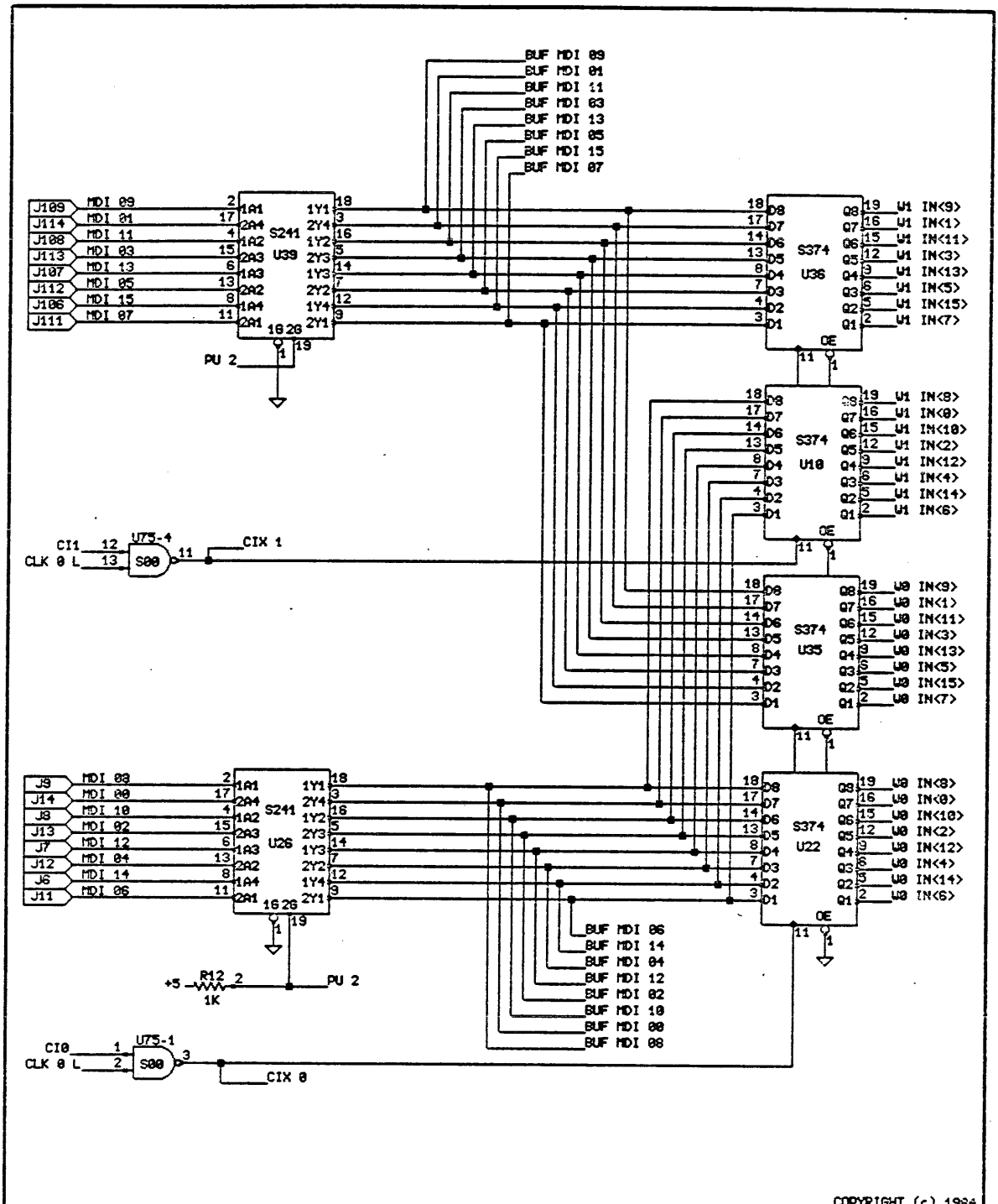

COPYRIGHT (c) 1984

THIS DOCUMENT IS NOT TO BE REPRODUCED IN ANY FORM OR TRANSMITTED IN WHOLE OR IN PART, WITHOUT PRIOR WRITTEN AUTHORIZATION OF PERQ SYSTEMS CORPORATION.

TITLE: MEMORY DATA INPUT REGISTERS : WORDS 0 AND 1

LMEM02

PERQ

DESIGNED	RUSS SCHWER		SIZE	CODE	IDENTIFICATION	VAR	REV
DRAWN	27 DEC 84	STECK	A	1 1	0 2 4 5 -	0 2	A
UPDATED			PROJ :	2 MEGABYTE LANDSCAPE MEMORY w/256k		PAGE 2	OF 27

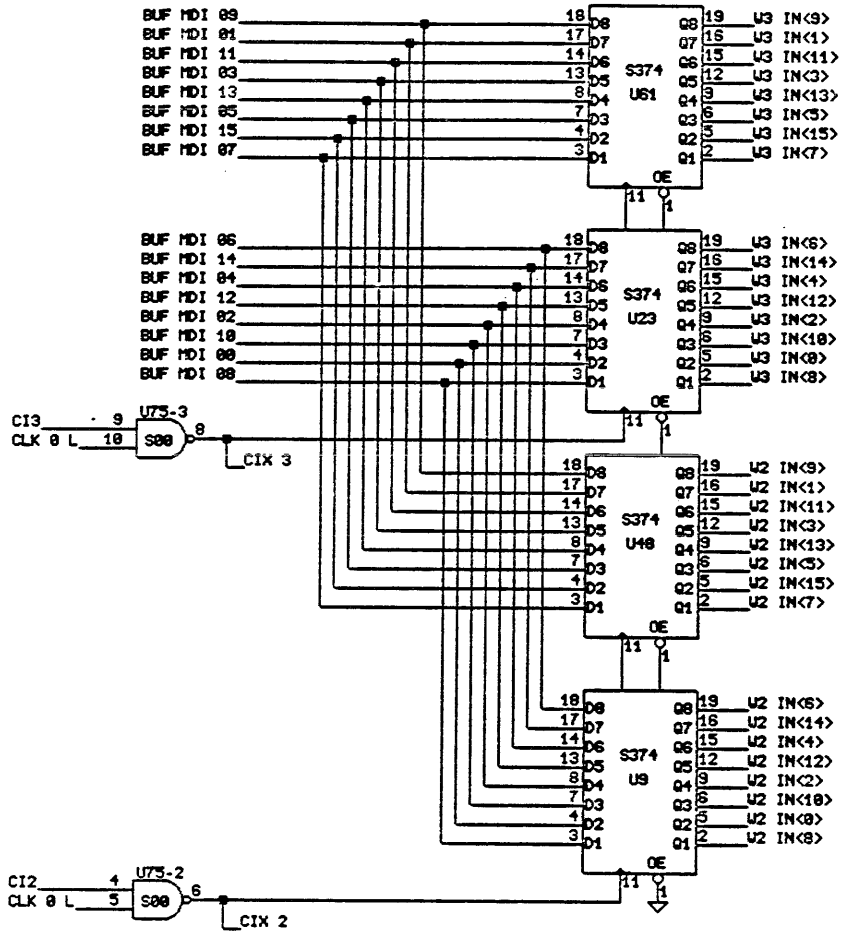

COPYRIGHT (c) 1984

THIS DOCUMENT IS NOT TO BE REPRODUCED IN ANY FORM OR TRANSMITTED IN WHOLE OR IN PART, WITHOUT PRIOR WRITTEN AUTHORIZATION OF PERQ SYSTEMS CORPORATION.

TITLE: MEMORY DATA INPUT REGISTERS : WORDS 2 AND 3

LMEM03

PERQ

DESIGNED	RUSS SCHWER		SIZE	CODE	IDENTIFICATION	VAR	REV
DRAWN	27 DEC 84	STECK	A	1 1	0 2 4 5 -	0 2	A
UPDATED			PROJ :	2 MEGABYTE LANDSCAPE MEMORY w/256k		PAGE 3	OF 27

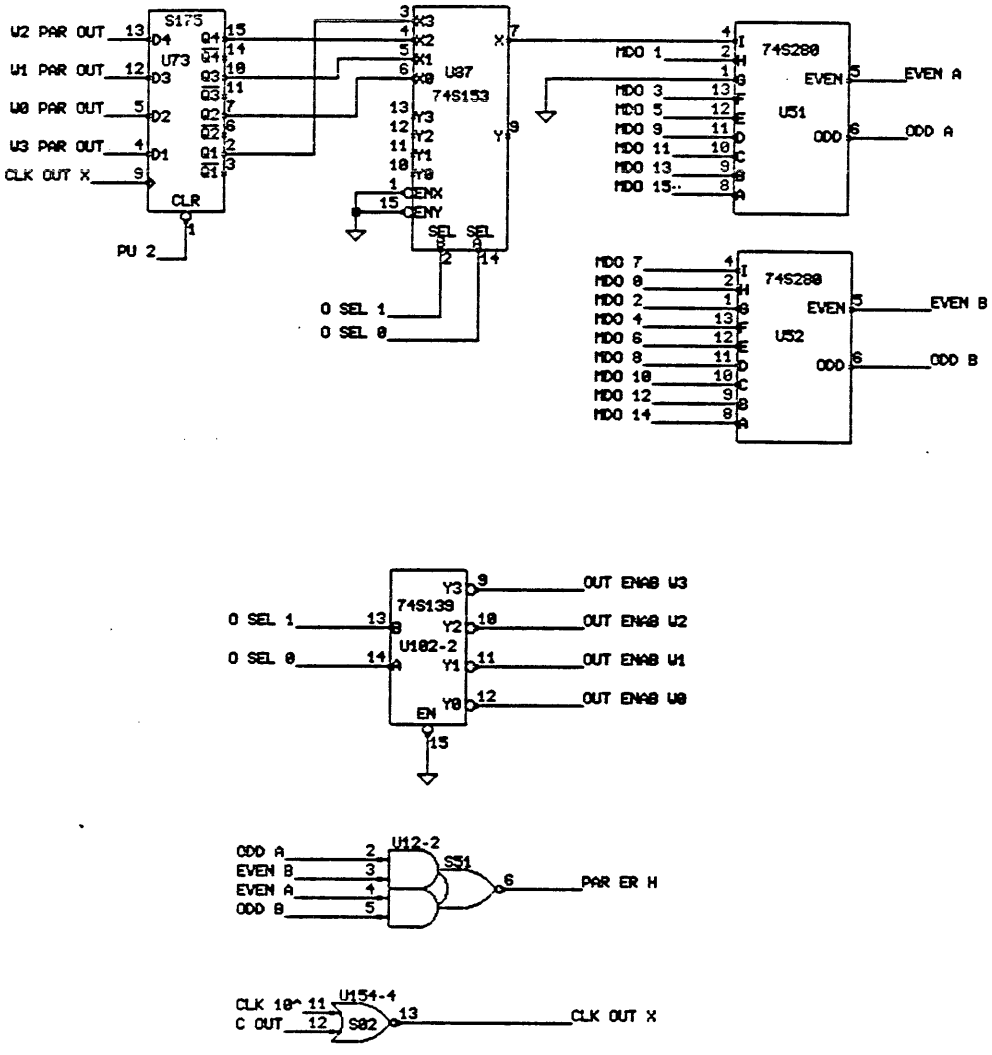

COPYRIGHT (c) 1984

THIS DOCUMENT IS NOT TO BE REPRODUCED IN ANY FORM OR TRANSMITTED IN WHOLE OR IN PART, WITHOUT PRIOR WRITTEN AUTHORIZATION OF PERQ SYSTEMS CORPORATION.

TITLE	MEMORY DATA OUTPUT						LMEM04
PERQ	DESIGNED	RUSS SCHWER		SIZE	CODE	IDENTIFICATION	VAR / REV
	DRAWN	27 DEC 84	STECK	A	1 1	0 2 4 5 -	0 2 / A
	UPDATED			PROJ :	2 MEGABYTE LANDSCAPE MEMORY w/256k		PAGE 4 OF 27

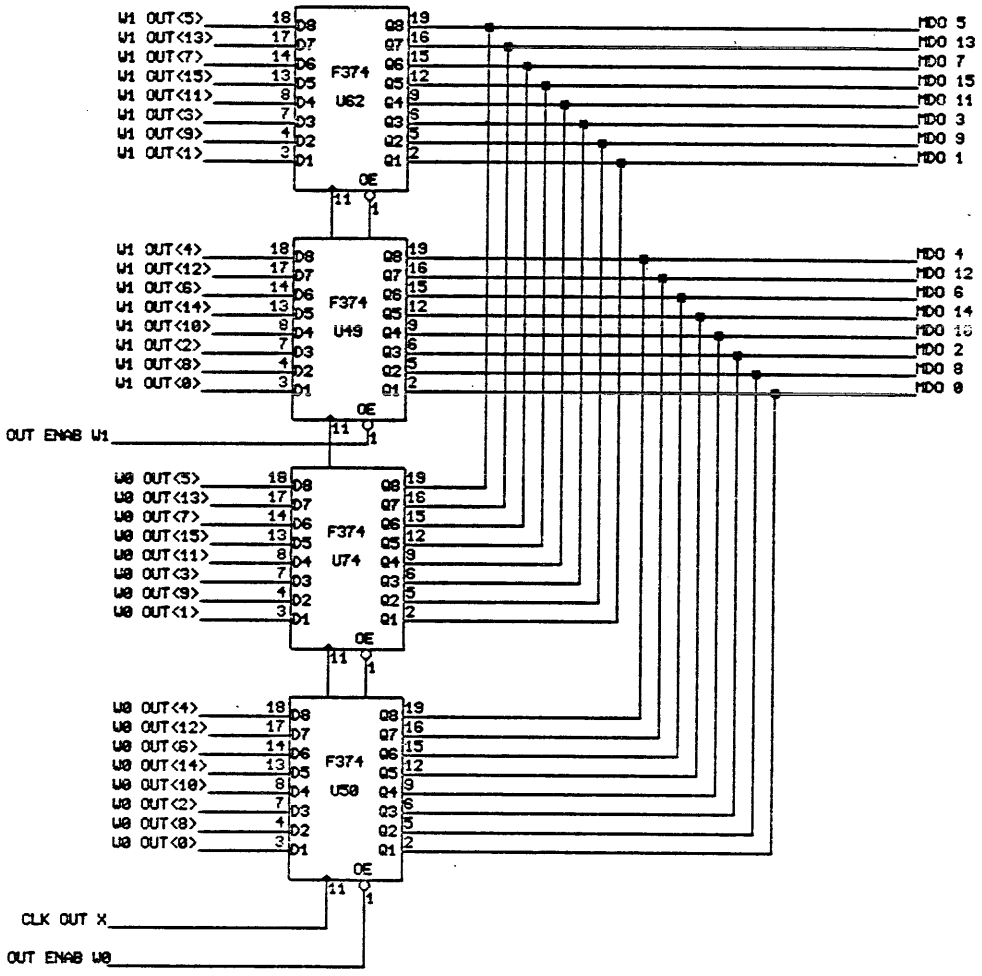

COPYRIGHT (c) 1984

THIS DOCUMENT IS NOT TO BE REPRODUCED IN ANY FORM OR TRANSMITTED IN WHOLE OR IN PART, WITHOUT PRIOR WRITTEN AUTHORIZATION OF PERQ SYSTEMS CORPORATION.

TITLE: DATA OUTPUT REGISTERS : WORDS 0 AND 1

LMEM05

PERQ

DESIGNED	RUSS SCHUER	
DRAWN	27 DEC 84	STECK
UPDATED		

SIZE	CODE	IDENTIFICATION	VAR	REV
A	1 1	0 2 4 5 -	0 2	A

PROJ : 2 MEGABYTE LANDSCAPE MEMORY w/256k

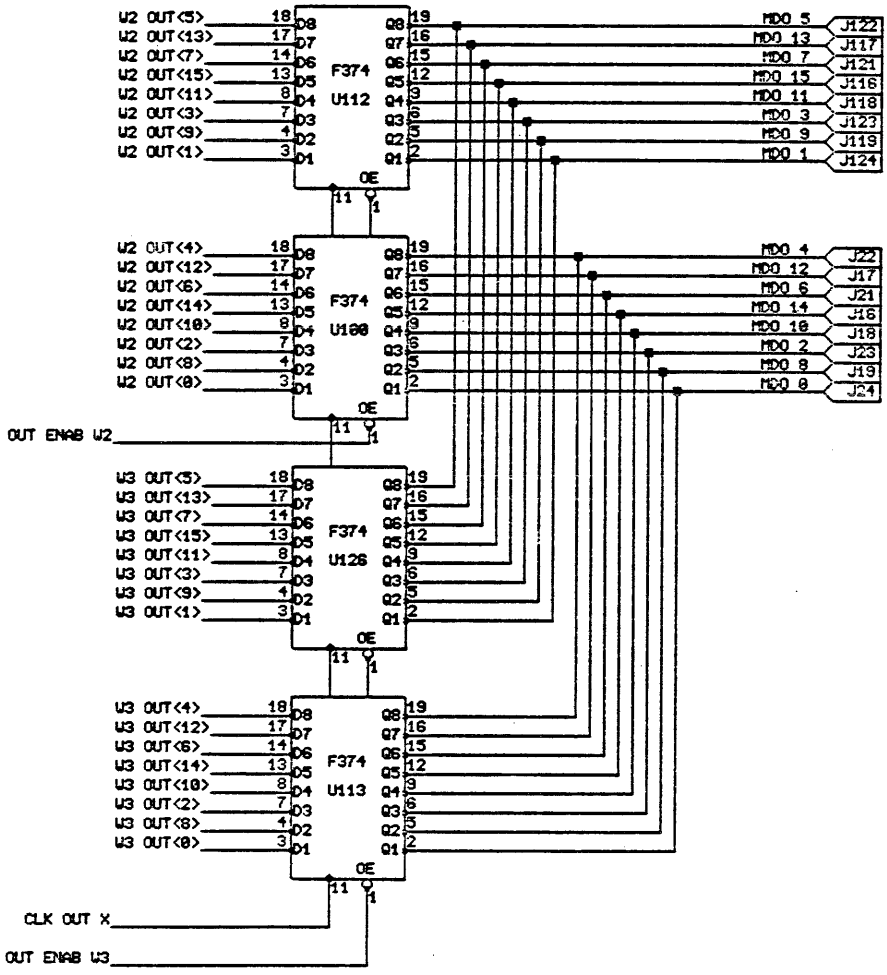

COPYRIGHT (c) 1984

THIS DOCUMENT IS NOT TO BE REPRODUCED IN ANY FORM OR TRANSMITTED IN WHOLE OR IN PART, WITHOUT PRIOR WRITTEN AUTHORIZATION OF PERQ SYSTEMS CORPORATION.

TITLE	DATA OUTPUT REGISTERS : WORDS 2 AND 3					LMEM26	
PERQ	DESIGNED	RUSS SCHWER		SIZE	CODE	IDENTIFICATION	WAR	REV
	DRAWN	27 DEC 84	STECK	A	1 1	8 2 4 5 -	0 2	A
	UPDATED			PROJ :	2 MEGABYTE LANDSCAPE MEMORY w/256k		PAGE 6 OF 27	

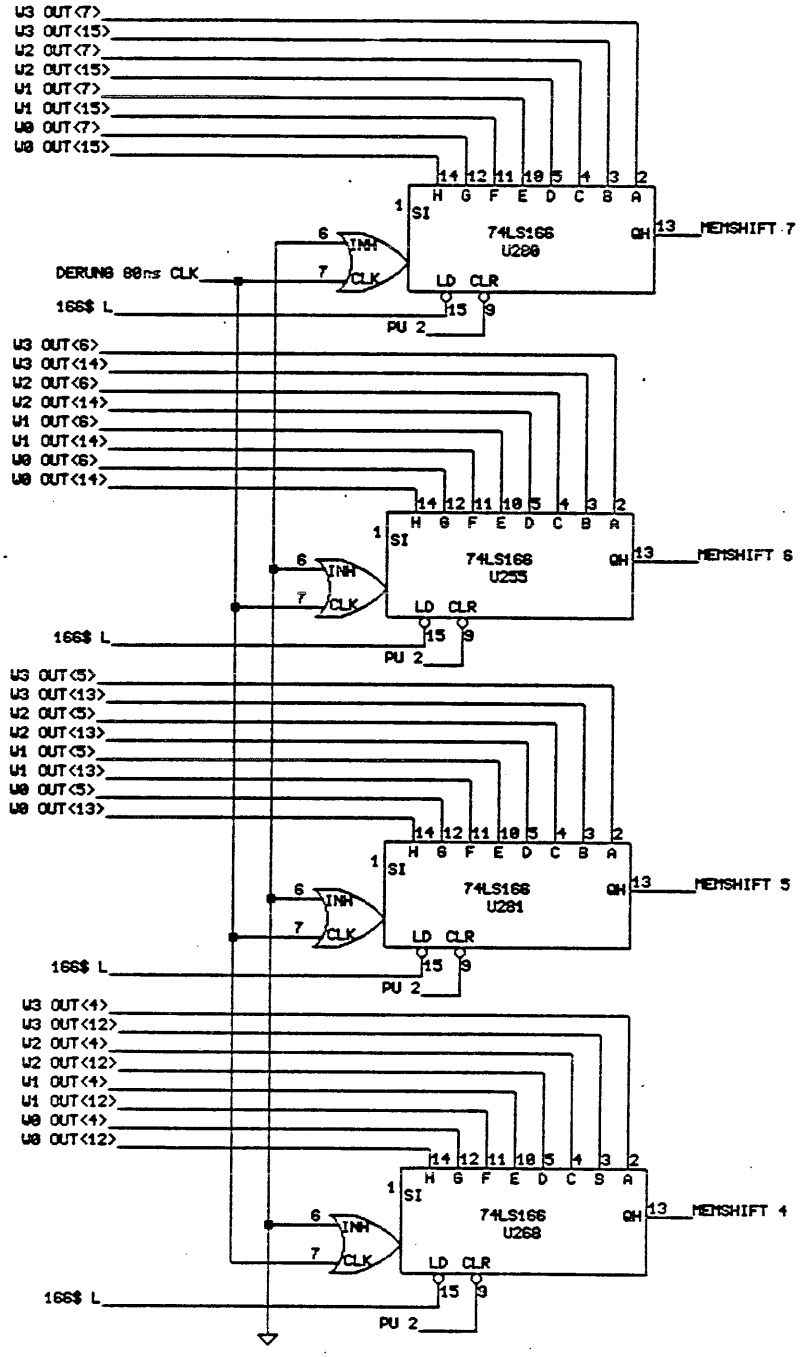

COPYRIGHT (c) 1984

THIS DOCUMENT IS NOT TO BE REPRODUCED IN ANY FORM OR TRANSMITTED IN WHOLE OR IN PART, WITHOUT PRIOR WRITTEN AUTHORIZATION OF PERQ SYSTEMS CORPORATION.

TITLE: MEMORY WORD MUX - 64 BITS to 8 BITS

LMEM07

PERQ

DESIGNED	RUSS SCHWER	
DRAWN	27 DEC 84	STECK
UPDATED		

SIZE	CODE	IDENTIFICATION	VAR	REV
A	11	0245-	02	A

PROJ : 2 MEGABYTE LANDSCAPE MEMORY w/256k

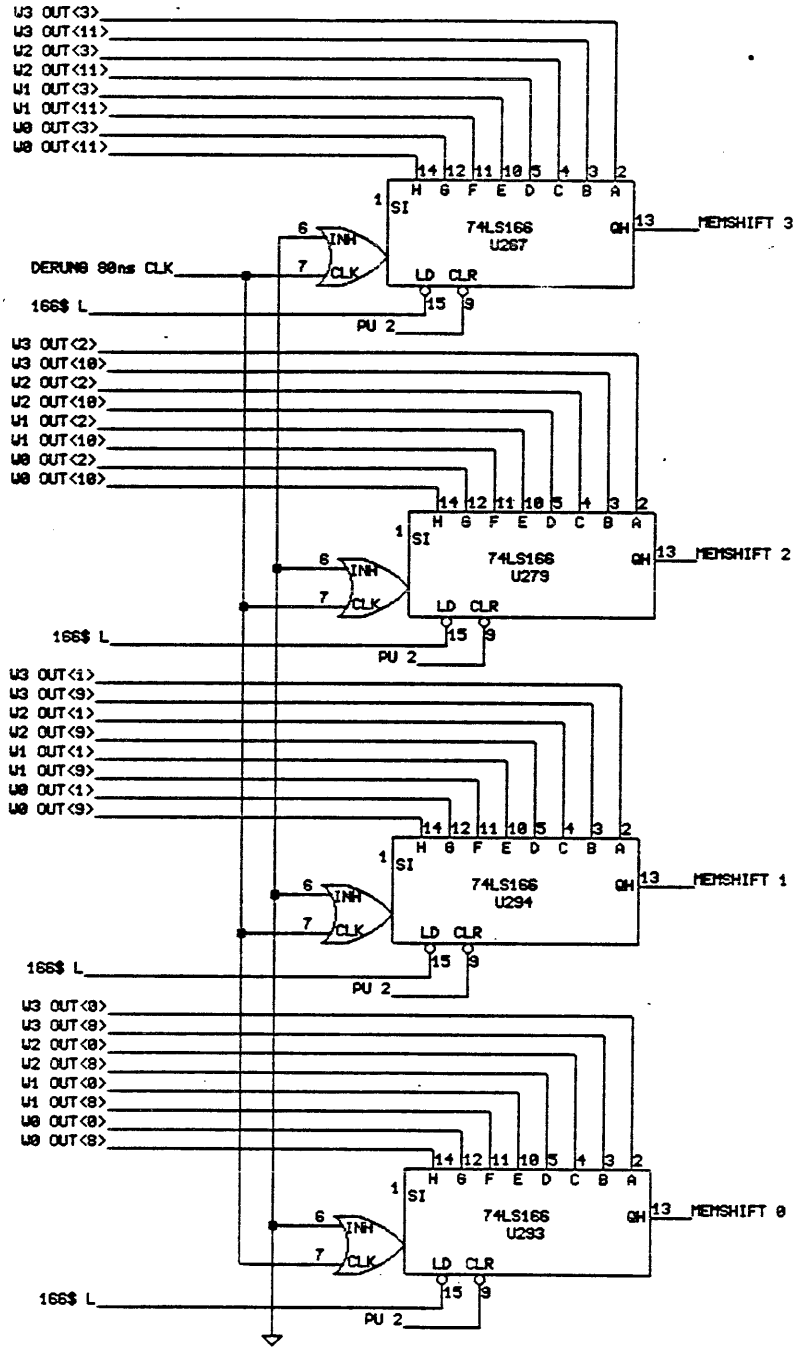

COPYRIGHT (c) 1984

THIS DOCUMENT IS NOT TO BE REPRODUCED IN ANY FORM OR TRANSMITTED IN WHOLE OR IN PART, WITHOUT PRIOR WRITTEN AUTHORIZATION OF PERQ SYSTEMS CORPORATION.

TITLE: MEMORY WORD MUX - 64 BITS to 8 BITS

LMEM08

PERQ

DESIGNED	RUSS SCHUER	
DRAWN	27 DEC 84	STECK
UPDATED		

SIZE	CODE	IDENTIFICATION	VAR	REV
A	11	0245-	02	A

PROJ : 2 MEGABYTE LANDSCAPE MEMORY u/256k

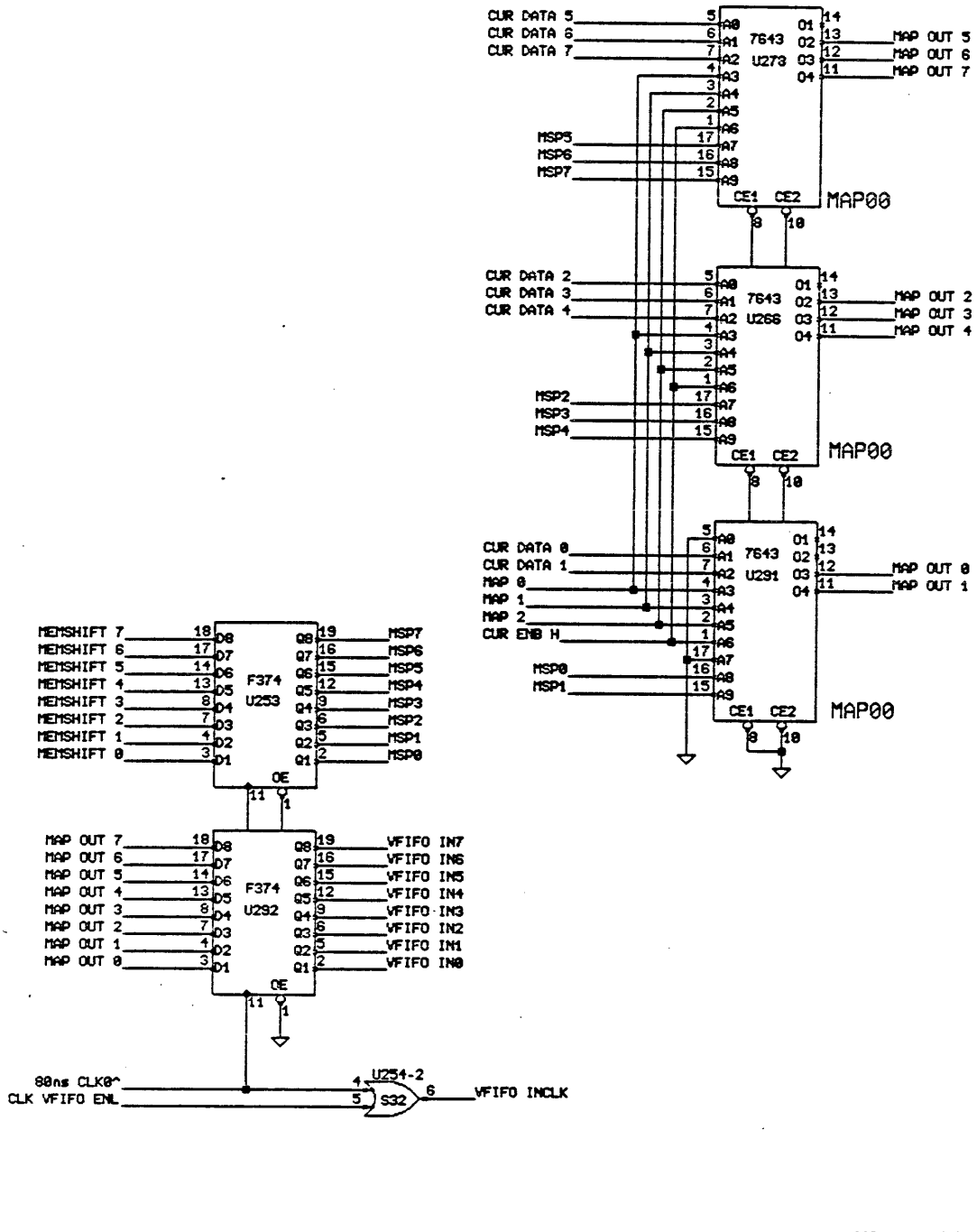

COPYRIGHT (c) 1984

THIS DOCUMENT IS NOT TO BE REPRODUCED IN ANY FORM OR TRANSMITTED IN WHOLE OR IN PART, WITHOUT PRIOR WRITTEN AUTHORIZATION OF PERQ SYSTEMS CORPORATION.

TITLE: MEMORY - CURSOR DATA MIXER FOR VIDEO

LMEM09

PERQ

DESIGNED	RUSS SCHWER		SIZE	CODE	IDENTIFICATION	VAR	REV
DRAWN	27 DEC 84	STECK	A	1 1	0 2 4 5 -	0 2	A
UPDATED			PROJ : 2 MEGABYTE LANDSCAPE MEMORY w/256k			PAGE 9 OF 27	

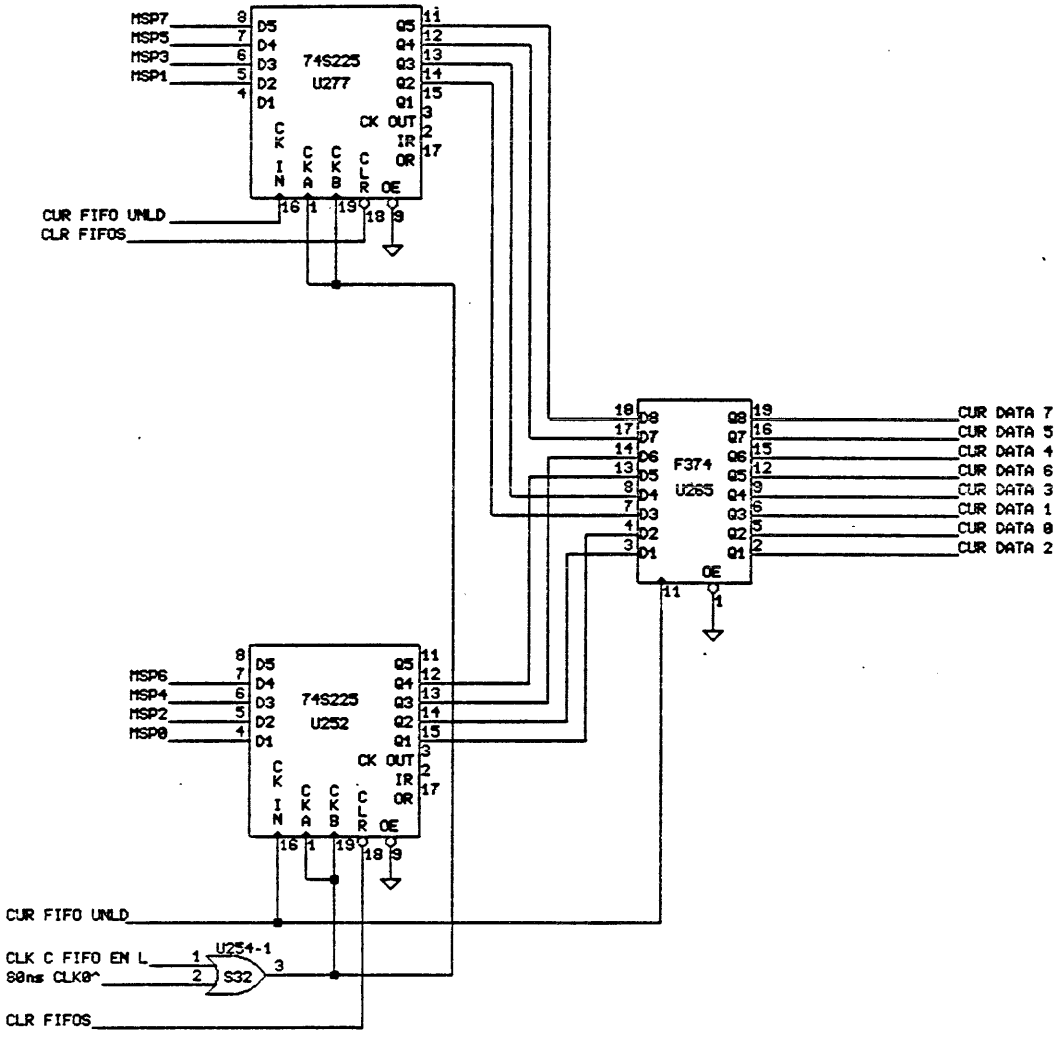

COPYRIGHT (c) 1984

THIS DOCUMENT IS NOT TO BE REPRODUCED IN ANY FORM OR TRANSMITTED IN WHOLE OR IN PART, WITHOUT PRIOR WRITTEN AUTHORIZATION OF PERQ SYSTEMS CORPORATION.

TITLE: CURSOR DATA FIFO

LMEM10

PERQ

DESIGNED	RUSS SCHWER		SIZE	CODE	IDENTIFICATION	VAR	REV
DRAWN	27 DEC 84	STECK	A	1 1	0 2 4 5 -	0 2	A
UPDATED			PROJ :	2 MEGABYTE LANDSCAPE MEMORY w/256k		PAGE 10 OF 27	

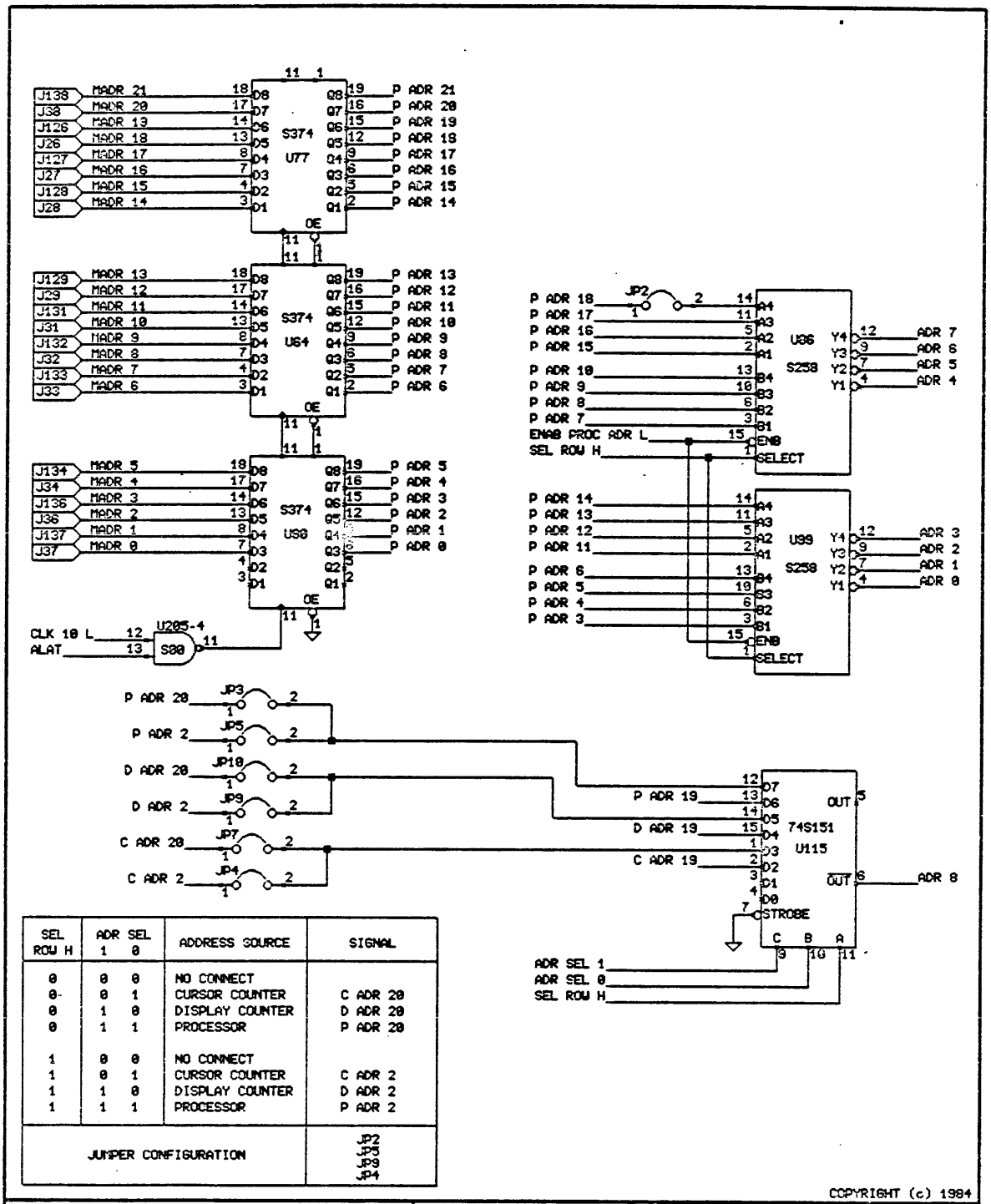

SEL ROW H	ADR SEL 1	ADR SEL 0	ADDRESS SOURCE	SIGNAL
0	0	0	NO CONNECT	
0	0	1	CURSOR COUNTER	C ADR 20
0	1	0	DISPLAY COUNTER	D ADR 20
0	1	1	PROCESSOR	P ADR 20
1	0	0	NO CONNECT	
1	0	1	CURSOR COUNTER	C ADR 2
1	1	0	DISPLAY COUNTER	D ADR 2
1	1	1	PROCESSOR	P ADR 2
JUMPER CONFIGURATION				JP2 JP5 JP9 JP4

COPYRIGHT (c) 1984
THIS DOCUMENT IS NOT TO BE REPRODUCED IN ANY FORM OR TRANSMITTED IN WHOLE OR IN PART, WITHOUT PRIOR WRITTEN AUTHORIZATION OF PERQ SYSTEMS CORPORATION.

TITLE: PROCESSOR/IO MEMORY ADRESS MUX

LMEM11

PERQ

DESIGNED	RUSS SCHWER		
DRAWN	27 DEC 84	STECK	
UPDATED			

SIZE	CODE	IDENTIFICATION	VAR	REV
A	11	0245-	02	A

PROJ : 2 MEGABYTE LANDSCAPE MEMORY w/256k

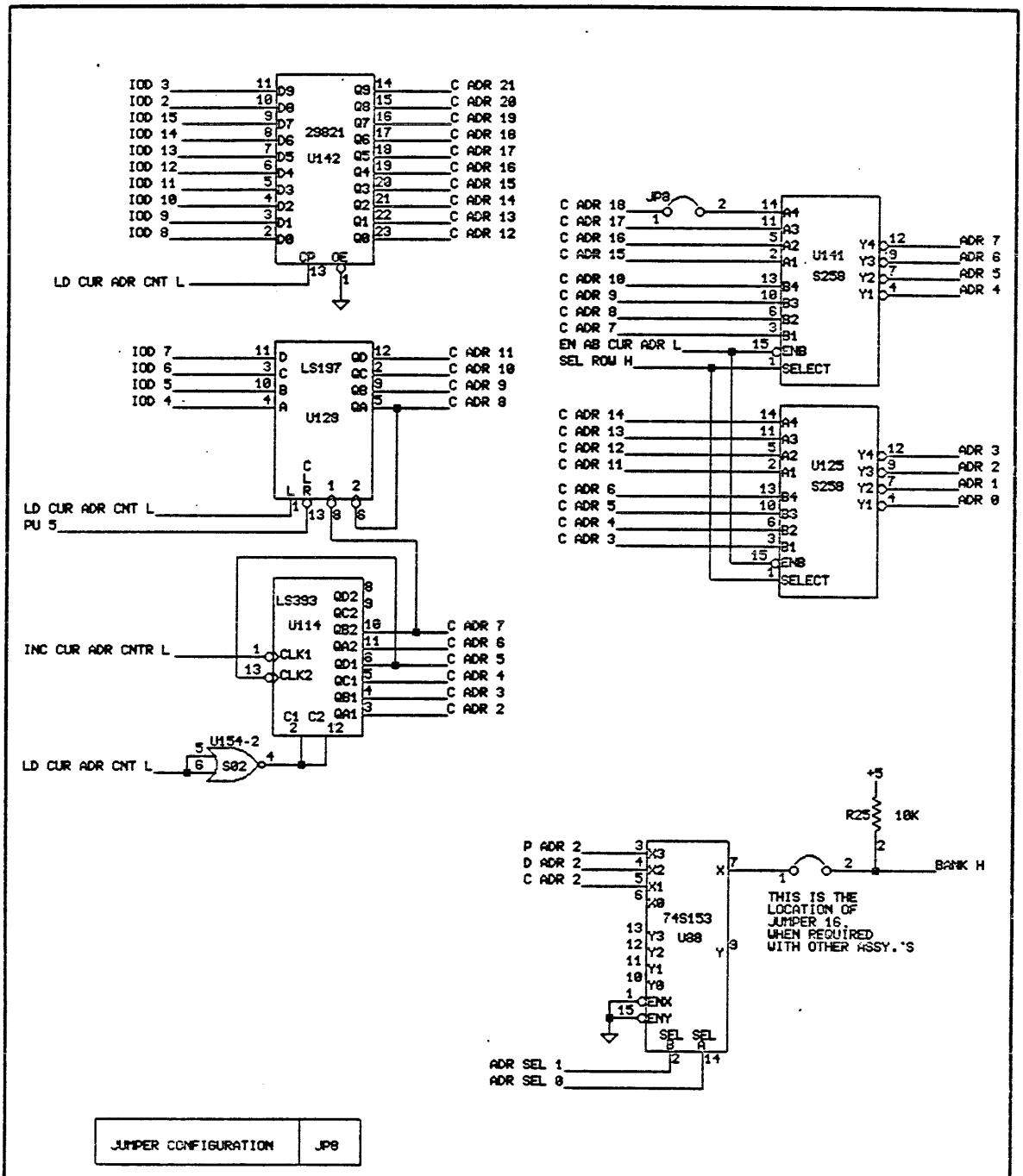

JUMPER CONFIGURATION	JP8

COPYRIGHT (c) 1984

THIS DOCUMENT IS NOT TO BE REPRODUCED IN ANY FORM OR TRANSMITTED IN WHOLE OR IN PART, WITHOUT PRIOR WRITTEN AUTHORIZATION OF PERQ SYSTEMS CORPORATION.

TITLE: CURSOR ADDRESS GENERATION AND MUX

LMEM12

PERQ

DESIGNED	RUSS SCHUER	
DRAWN	27 DEC 84	STECK
UPDATED		

SIZE	CODE	IDENTIFICATION	VAR	REV
A	11	0245-	02	A

PROJ : 2 MEGABYTE LANDSCAPE MEMORY w/256k

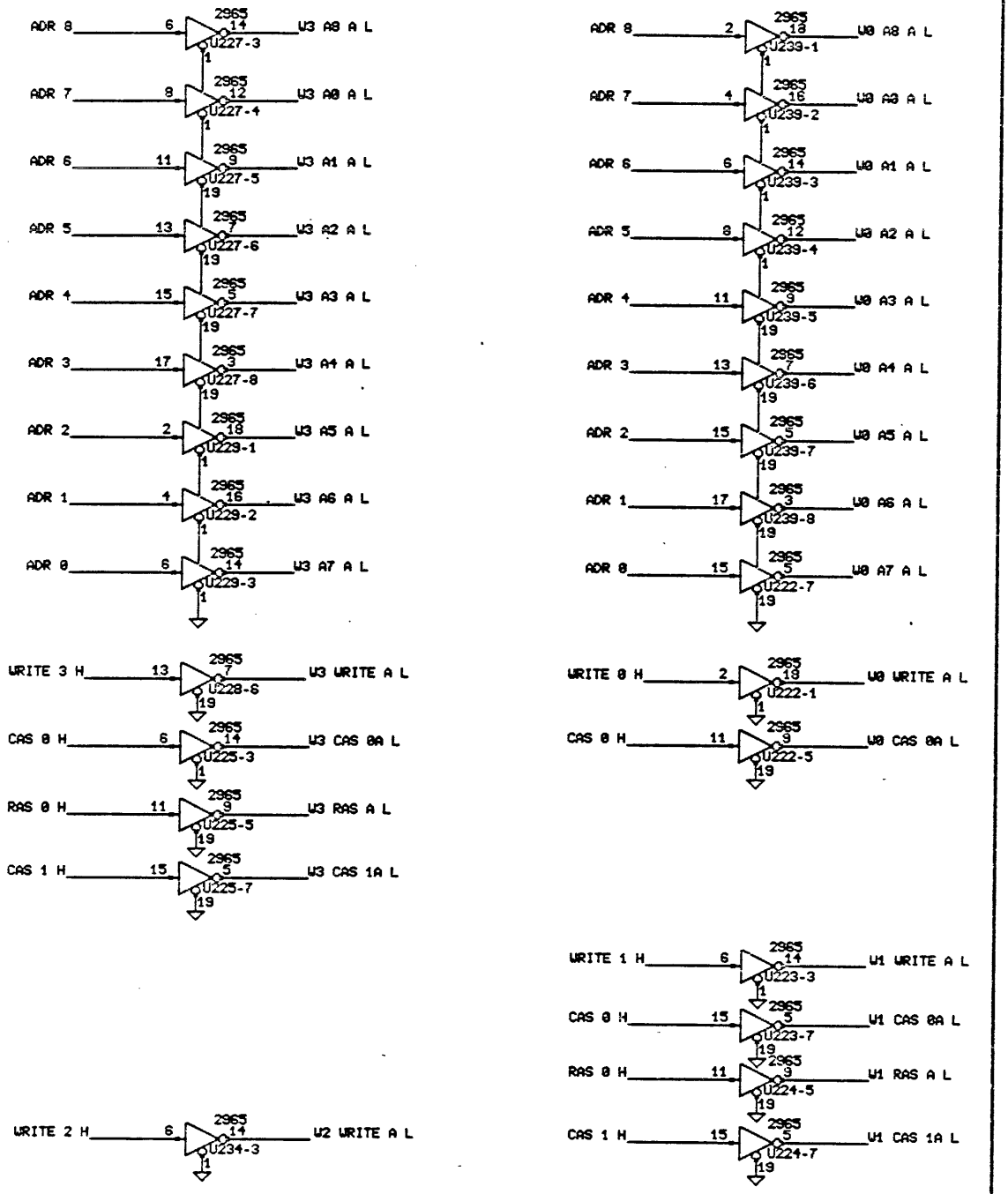

COPYRIGHT (c) 1984

THIS DOCUMENT IS NOT TO BE REPRODUCED IN ANY FORM OR TRANSMITTED IN WHOLE OR IN PART, WITHOUT PRIOR WRITTEN AUTHORIZATION OF PERQ SYSTEMS CORPORATION.

TITLE: MEMORY ADDRESS DRIVER WORD 3/ WORD 2/ WORD 1/ WORD 0

LMEM13

PERQ

DESIGNED	RUSS SCHUER		SIZE	CODE	IDENTIFICATION	VAR	REV
DRAWN	27 DEC 84	STECK	A	1 1	0 2 4 5 -	0 2	A
UPDATED			PROJ : 2 MEGABYTE LANDSCAPE MEMORY w/256k			PAGE 13 OF 27	

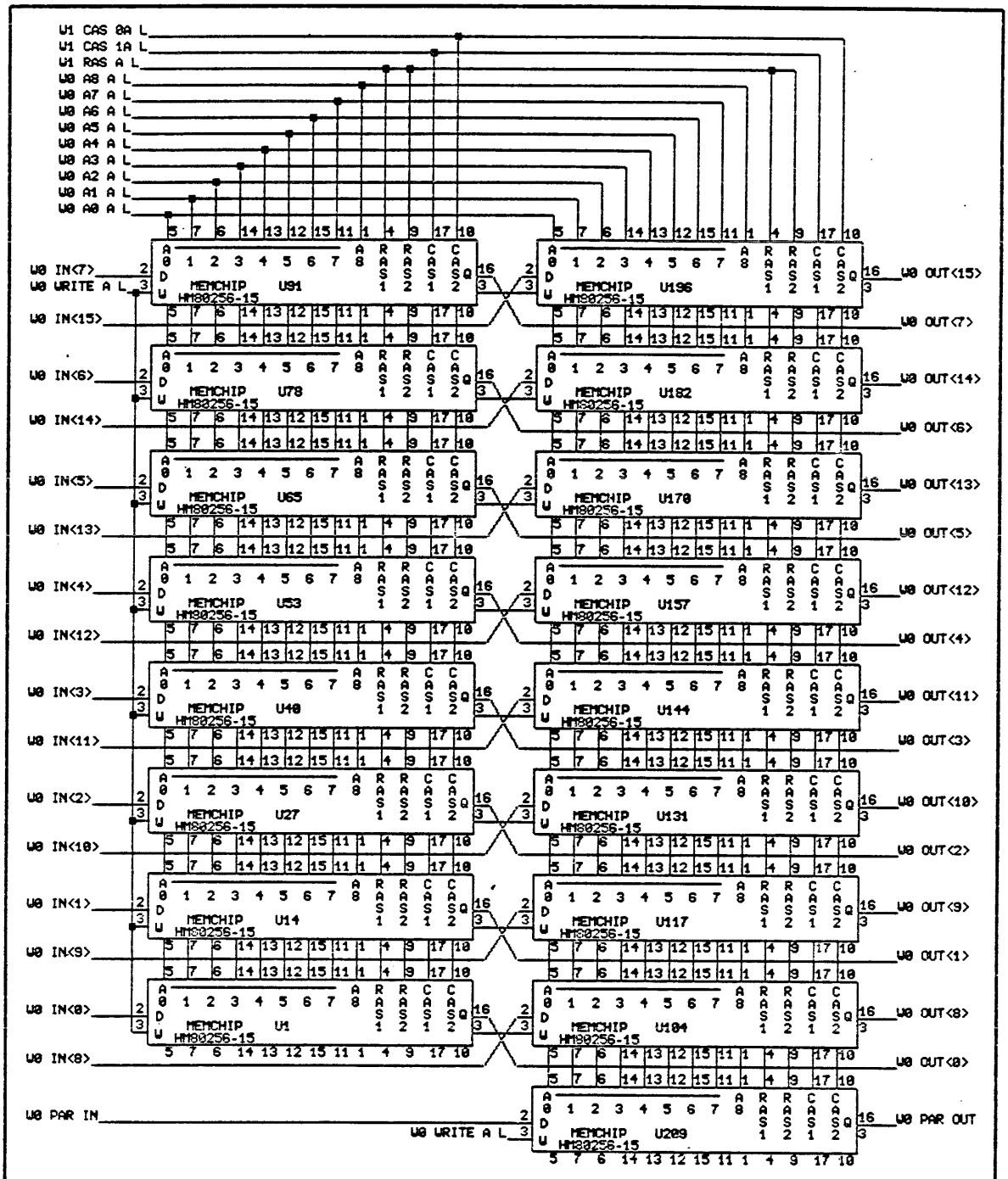

* ALL MEMCHIPS SHOWN ARE 256K RAM.

COPYRIGHT (c) 1984

THIS DOCUMENT IS NOT TO BE REPRODUCED IN ANY FORM OR TRANSMITTED IN WHOLE OR IN PART, WITHOUT PRIOR WRITTEN AUTHORIZATION OF PERQ SYSTEMS CORPORATION.

TITLE: WORD 0 BANK A

LMEM14

PERQ

DESIGNED	RUSS SCHWER		
DRAWN	27 DEC 84	STECK	
UPDATED			

SIZE	CODE	IDENTIFICATION	VAR	REV
A	11	.0245-	02	A

PROJ : 2 MEGABYTE LANSCAPE MEMORY w/256k

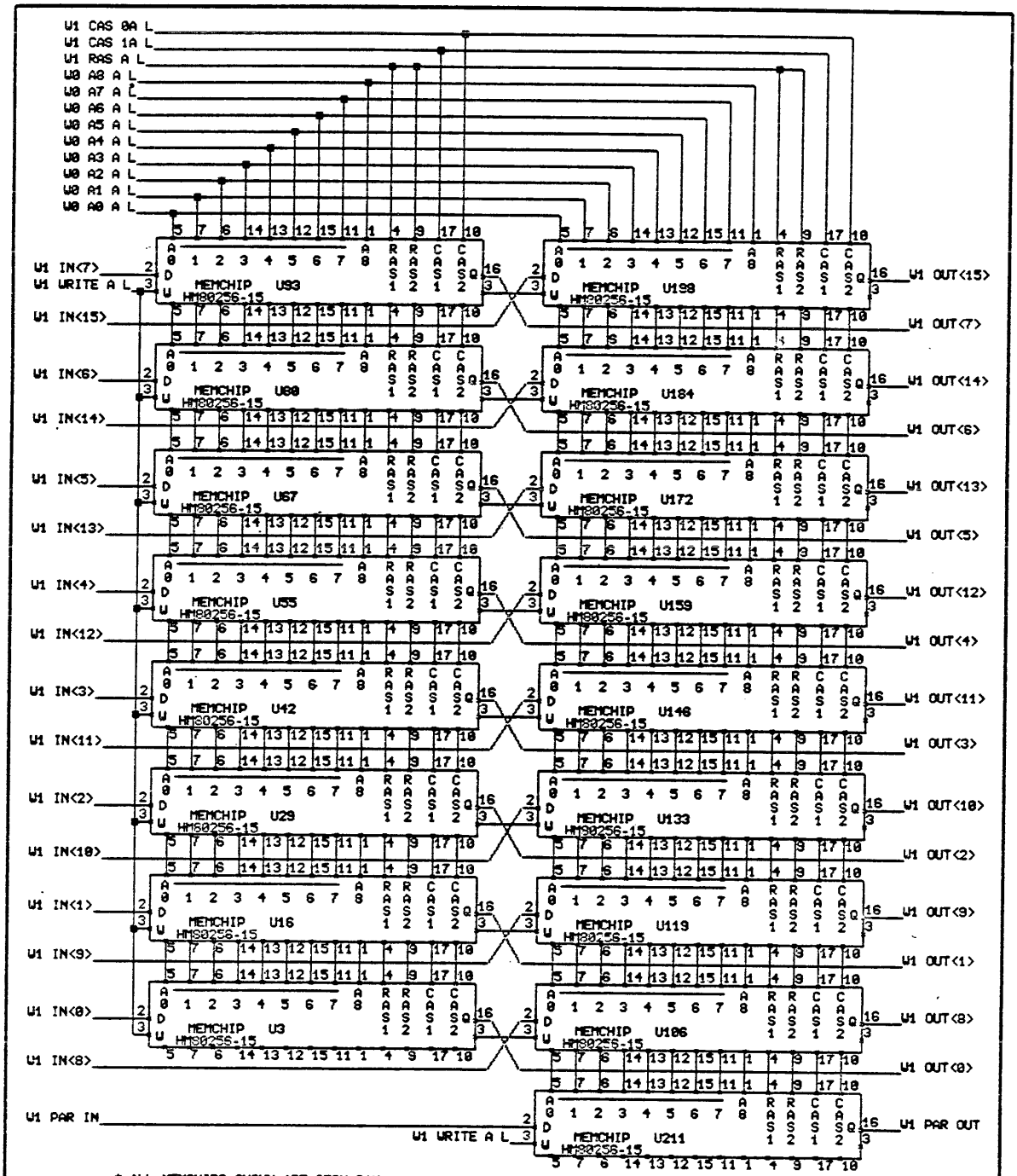

* ALL MEMCHIPS SHOWN ARE 256K RAM.

COPYRIGHT (c) 1984

THIS DOCUMENT IS NOT TO BE REPRODUCED IN ANY FORM OR TRANSMITTED IN WHOLE OR IN PART, WITHOUT PRIOR WRITTEN AUTHORIZATION OF PERQ SYSTEMS CORPORATION.

TITLE: WORD 1 BANK A

LMEM15

PERQ

DESIGNED	RUSS SCHWER		SIZE	CODE	IDENTIFICATION	VAR	REV
DRAWN	27 DEC 84	STECK	A	11	0245-	02	A
UPDATED			PROJ :	2 MEGABYTE LANSCAPE MEMORY w/256k		PAGE	15 OF 27

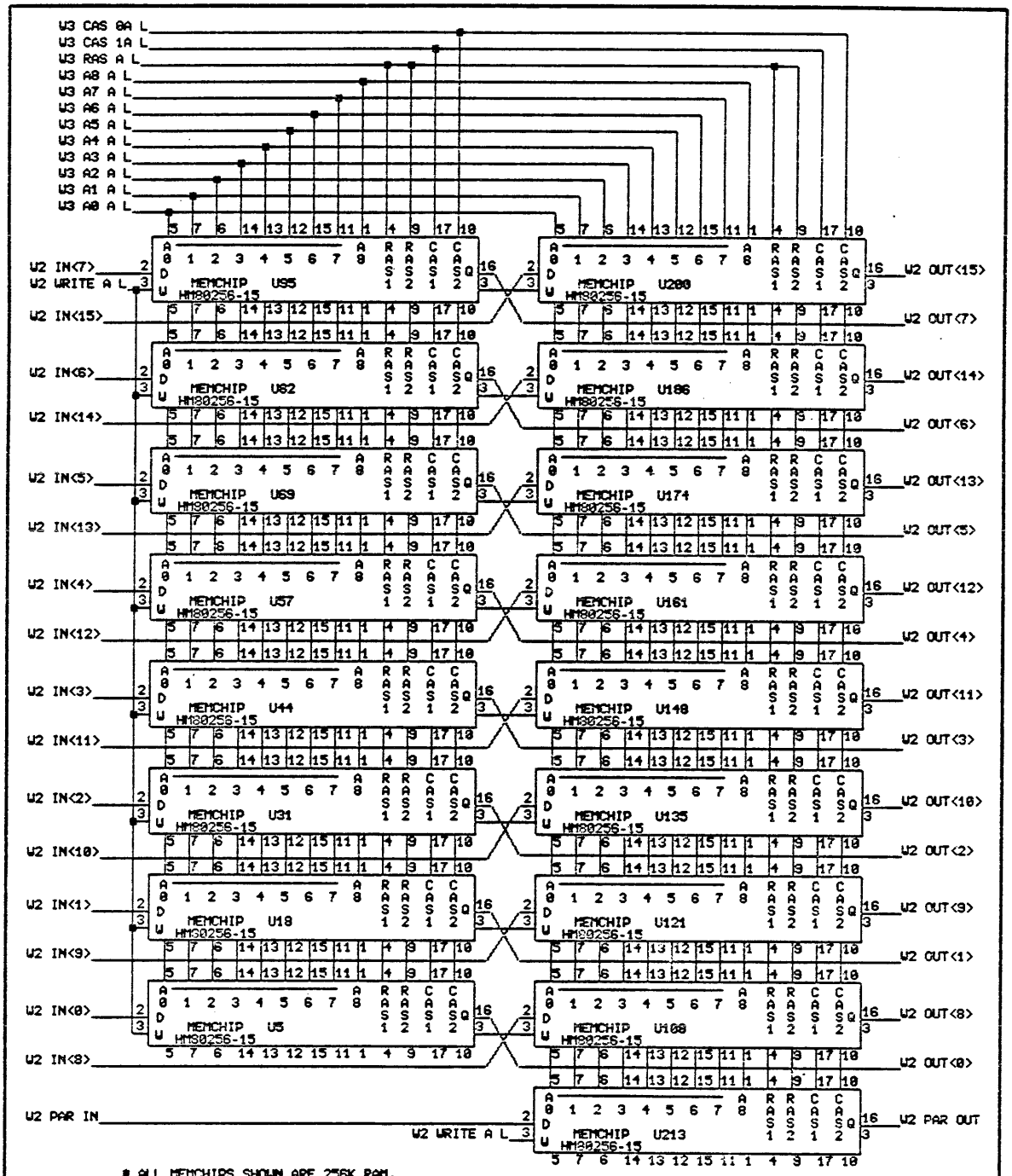

ALL MEMCHIPS SHOWN ARE 256K RAM.

COPYRIGHT (c) 1984

THIS DOCUMENT IS NOT TO BE REPRODUCED IN ANY FORM OR TRANSMITTED IN WHOLE OR IN PART, WITHOUT PRIOR WRITTEN AUTHORIZATION OF PERQ SYSTEMS CORPORATION.

TITLE: WORD 2 BANK A

LMEM16

PERQ

DESIGNED	RUSS SCHWER		
DRAWN	27 DEC 84	STECK	
UPDATED			

SIZE	CODE	IDENTIFICATION	VAR	REV
A	11	02450	02	A

PROJ : 2 MEGABYTE LANSCAPE MEMORY w/256k

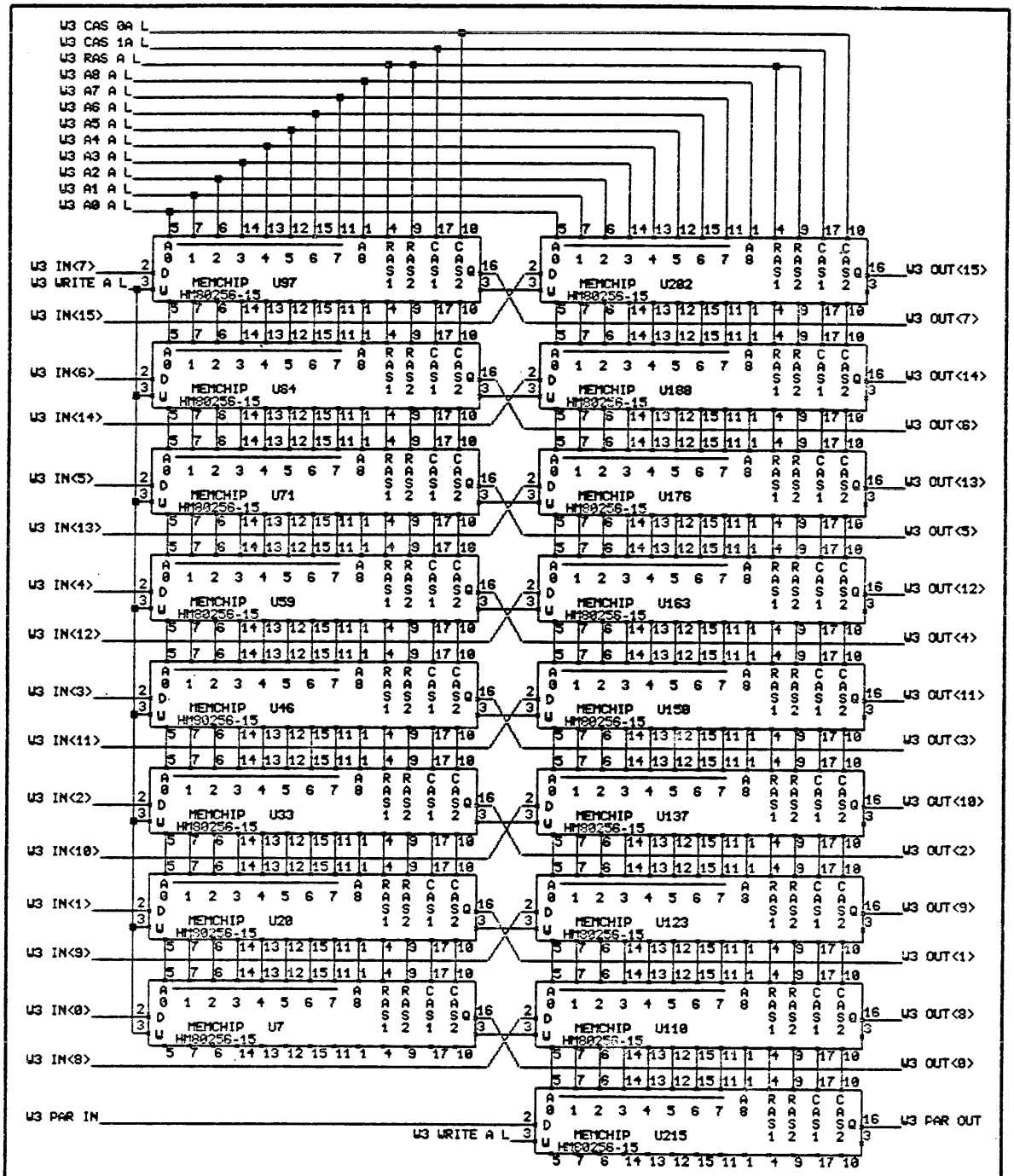

* ALL MEMCHIPS SHOWN ARE 256K RAM.

COPYRIGHT (c) 1984

THIS DOCUMENT IS NOT TO BE REPRODUCED IN ANY FORM OR TRANSMITTED IN WHOLE OR IN PART, WITHOUT PRIOR WRITTEN AUTHORIZATION OF PERQ SYSTEMS CORPORATION.

TITLE	WORD 3 BANK A					LMEM17	
PERQ	DESIGNED	RUSS SCHWER		SIZE	CODE	IDENTIFICATION	VAR	REV
	DRAWN	27 DEC 84	STECK	A	11	0245-	02	A
	UPDATED			PROJ :	2 MEGABYTE LANSCAPE MEMORY w/256k		PAGE 17 OF 27	

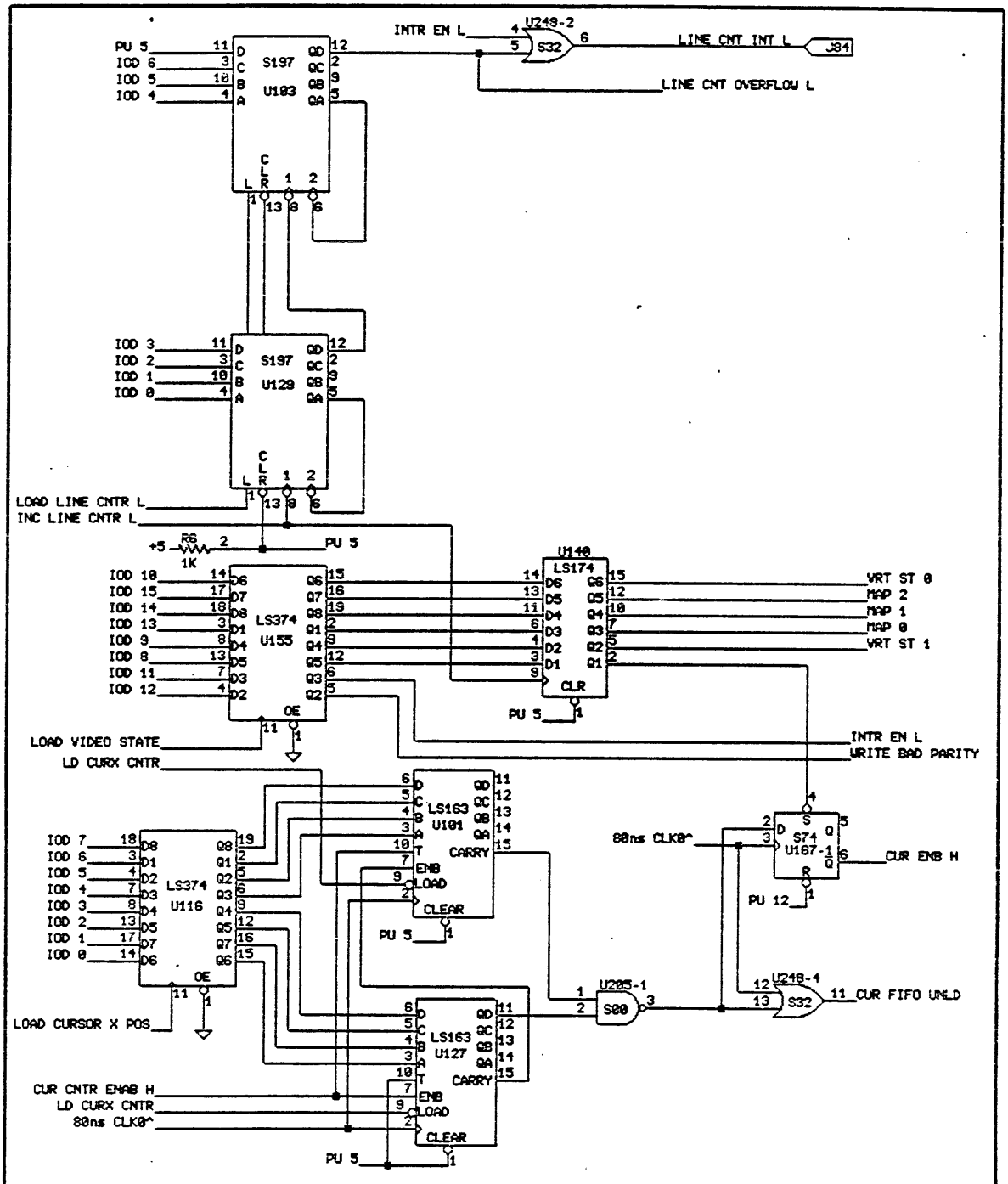

COPYRIGHT (c) 1984

THIS DOCUMENT IS NOT TO BE REPRODUCED IN ANY FORM OR TRANSMITTED IN UHOLE OR IN PART, WITHOUT PRIOR WRITTEN AUTHORIZATION OF PERQ SYSTEMS CORPORATION.

TITLE: IOB VIDEO CONTROL REGISTERS

LMEM18

PERQ

DESIGNED	RUSS SCHWER	
DRAWN	27 DEC 84	STECK
UPDATED		

SIZE	CODE	IDENTIFICATION	VAR	REV
A	11	0245-	02	A

PROJ : 2 MEGABYTE LANDSCAPE MEMORY u/256k

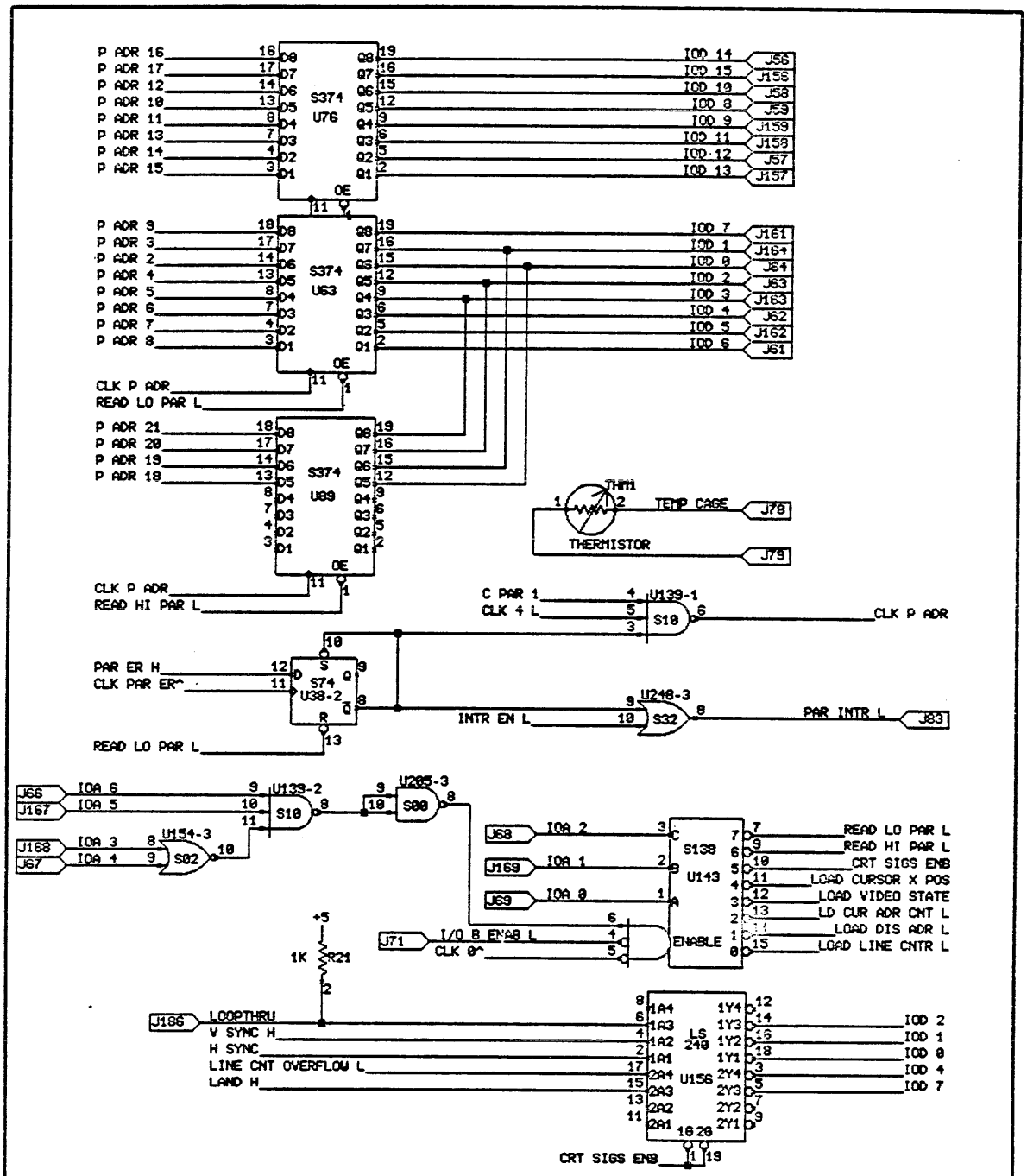

COPYRIGHT (c) 1984

THIS DOCUMENT IS NOT TO BE REPRODUCED IN ANY FORM OR TRANSMITTED IN WHOLE OR IN PART, WITHOUT PRIOR WRITTEN AUTHORIZATION OF PERQ SYSTEMS CORPORATION.

TITLE: I/O STATUS REGISTERS

LMEM19

PERQ

DESIGNED	RUSS SCHWER		
DRAWN	27 DEC 84	STECK	
UPDATED			

SIZE	CODE	IDENTIFICATION	VAR	REV
A	11	0245 -	02	A

PROJ : 2 MEGABYTE LANDSCAPE MEMORY w/256k

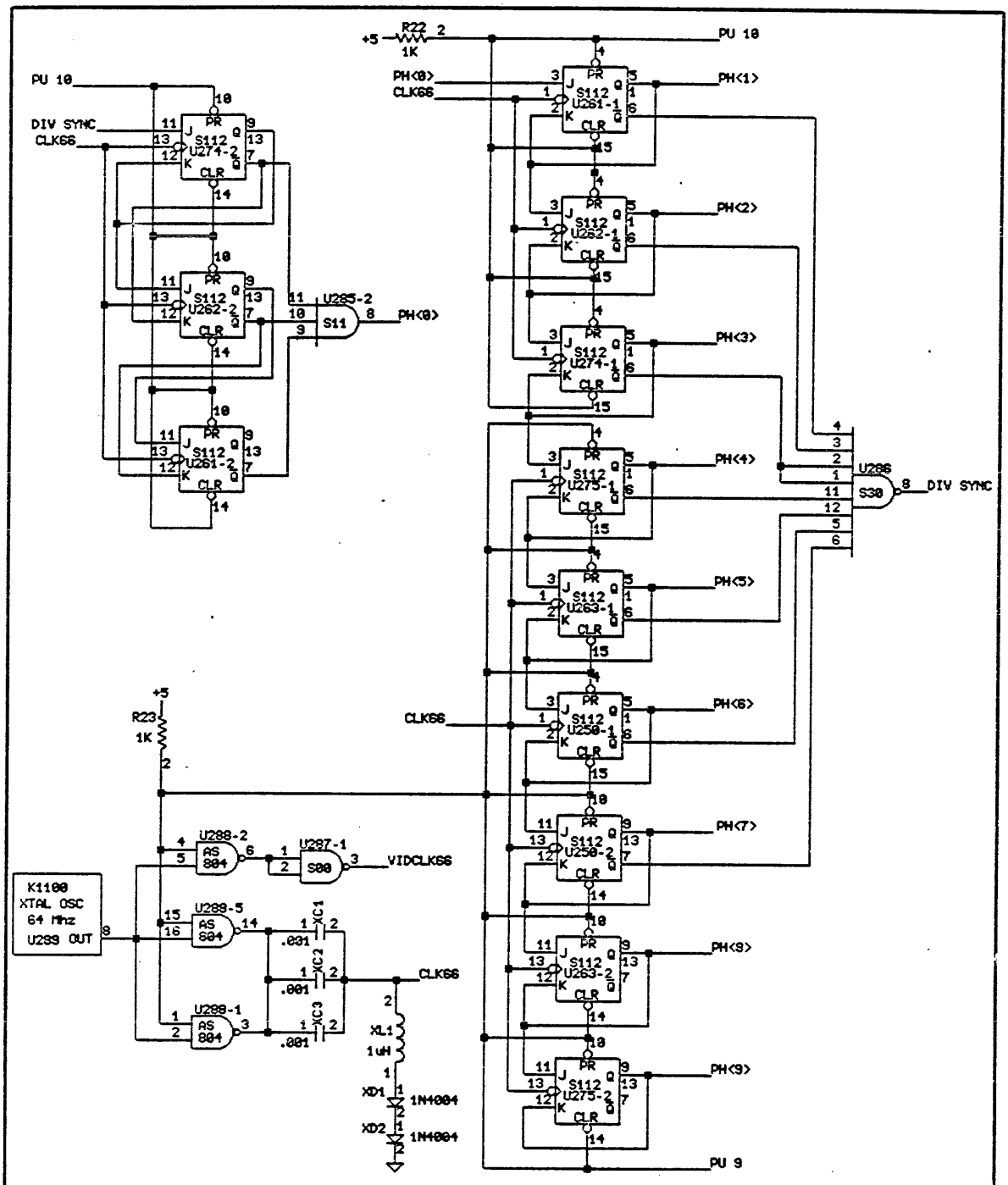

COPYRIGHT (c) 1984

THIS DOCUMENT IS NOT TO BE REPRODUCED IN ANY FORM OR TRANSMITTED IN WHOLE OR IN PART, WITHOUT PRIOR WRITTEN AUTHORIZATION OF PERQ SYSTEMS CORPORATION.

TITLE: CLOCK PHASE GENERATION LOGIC

LMEM20

PERQ

DESIGNED	RUSS SCHWER	
DRAWN	27 DEC 84	STECK
UPDATED		

SIZE	CODE	IDENTIFICATION	VAR	REV
A	1 1	0 2 4 5 -	0 2	A

PROJ : 2 MEGABYTE LANDSCAPE MEMORY w/256k

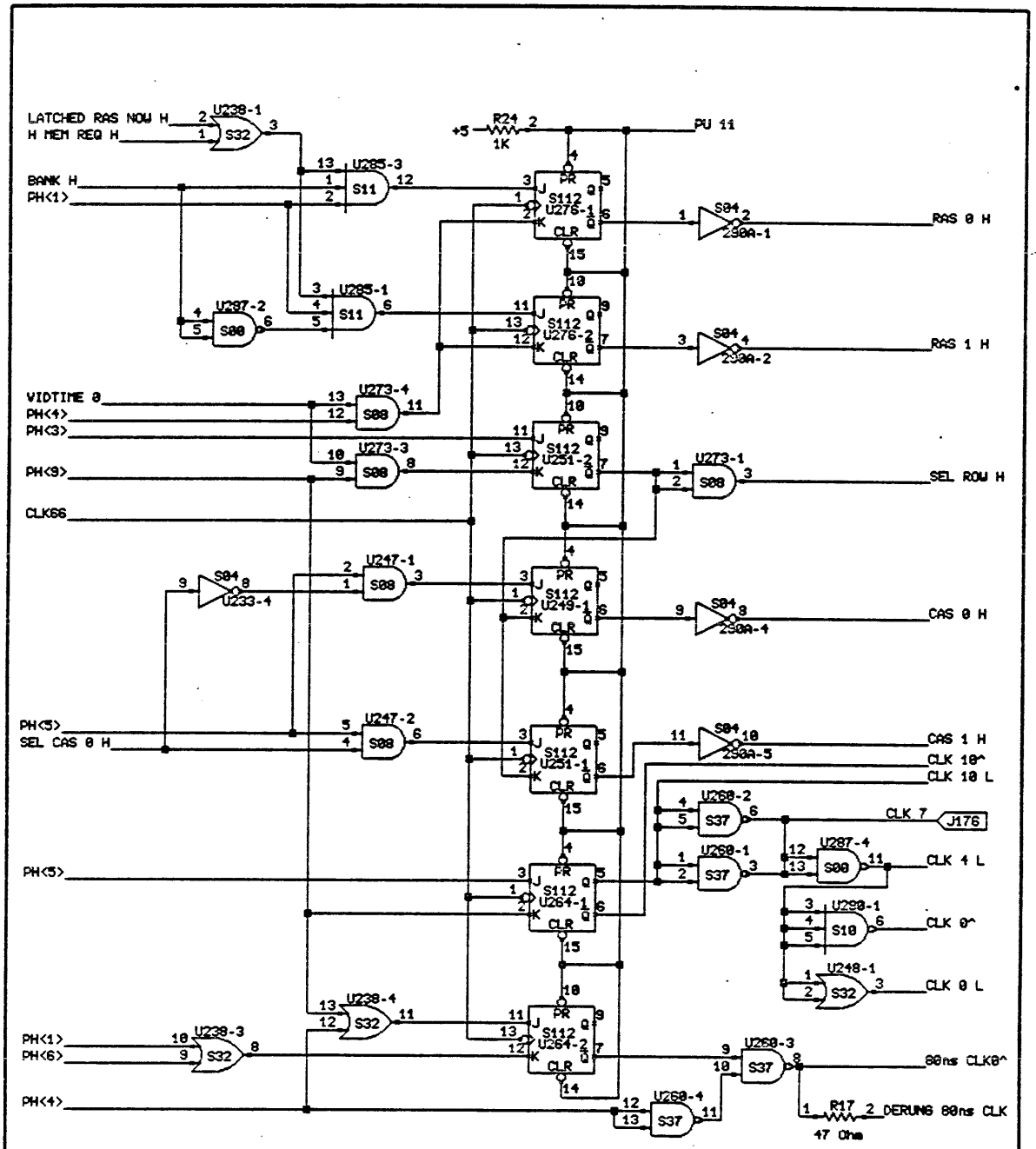

COPYRIGHT (c) 1984

THIS DOCUMENT IS NOT TO BE REPRODUCED IN ANY FORM OR TRANSMITTED IN WHOLE OR IN PART, WITHOUT PRIOR WRITTEN AUTHORIZATION OF PERQ SYSTEMS CORPORATION.

TITLE: CLOCK GENERATION

LMEM21

PERQ

DESIGNED	RUSS SCHWER	
DRAWN	27 DEC 84	STECK
UPDATED		

SIZE	CODE	IDENTIFICATION	VAR	REV
A	11	0245-	02	A

PROJ : 2 MEGABYE LANDSCAPE MEMORY w/256k

HI (0)	RES (1)	VERT ST	ADR	SEL	FUNCTION
			0	0	N C
0	0	BLANK	0	1	ENAB CUR ADR L
0	1	SHOW	1	0	ENAB DISPL ADR L
1	0	VERT	1	1	ENAB PROC ADR L
1	1	ILL			

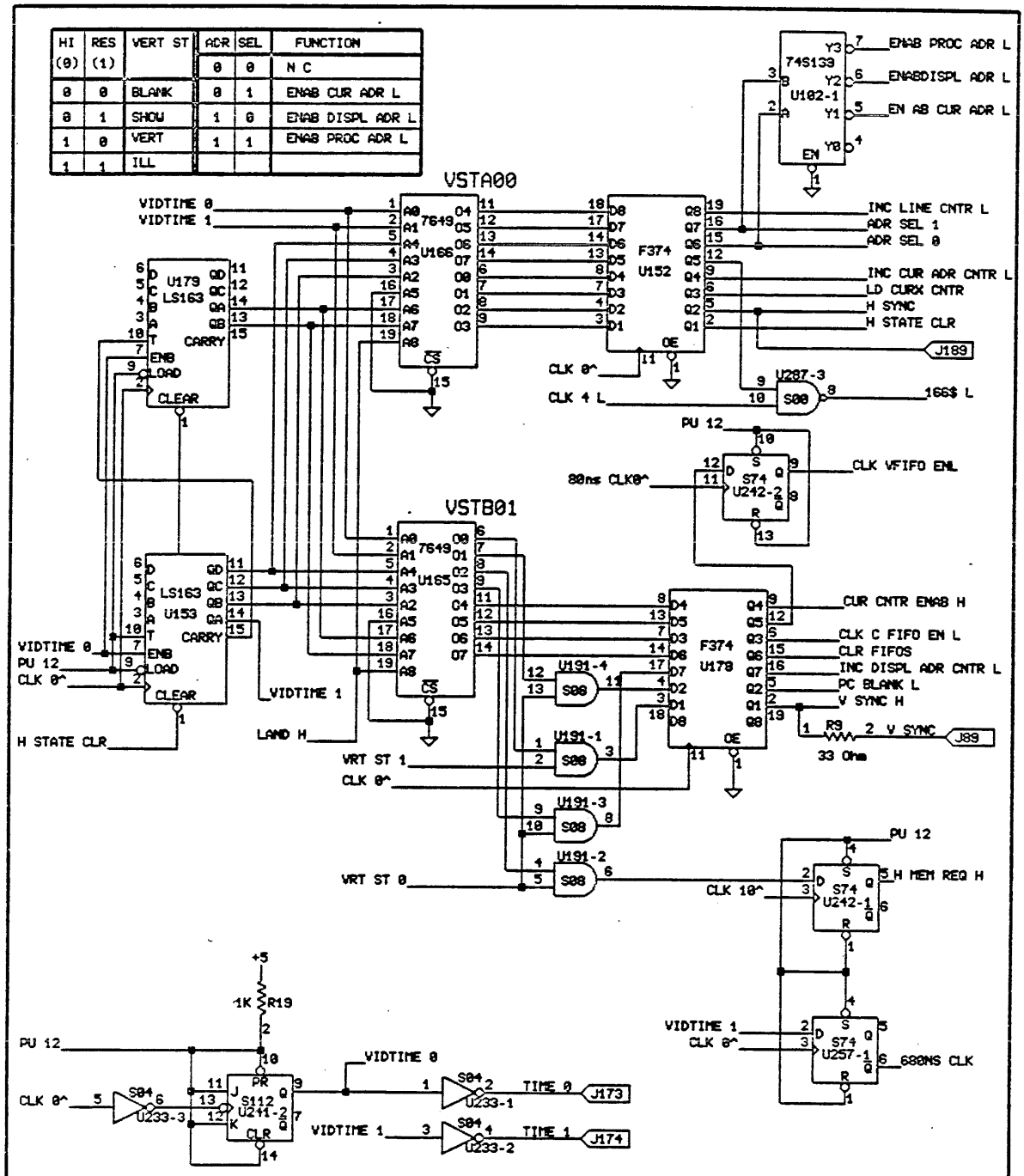

COPYRIGHT (c) 1984

THIS DOCUMENT IS NOT TO BE REPRODUCED IN ANY FORM OR TRANSMITTED IN WHOLE OR IN PART, WITHOUT PRIOR WRITTEN AUTHORIZATION OF PERQ SYSTEMS CORPORATION.

TITLE: HORIZONTAL STATE

LMEM22

PERQ

DESIGNED	RUSS SCHWER	
DRAWN	27 DEC 84	STECK
UPDATED		

SIZE	CODE	IDENTIFICATION	VAR	REV
A	11	0245-	02	A

PROJ : 2 MEGABYTE LANDSCAPE MEMORY U/256k

PAGE 22 OF 27

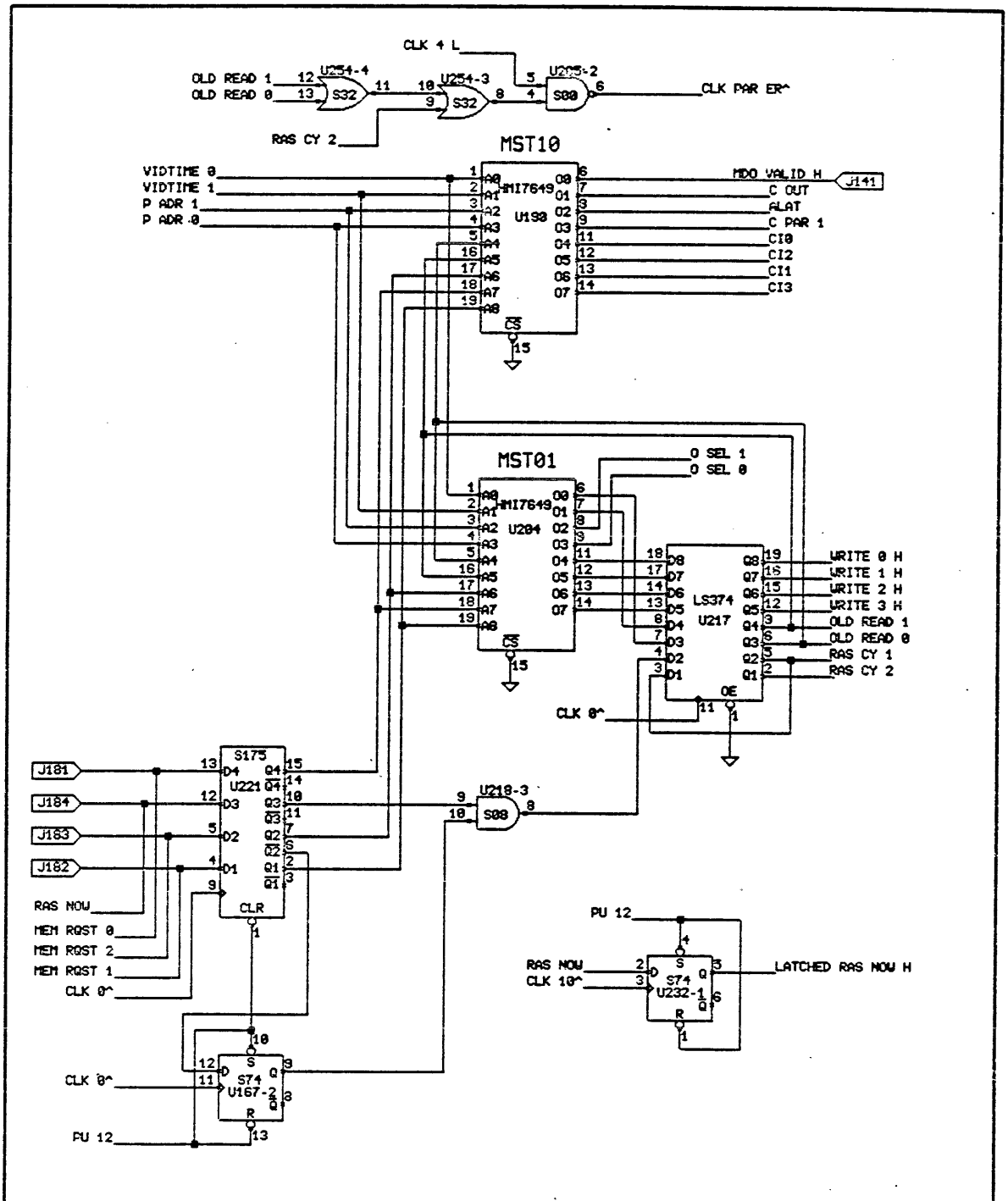

COPYRIGHT (c) 1984

THIS DOCUMENT IS NOT TO BE REPRODUCED IN ANY FORM OR TRANSMITTED IN WHOLE OR IN PART, WITHOUT PRIOR WRITTEN AUTHORIZATION OF PERQ SYSTEMS CORPORATION.

TITLE: MEMORY STATE

LMEM23

PERQ

DESIGNED	RUSS SCHWER		SIZE	CODE	IDENTIFICATION	VAR	REV
DRAWN	27 DEC 84	STECK	A	11	0245-	02	A
UPDATED			PROJ : 2 MEGABYTE LANDSCAPE MEMORY w/256k			PAGE 23 OF 27	

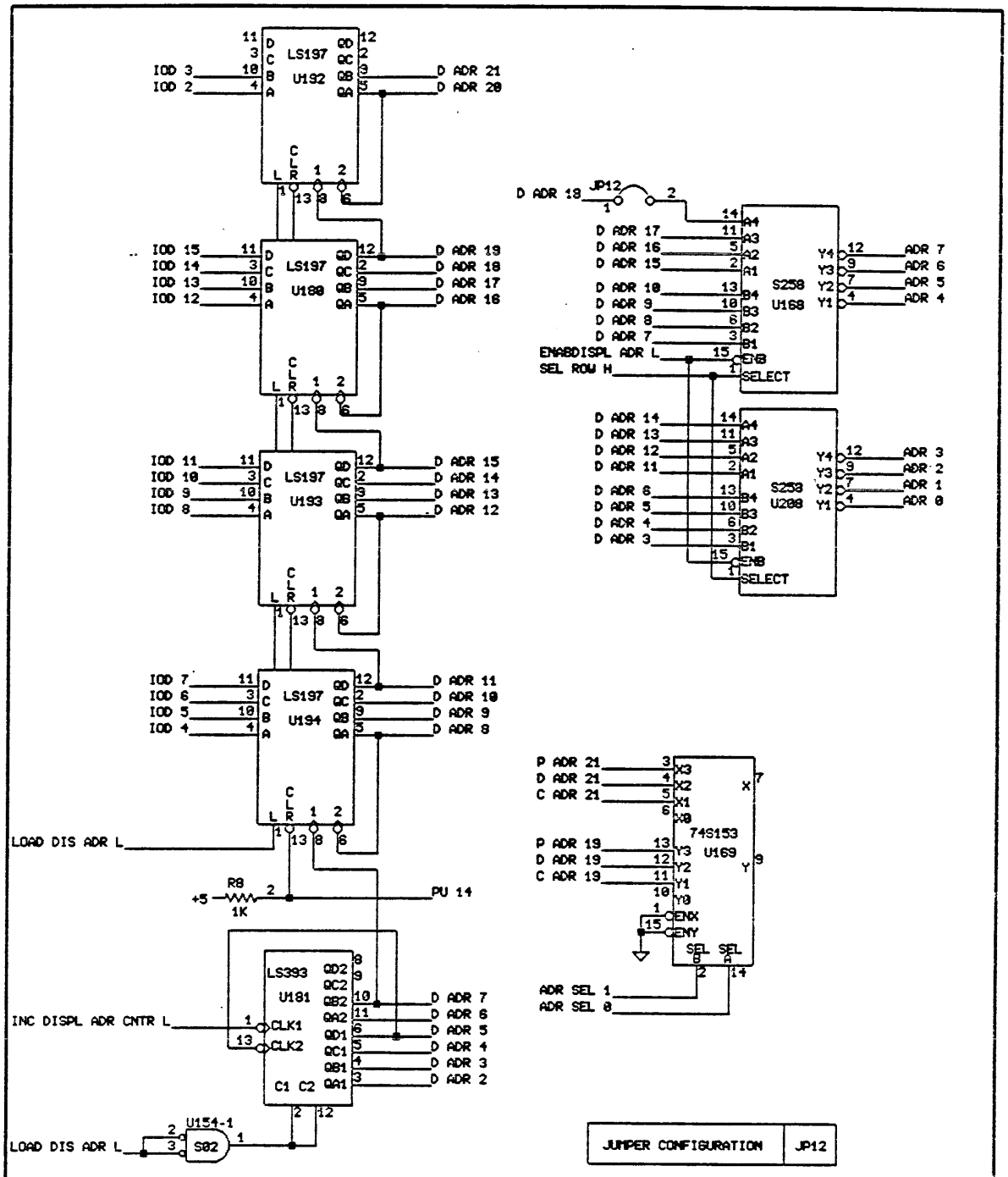

COPYRIGHT (c) 1984

THIS DOCUMENT IS NOT TO BE REPRODUCED IN ANY FORM OR TRANSMITTED IN WHOLE OR IN PART, WITHOUT PRIOR WRITTEN AUTHORIZATION OF PERQ SYSTEMS CORPORATION.

PERQ	TITLE	DISPLAY ADDRESS COUNTERS AND MUX				LMEM24	
	DESIGNED	RUSS SCHUER		SIZE	CODE	IDENTIFICATION	VAR	REV
	DRAWN	27 DEC 84	STECK	A	11	0245-	02	A
	UPDATED			PROJ :	2 MEGABYTE LANDSCAPE MEMORY w/256k		PAGE 24 OF 27	

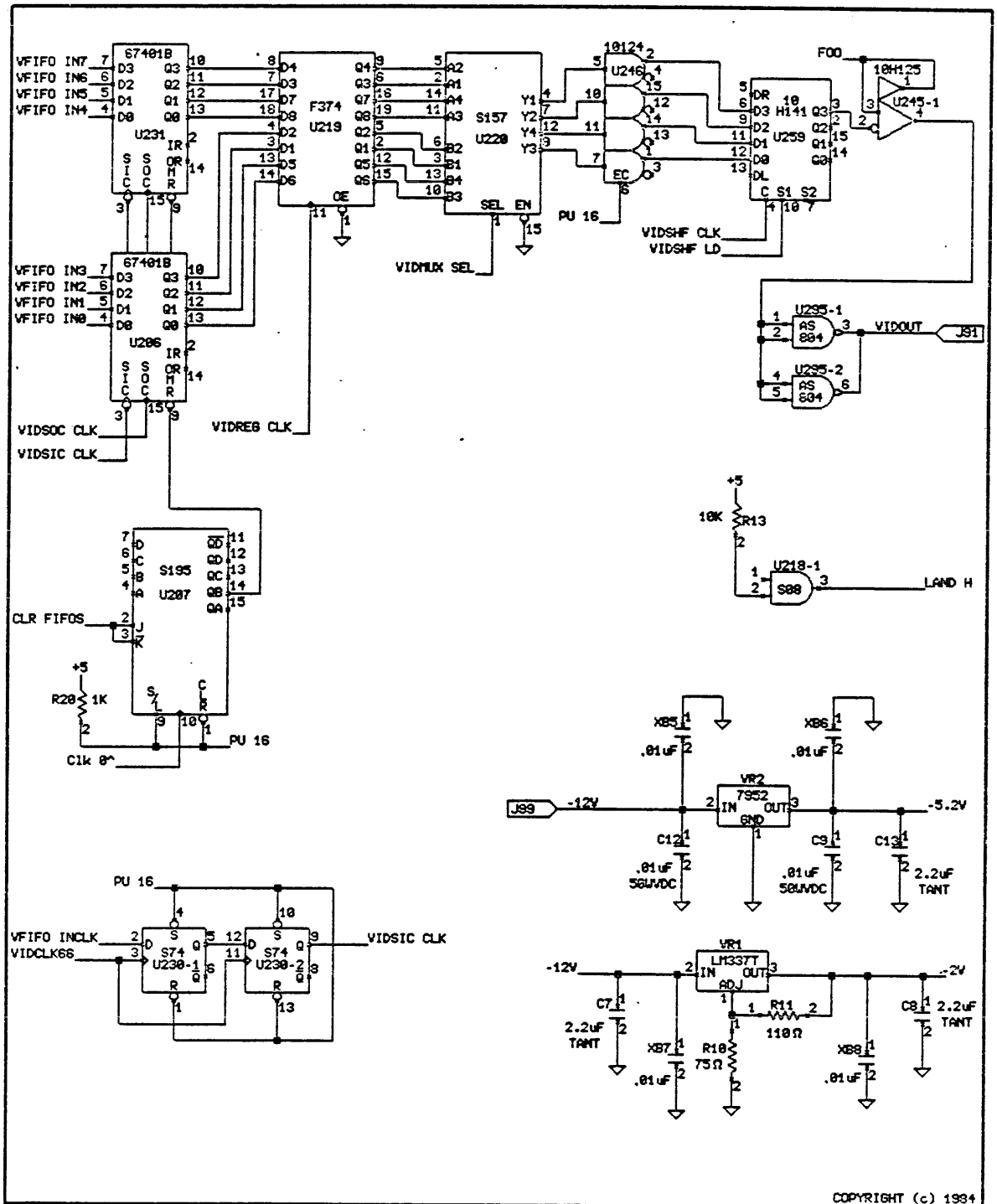

COPYRIGHT (c) 1984

THIS DOCUMENT IS NOT TO BE REPRODUCED IN ANY FORM OR TRANSMITTED IN WHOLE OR IN PART, WITHOUT PRIOR WRITTEN AUTHORIZATION OF PERQ SYSTEMS CORPORATION.

TITLE: VIDEO OUT DATA PATH - -5.2V and -2V REGULATORS

LMEM25

PERQ

DESIGNED	RUSS SCHUER		
DRAWN	27 DEC 84	STECK	
UPDATED			

SIZE	CODE	IDENTIFICATION	VAR	REV
A	11	0245-	02	A

PROJ : 2 MEGABYTE LANDSCAPE MEMORY w/256k

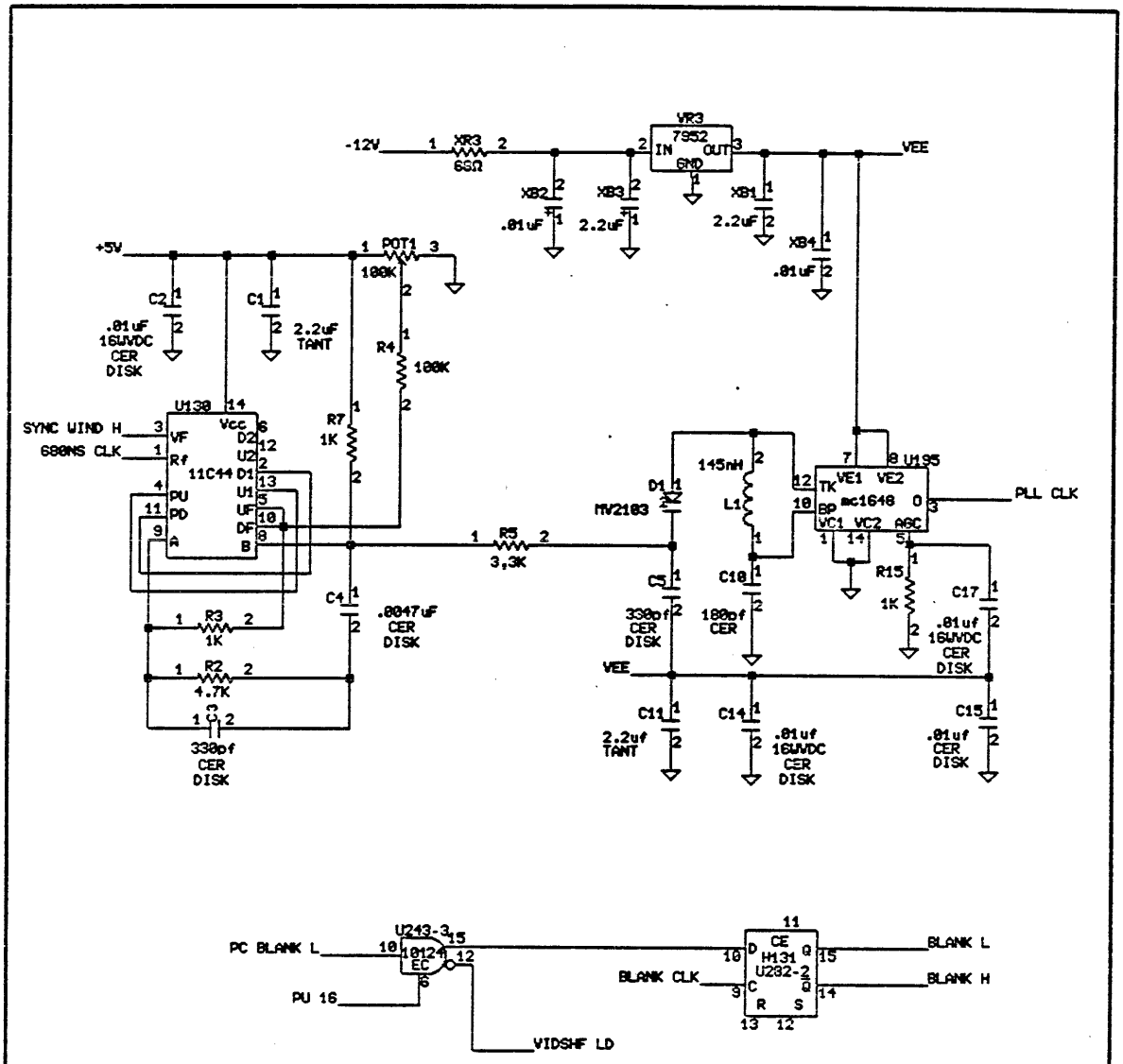

COPYRIGHT (c) 1984

THIS DOCUMENT IS NOT TO BE REPRODUCED IN ANY FORM OR TRANSMITTED IN WHOLE OR IN PART, WITHOUT PRIOR WRITTEN AUTHORIZATION OF PERQ SYSTEMS CORPORATION.

TITLE	PHASE LOCK LOOP - VCO AND PHASE COMPARATOR					LMEM26	
PERQ	DESIGNED	RUSS SCHWER		SIZE	CODE	IDENTIFICATION	VAR	REV
	DRAWN	27 DEC 84	STECK	A	11	0245-	02	D
	UPDATED	16 Jan 85	STECK	PROJ :	2 MEGABYTE LANDSCAPE MEMORY w/256k		PAGE 26 OF 27	

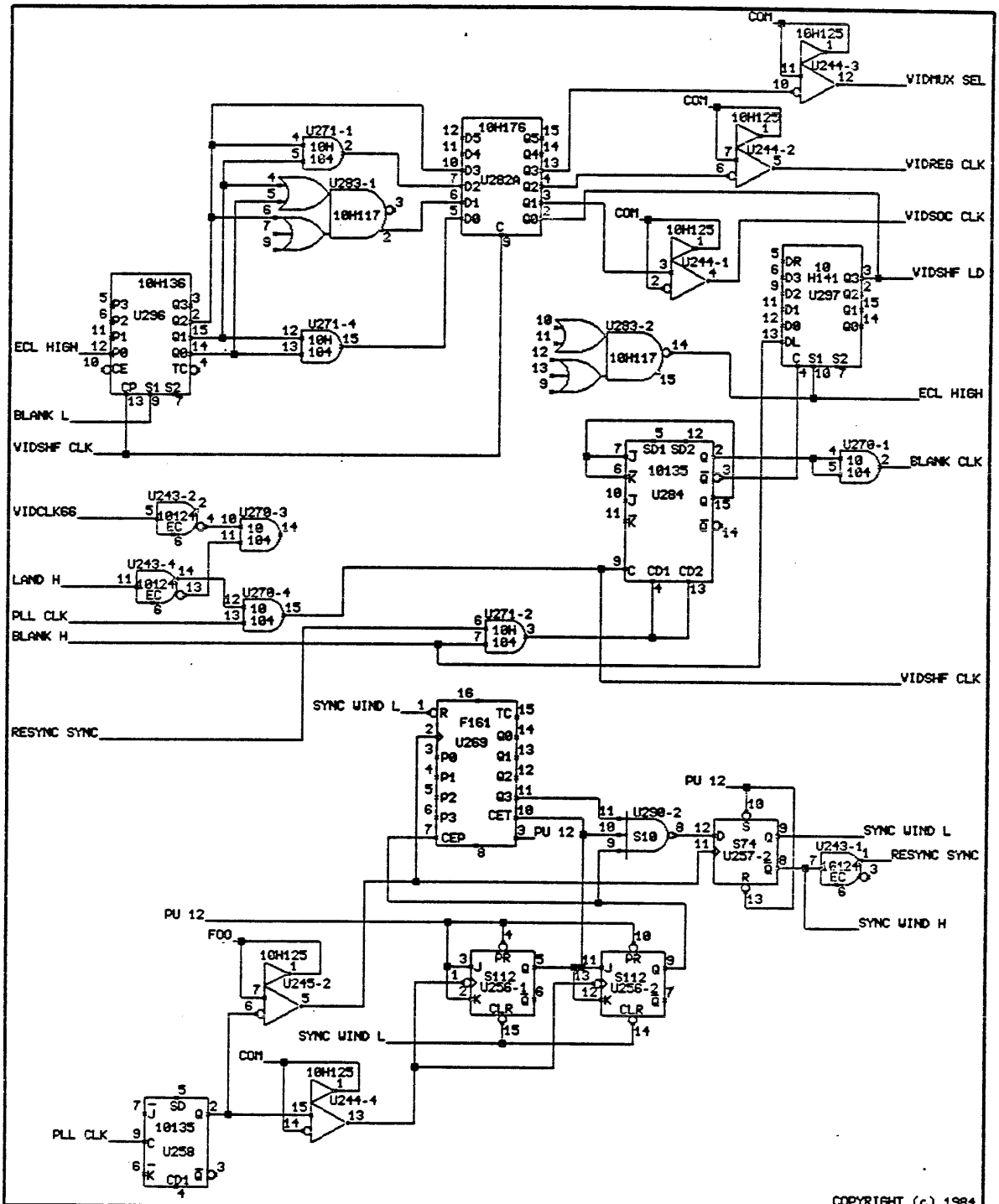

COPYRIGHT (c) 1984

THIS DOCUMENT IS NOT TO BE REPRODUCED IN ANY FORM OR TRANSMITTED IN WHOLE OR IN PART, WITHOUT PRIOR WRITTEN AUTHORIZATION OF PERQ SYSTEMS CORPORATION.

TITLE: VIDEO CLOCK SYNC AND VIDEO OUT CONTROL

LMEM27

PERQ

DESIGNED	RUSS SCHWER	
DRAWN	27 DEC 84	STECK
UPDATED	16 Jan 85	STECK

SIZE	CODE	IDENTIFICATION	VAR	REV
A	11	0245-	02	E

PROJ : 2 MEGABYTE LANDSCAPE MEMORY w/256k

Part/Page Cross Reference 16 Jan 85 17:59:42

Using Files: LMEM01.WL to LMEM27.WL

PART	TYPE	Pages Numbers
U1	MEMCHIP	14
U3	MEMCHIP	15
U5	MEMCHIP	16
U7	MEMCHIP	17
U9	74S374	3
U10	74S374	2
U11	74S74	1 1
U12	74S51	4 1
U13	74S280	1
U14	MEMCHIP	14
U16	MEMCHIP	15
U18	MEMCHIP	16
U20	MEMCHIP	17
U22	74S374	2
U23	74S374	3
U24	74S08	1 1 1 1
U25	74S280	1
U26	74S241	2
U27	MEMCHIP	14
U29	MEMCHIP	15
U31	MEMCHIP	16
U33	MEMCHIP	17
U35	74S374	2
U36	74S374	2
U37	74S74	1 1
U38	74S74	19
U39	74S241	2
U40	MEMCHIP	14
U42	MEMCHIP	15
U44	MEMCHIP	16
U46	MEMCHIP	17
U48	74S374	3
U49	74F374	5
U50	74F374	5
U51	74S280	4
U52	74S280	4
U53	MEMCHIP	14
U55	MEMCHIP	15
U57	MEMCHIP	16
U59	MEMCHIP	17
U61	74S374	3
U62	74F374	5
U63	74S374	19
U64	74S374	11
U65	MEMCHIP	14

U67...MEMCHIP.....15
U69...MEMCHIP.....16
U71...MEMCHIP.....17
U73...74S175..... 4
U74...74F374..... 5
U75...74S00..... 3 3 2 2
U76...74S374.....19
U77...74S374.....11
U78...MEMCHIP.....14
U80...MEMCHIP.....15
U82...MEMCHIP.....16
U84...MEMCHIP.....17
U86...74S258.....11
U87...74S153..... 4
U88...74S153.....12
U89...74S374.....19
U90...74S374.....11
U91...MEMCHIP.....14
U93...MEMCHIP.....15
U95...MEMCHIP.....16
U97...MEMCHIP.....17
U99...74S258.....11
U100..74F374..... 6
U101..74LS163.....18
U102..74S139.....22 4
U103..74S197.....18
U104..MEMCHIP.....14
U106..MEMCHIP.....15
U108..MEMCHIP.....16
U110..MEMCHIP.....17
U112..74F374..... 6
U113..74F374..... 6
U114..74LS393.....12
U115..74S151.....11
U116..74LS374.....18
U117..MEMCHIP.....14
U119..MEMCHIP.....15
U121..MEMCHIP.....16
U123..MEMCHIP.....17
U125..74S258.....12
U126..74F374..... 6
U127..74LS163.....18
U128..74LS197.....12
U129..74S197.....18
U130..11C44.....26
U131..MEMCHIP.....14
U133..MEMCHIP.....15
U135..MEMCHIP.....16
U137..MEMCHIP.....17
U139..74S10.....19 19
U140..74LS174.....18
U141..74S258.....12

U142..AM29821.....12
U143..74S138.....19
U144..MEMCHIP.....14
U146..MEMCHIP.....15
U148..MEMCHIP.....16
U150..MEMCHIP.....17
U152..74F374.....22
U153..74LS163.....22
U154..74S02.....24 19 12 4
U155..74LS374.....18
U156..74LS240.....19
U157..MEMCHIP.....14
U159..MEMCHIP.....15
U161..MEMCHIP.....16
U163..MEMCHIP.....17
U165..7649.....22
U166..7649.....22
U167..74S74.....23 18
U168..74S258.....24
U169..74S153.....24
U170..MEMCHIP.....14
U172..MEMCHIP.....15
U174..MEMCHIP.....16
U176..MEMCHIP.....17
U178..74F374.....22
U179..74LS163.....22
U180..74LS197.....24
U181..74LS393.....24
U182..MEMCHIP.....14
U184..MEMCHIP.....15
U186..MEMCHIP.....16
U188..MEMCHIP.....17
U190..7649.....23
U191..74S08.....22 22 22 22
U192..74LS197.....24
U193..74LS197.....24
U194..74LS197.....24
U195..MC1648.....26
U196..MEMCHIP.....14
U198..MEMCHIP.....15
U200..MEMCHIP.....16
U202..MEMCHIP.....17
U204..7649.....23
U205..74S00.....23 19 18 11
U206..67401B.....25
U207..74S195.....25
U208..74S258.....24
U209..MEMCHIP.....14
U211..MEMCHIP.....15
U213..MEMCHIP.....16
U215..MEMCHIP.....17
U217..74LS374.....23

U218..74S08.....25 23
U219..74F374.....25
U220..74S157.....25
U221..74S175.....23
U222..AM2965/1.....13 13 13
U223..AM2965/1.....13 13
U224..AM2965/1.....13 13
U225..AM2965/1.....13 13 13
U227..AM2965/1.....13 13 13 13 13 13
U228..AM2965/1.....13
U229..AM2965/1.....13 13 13
U230..74S74.....25 25
U231..67401B.....25
U232..74S74.....23
U233..74S04.....22 22 22 21
U234..AM2965/1.....13
U238..74S32.....21 21 21
U239..AM2965/1.....13 13 13 13 13 13 13 13
U241..74S112.....22
U242..74S74.....22 22
U243..10124/1.....27 27 27 26
U244..10H125/1.....27 27 27 27
U245..10H125/1.....27 25
U246..10124.....25
U247..74S08.....21 21
U248..74S32.....21 19 18 18
U249..74S112.....21
U250..74S112.....20 20
U251..74S112.....21 21
U252..74S225.....10
U253..74F374..... 9
U254..74S32.....23 23 10 9
U255..74LS166..... 7
U256..74S112.....27 27
U257..74S74.....27 22
U258..10135/1.....27
U259..10H141.....25
U260..74S37.....21 21 21 21
U261..74S112.....20 20
U262..74S112.....20 20
U263..74S112.....20 20
U264..74S112.....21 21
U265..74F374.....10
U266..7643..... 9
U267..74LS166..... 8
U268..74LS166..... 7
U269..74F161.....27
U270..10104/1.....27 27 27
U271..10H104/1.....27 27 27
U273..74S08.....21 21 21
U274..74S112.....20 20
U275..74S112.....20 20

U276..74S112.....21 21
U277..74S225.....10
U278..7643..... 9
U279..74LS166..... 8
U280..74LS166..... 7
U281..74LS166..... 7
U282..10H131.....26
U283..10H117.....27 27
U284..10135.....27
U285..74S11.....21 21 20
U286..74S30.....20
U287..74S00.....22 21 21 20
U288..74AS804.....20 20 20
U289..K1100.....20
U290..74S10.....27 21
U291..7643..... 9
U292..74F374..... 9
U293..74LS166..... 8
U294..74LS166..... 8
U295..74AS804.....25 25
U296..10H136.....27
U297..10H141.....27
282A..10H176.....27
290A..74S04.....21 21 21 21
C1....CAP.....26
C2....CAP.....26
C3....CAP.....26
C4....CAP.....26
C5....CAP.....26
C7....CAP.....25
C8....CAP.....25
C9....CAP.....25
C10...CAP.....26
C11...CAP.....26
C12...CAP.....25
C13...CAP.....25
C14...CAP.....26
C15...CAP.....26
C17...CAP.....26
D1....VARACTOR.....26
L1....COIL.....26
POT1..POT.....26
R1....RES+5..... 1
R2....RES.....26
R3....RES.....26
R4....RES.....26
R5....RES.....26
R6....RES+5.....18
R7....RES.....26
R8....RES+5.....24
R9....RES.....22
R10...RES.....25

R11...RES.....25
R12...RES+5..... 2
R13...RES+5.....25
R15...RES.....26
R17...RES.....21
R19...RES+5.....22
R20...RES+5.....25
R21...RES+5.....19
R22...RES+5.....20
R23...RES+5.....20
R24...RES+5.....21
R25...RES+5.....12
THM1..THERMISTER.....19
VR1...LM337T.....25
VR2...7952.....25
VR3...7952.....26
XB1...CAP.....26
XB2...CAP.....26
XB3...CAP.....26
XB4...CAP.....26
XB5...CAP.....25
XB6...CAP.....25
XB7...CAP.....25
XB8...CAP.....25
XC1...CAP.....20
XC2...CAP.....20
XC3...CAP.....20
XD1...DIODE.....20
XD2...DIODE.....20
XL1...COIL.....20
XR3...RES.....26
J6....EDGE..... 2
J7....EDGE..... 2
J8....EDGE..... 2
J9....EDGE..... 2
J11...EDGE..... 2
J12...EDGE..... 2
J13...EDGE..... 2
J14...EDGE..... 2
J16...EDGE..... 6
J17...EDGE..... 6
J18...EDGE..... 6
J19...EDGE..... 6
J21...EDGE..... 6
J22...EDGE..... 6
J23...EDGE..... 6
J24...EDGE..... 6
J26...EDGE.....11
J27...EDGE.....11
J28...EDGE.....11
J29...EDGE.....11
J31...EDGE.....11

J32...EDGE.....11
J33...EDGE.....11
J34...EDGE.....11
J36...EDGE.....11
J37...EDGE.....11
J38...EDGE.....11
J56...EDGE.....19
J57...EDGE.....19
J58...EDGE.....19
J59...EDGE.....19
J61...EDGE.....19
J62...EDGE.....19
J63...EDGE.....19
J64...EDGE.....19
J66...EDGE.....19
J67...EDGE.....19
J68...EDGE.....19
J69...EDGE.....19
J71...EDGE.....19
J78...EDGE.....19
J79...EDGE.....19
J83...EDGE.....19
J84...EDGE.....18
J89...EDGE.....22
J91...EDGE.....25
J99...EDGE.....25
J106..EDGE..... 2
J107..EDGE..... 2
J108..EDGE..... 2
J109..EDGE..... 2
J111..EDGE..... 2
J112..EDGE..... 2
J113..EDGE..... 2
J114..EDGE..... 2
J116..EDGE..... 6
J117..EDGE..... 6
J118..EDGE..... 6
J119..EDGE..... 6
J121..EDGE..... 6
J122..EDGE..... 6
J123..EDGE..... 6
J124..EDGE..... 6
J126..EDGE.....11
J127..EDGE.....11
J128..EDGE.....11
J129..EDGE.....11
J131..EDGE.....11
J132..EDGE.....11
J133..EDGE.....11
J134..EDGE.....11
J136..EDGE.....11
J137..EDGE.....11

J138..EDGE.....11
J141..EDGE.....23
J156..EDGE.....19
J157..EDGE.....19
J158..EDGE.....19
J159..EDGE.....19
J161..EDGE.....19
J162..EDGE.....19
J163..EDGE.....19
J164..EDGE.....19
J167..EDGE.....19
J168..EDGE.....19
J169..EDGE.....19
J173..EDGE.....22
J174..EDGE.....22
J176..EDGE.....21
J181..EDGE.....23
J182..EDGE.....23
J183..EDGE.....23
J184..EDGE.....23
J186..EDGE.....19
J189..EDGE.....22
JP2...JUMPER.....11
JP3...JUMPER.....11
JP4...JUMPER.....11
JP5...JUMPER.....11
JP7...JUMPER.....11
JP8...JUMPER.....12
JP9...JUMPER.....11
JP10..JUMPER.....11
JP12..JUMPER.....24

Signal/Page Cross Reference 16 Jan 85 17:59:42

Using Files: LMEM01.WL to LMEM27.WL

SIGNAL NAME.....Pages Numbers

+5V.....26
-12V.....26 25
-2V.....25
-5.2V.....25
166$ L.....22 8 7
680NS CLK.....26 22
80ns CLK0^.....22 21 18 10 9
ADR 0.....24 13 12 11
ADR 1.....24 13 12 11
ADR 2.....24 13 12 11
ADR 3.....24 13 12 11
ADR 4.....24 13 12 11
ADR 5.....24 13 12 11
ADR 6.....24 13 12 11
ADR 7.....24 13 12 11
ADR 8.....13 11
ADR SEL 0.....24 22 12 11
ADR SEL 1.....24 22 12 11
ALAT.....23 11
BANK H.....21 12
BLANK CLK.....27 26
BLANK H.....27 26
BLANK L.....27 26
BUF MDI 00..... 3 2
BUF MDI 01..... 3 2
BUF MDI 02..... 3 2
BUF MDI 03..... 3 2
BUF MDI 04..... 3 2
BUF MDI 05..... 3 2
BUF MDI 06..... 3 2
BUF MDI 07..... 3 2
BUF MDI 08..... 3 2
BUF MDI 09..... 3 2
BUF MDI 10..... 3 2
BUF MDI 11..... 3 2
BUF MDI 12..... 3 2
BUF MDI 13..... 3 2
BUF MDI 14..... 3 2
BUF MDI 15..... 3 2
C ADR 10.....12
C ADR 11.....12
C ADR 12.....12
C ADR 13.....12
C ADR 14.....12
C ADR 15.....12

C ADR 16.....12
C ADR 17.....12
C ADR 18.....12
C ADR 19.....24 12 11
C ADR 2.....12 11
C ADR 20.....12 11
C ADR 21.....24 12
C ADR 3.....12
C ADR 4.....12
C ADR 5.....12
C ADR 6.....12
C ADR 7.....12
C ADR 8.....12
C ADR 9.....12
C OUT.....23 4
C PAR 1.....23 19
CAS 0 H.....21 13
CAS 1 H.....21 13
CI0.....23 2
CI1.....23 2
CI2.....23 3
CI3.....23 3
CIX 0..... 2 1
CIX 1..... 2 1
CIX 2..... 3 1
CIX 3..... 3 1
CLK 0 L.....21 3 2
CLK 0^.....23 22 21 19
CLK 10 L.....21 11
CLK 10^.....23 22 21 4
CLK 4 L.....23 22 21 19
CLK 7.....21
CLK C FIFO EN L.....22 10
CLK OUT X..... 6 5 4
CLK P ADR.....19
CLK PAR ER^.....23 19
CLK VFIFO ENL.....22 9
CLK66.....21 20 20
CLR FIFOS.....25 22 10
COM.....27
CRT SIGS ENB.....19
CUR CNTR ENAB H.....22 18
CUR DATA 0.....10 9
CUR DATA 1.....10 9
CUR DATA 2.....10 9
CUR DATA 3.....10 9
CUR DATA 4.....10 9
CUR DATA 5.....10 9
CUR DATA 6.....10 9
CUR DATA 7.....10 9
CUR ENB H.....18 9
CUR FIFO UNLD.....18 10

```
Clk 0^.................25
D ADR 10...............24
D ADR 11...............24
D ADR 12...............24
D ADR 13...............24
D ADR 14...............24
D ADR 15...............24
D ADR 16...............24
D ADR 17...............24
D ADR 18...............24
D ADR 19...............24 11
D ADR 2................24 12 11
D ADR 20...............24 11
D ADR 21...............24
D ADR 3................24
D ADR 4................24
D ADR 5................24
D ADR 6................24
D ADR 7................24
D ADR 8................24
D ADR 9................24
DERUNG 80ns CLK........21  8  7
DIV SYNC...............20
ECL HIGH...............27
EN AB CUR ADR L........22 12
ENAB PROC ADR L........22 11
ENABDISPL ADR L........24 22
EVEN A.................. 4
EVEN B.................. 4
FOO....................27 25
GND....................26 26 25 25 24 23 22 20 18 13 13 13 13 12 11 10  9
GND..................... 8  7  4  3  2  1
H MEM REQ H............22 21
H STATE CLR............22
H SYNC.................22 19
I/O B ENAB L...........19
INC CUR ADR CNTR L.....22 12
INC DISPL ADR CNTR ....24 22
INC LINE CNTR L........22 18
INTR EN L..............19 18
IOA 0..................19
IOA 1..................19
IOA 2..................19
IOA 3..................19
IOA 4..................19
IOA 5..................19
IOA 6..................19
IOD 0..................19 18
IOD 1..................19 18
IOD 10.................24 19 18 12
IOD 11.................24 19 18 12
IOD 12.................24 19 18 12
```

IOD 13.....24 19 18 12
IOD 14.....24 19 18 12
IOD 15.....24 19 18 12
IOD 2.....24 19 18 12
IOD 3.....24 19 18 12
IOD 4.....24 19 18 12
IOD 5.....24 19 18 12
IOD 6.....24 19 18 12
IOD 7.....24 19 18 12
IOD 8.....24 19 18 12
IOD 9.....24 19 18 12
LAND H.....27 25 22 19
LATCHED RAS NOW H.....23 21
LD CUR ADR CNT L.....19 12
LD CURX CNTR.....22 18
LINE CNT INT L.....18
LINE CNT OVERFLOW L....19 18
LOAD CURSOR X POS.....19 18
LOAD DIS ADR L.....24 19
LOAD LINE CNTR L.....19 18
LOAD VIDEO STATE.....19 18
LOOPTHRU.....19
MADR 0.....11
MADR 1.....11
MADR 10.....11
MADR 11.....11
MADR 12.....11
MADR 13.....11
MADR 14.....11
MADR 15.....11
MADR 16.....11
MADR 17.....11
MADR 18.....11
MADR 19.....11
MADR 2.....11
MADR 20.....11
MADR 21.....11
MADR 3.....11
MADR 4.....11
MADR 5.....11
MADR 6.....11
MADR 7.....11
MADR 8.....11
MADR 9.....11
MAP 0.....18 9
MAP 1.....18 9
MAP 2.....18 9
MAP OUT 0..... 9
MAP OUT 1..... 9
MAP OUT 2..... 9
MAP OUT 3..... 9
MAP OUT 4..... 9

```
MAP OUT 5..... 9
MAP OUT 6..... 9
MAP OUT 7..... 9
MDI 00..... 2  1
MDI 01..... 2  1
MDI 02..... 2  1
MDI 03..... 2  1
MDI 04..... 2  1
MDI 05..... 2  1
MDI 06..... 2  1
MDI 07..... 2  1
MDI 08..... 2  1
MDI 09..... 2  1
MDI 10..... 2  1
MDI 11..... 2  1
MDI 12..... 2  1
MDI 13..... 2  1
MDI 14..... 2  1
MDI 15..... 2  1
MDO 0..... 6  5  4
MDO 1..... 6  5  4
MDO 10..... 6  5  4
MDO 11..... 6  5  4
MDO 12..... 6  5  4
MDO 13..... 6  5  4
MDO 14..... 6  5  4
MDO 15..... 6  5  4
MDO 2..... 6  5  4
MDO 3..... 6  5  4
MDO 4..... 6  5  4
MDO 5..... 6  5  4
MDO 6..... 6  5  4
MDO 7..... 6  5  4
MDO 8..... 6  5  4
MDO 9..... 6  5  4
MDO VALID H.....23
MEM RQST 0.....23
MEM RQST 1.....23
MEM RQST 2.....23
MEMSHIFT 0..... 9  8
MEMSHIFT 1..... 9  8
MEMSHIFT 2..... 9  8
MEMSHIFT 3..... 9  8
MEMSHIFT 4..... 9  7
MEMSHIFT 5..... 9  7
MEMSHIFT 6..... 9  7
MEMSHIFT 7..... 9  7
MSP0.....10  9
MSP1.....10  9
MSP2.....10  9
MSP3.....10  9
MSP4.....10  9
```

MSP5.....10 9
MSP6.....10 9
MSP7.....10 9
O SEL 0.....23 4
O SEL 1.....23 4
ODD A..... 4
ODD B..... 4
OLD READ 0.....23
OLD READ 1.....23
OUT ENAB W0..... 5 4
OUT ENAB W1..... 5 4
OUT ENAB W2..... 6 4
OUT ENAB W3..... 6 4
P ADR 0.....23 11
P ADR 1.....23 11
P ADR 10.....19 11
P ADR 11.....19 11
P ADR 12.....19 11
P ADR 13.....19 11
P ADR 14.....19 11
P ADR 15.....19 11
P ADR 16.....19 11
P ADR 17.....19 11
P ADR 18.....19 11
P ADR 19.....24 19 11
P ADR 2.....19 12 11
P ADR 20.....19 11
P ADR 21.....24 19 11
P ADR 3.....19 11
P ADR 4.....19 11
P ADR 5.....19 11
P ADR 6.....19 11
P ADR 7.....19 11
P ADR 8.....19 11
P ADR 9.....19 11
PAR ER H.....19 4
PAR INTR L.....19
PC BLANK L.....26 22
PH<0>.....20
PH<1>.....21 20
PH<2>.....20
PH<3>.....21 20
PH<4>.....21 20
PH<5>.....21 20
PH<6>.....21 20
PH<7>.....20
PH<8>.....20
PH<9>.....21 20
PLL CLK.....27 26
PU 1..... 1
PU 10.....20 20
PU 11.....21 21

```
PU 12.....................27 23 22 22 18
PU 14.....................24
PU 16.....................26 25
PU 2..................... 8  7  4  2
PU 5......................18 12
PU 9......................20 20
RAS 0 H...................21 13
RAS 1 H...................21
RAS CY 1..................23
RAS CY 2..................23
RAS NOW...................23
READ HI PAR L.............19
READ LO PAR L.............19
RESYNC SYNC...............27
SEL CAS 0 H...............21
SEL ROW H.................24 21 12 11
SYNC WIND H...............27 26
SYNC WIND L...............27
TEMP CAGE.................19
TIME 0....................22
TIME 1....................22
V SYNC....................22
V SYNC H..................22 19
VEE.......................26
VFIFO IN0.................25  9
VFIFO IN1.................25  9
VFIFO IN2.................25  9
VFIFO IN3.................25  9
VFIFO IN4.................25  9
VFIFO IN5.................25  9
VFIFO IN6.................25  9
VFIFO IN7.................25  9
VFIFO INCLK...............25  9
VIDCLK66..................27 25 20
VIDMUX SEL................27 25
VIDOUT....................25
VIDREG CLK................27 25
VIDSHF CLK................27 25
VIDSHF LD.................27 26 25
VIDSIC CLK................25
VIDSOC CLK................27 25
VIDTIME 0.................23 22 21
VIDTIME 1.................23 22
VRT ST 0..................22 18
VRT ST 1..................22 18
WO A0 A L.................15 15 14 14 13
WO A1 A L.................15 15 14 14 13
WO A2 A L.................15 15 14 14 13
WO A3 A L.................15 15 14 14 13
WO A4 A L.................15 15 14 14 13
WO A5 A L.................15 15 14 14 13
WO A6 A L.................15 15 14 14 13
```

```
W0 A7 A L.............15 15 14 14 13
W0 A8 A L.............15 15 14 14 13
W0 CAS 0A L...........13
W0 IN<0>..............14  2
W0 IN<10>.............14  2
W0 IN<11>.............14  2
W0 IN<12>.............14  2
W0 IN<13>.............14  2
W0 IN<14>.............14  2
W0 IN<15>.............14  2
W0 IN<1>..............14  2
W0 IN<2>..............14  2
W0 IN<3>..............14  2
W0 IN<4>..............14  2
W0 IN<5>..............14  2
W0 IN<6>..............14  2
W0 IN<7>..............14  2
W0 IN<8>..............14  2
W0 IN<9>..............14  2
W0 OUT<0>.............14  8  5
W0 OUT<10>............14  8  5
W0 OUT<11>............14  8  5
W0 OUT<12>............14  7  5
W0 OUT<13>............14  7  5
W0 OUT<14>............14  7  5
W0 OUT<15>............14  7  5
W0 OUT<1>.............14  8  5
W0 OUT<2>.............14  8  5
W0 OUT<3>.............14  8  5
W0 OUT<4>.............14  7  5
W0 OUT<5>.............14  7  5
W0 OUT<6>.............14  7  5
W0 OUT<7>.............14  7  5
W0 OUT<8>.............14  8  5
W0 OUT<9>.............14  8  5
W0 PAR IN.............14  1
W0 PAR OUT............14  4
W0 WRITE A L..........14 14 13
W1 CAS 0A L...........15 15 14 14 13
W1 CAS 1A L...........15 15 14 14 13
W1 IN<0>..............15  2
W1 IN<10>.............15  2
W1 IN<11>.............15  2
W1 IN<12>.............15  2
W1 IN<13>.............15  2
W1 IN<14>.............15  2
W1 IN<15>.............15  2
W1 IN<1>..............15  2
W1 IN<2>..............15  2
W1 IN<3>..............15  2
W1 IN<4>..............15  2
W1 IN<5>..............15  2
```

```
W1 IN<6>.....15  2
W1 IN<7>.....15  2
W1 IN<8>.....15  2
W1 IN<9>.....15  2
W1 OUT<0>....15  8  5
W1 OUT<10>...15  8  5
W1 OUT<11>...15  8  5
W1 OUT<12>...15  7  5
W1 OUT<13>...15  7  5
W1 OUT<14>...15  7  5
W1 OUT<15>...15  7  5
W1 OUT<1>....15  8  5
W1 OUT<2>....15  8  5
W1 OUT<3>....15  8  5
W1 OUT<4>....15  7  5
W1 OUT<5>....15  7  5
W1 OUT<6>....15  7  5
W1 OUT<7>....15  7  5
W1 OUT<8>....15  8  5
W1 OUT<9>....15  8  5
W1 PAR IN....15  1
W1 PAR OUT...15  4
W1 RAS A L...15 15 15 15 14 14 14 14 13
W1 WRITE A L.15 15 13
W2 IN<0>.....16  3
W2 IN<10>....16  3
W2 IN<11>....16  3
W2 IN<12>....16  3
W2 IN<13>....16  3
W2 IN<14>....16  3
W2 IN<15>....16  3
W2 IN<1>.....16  3
W2 IN<2>.....16  3
W2 IN<3>.....16  3
W2 IN<4>.....16  3
W2 IN<5>.....16  3
W2 IN<6>.....16  3
W2 IN<7>.....16  3
W2 IN<8>.....16  3
W2 IN<9>.....16  3
W2 OUT<0>....16  8  6
W2 OUT<10>...16  8  6
W2 OUT<11>...16  8  6
W2 OUT<12>...16  7  6
W2 OUT<13>...16  7  6
W2 OUT<14>...16  7  6
W2 OUT<15>...16  7  6
W2 OUT<1>....16  8  6
W2 OUT<2>....16  8  6
W2 OUT<3>....16  8  6
W2 OUT<4>....16  7  6
W2 OUT<5>....16  7  6
```

```
W2 OUT<6>.............16  7  6
W2 OUT<7>.............16  7  6
W2 OUT<8>.............16  8  6
W2 OUT<9>.............16  8  6
W2 PAR IN.............16  1
W2 PAR OUT............16  4
W2 WRITE A L..........16 16 13
W3 A0 A L.............17 17 16 16 13
W3 A1 A L.............17 17 16 16 13
W3 A2 A L.............17 17 16 16 13
W3 A3 A L.............17 17 16 16 13
W3 A4 A L.............17 17 16 16 13
W3 A5 A L.............17 17 16 16 13
W3 A6 A L.............17 17 16 16 13
W3 A7 A L.............17 17 16 16 13
W3 A8 A L.............17 17 16 16 13
W3 CAS 0A L...........17 17 16 16 13
W3 CAS 1A L...........17 17 16 16 13
W3 IN<0>..............17  3
W3 IN<10>.............17  3
W3 IN<11>.............17  3
W3 IN<12>.............17  3
W3 IN<13>.............17  3
W3 IN<14>.............17  3
W3 IN<15>.............17  3
W3 IN<1>..............17  3
W3 IN<2>..............17  3
W3 IN<3>..............17  3
W3 IN<4>..............17  3
W3 IN<5>..............17  3
W3 IN<6>..............17  3
W3 IN<7>..............17  3
W3 IN<8>..............17  3
W3 IN<9>..............17  3
W3 OUT<0>.............17  8  6
W3 OUT<10>............17  8  6
W3 OUT<11>............17  8  6
W3 OUT<12>............17  7  6
W3 OUT<13>............17  7  6
W3 OUT<14>............17  7  6
W3 OUT<15>............17  7  6
W3 OUT<1>.............17  8  6
W3 OUT<2>.............17  8  6
W3 OUT<3>.............17  8  6
W3 OUT<4>.............17  7  6
W3 OUT<5>.............17  7  6
W3 OUT<6>.............17  7  6
W3 OUT<7>.............17  7  6
W3 OUT<8>.............17  8  6
W3 OUT<9>.............17  8  6
W3 PAR IN.............17  1
W3 PAR OUT............17  4
```

W3 RAS A L.....17 17 17 17 16 16 16 16 13
W3 WRITE A L.....17 17 13
WRITE 0 H.....23 13
WRITE 1 H.....23 13
WRITE 2 H.....23 13
WRITE 3 H.....23 13
WRITE BAD PARITY.....18 1

This Run Was made using the following files:

110245.PART
lmem27.WL
lmem26.WL
lmem25.WL
lmem24.WL
lmem23.WL
lmem22.WL
lmem21.WL
lmem20.WL
lmem19.WL
lmem18.WL
lmem17.WL
lmem16.WL
lmem15.WL
lmem14.WL
lmem13.WL
lmem12.WL
lmem11.WL
lmem10.WL
lmem09.WL
lmem08.WL
lmem07.WL
lmem06.WL
lmem05.WL
lmem04.WL
lmem03.WL
lmem02.WL
lmem01.WL

Number Of Nets = 721
Begin Wirelist

1: U13-1 U22-1 U35-1 U10-1 U36-1 U26-1
1: U39-1 U23-1 U61-1 U48-1 U9-1 U51-1
1: U102-15 U87-1 U87-15 U255-6 U280-6
1: U281-6 U268-6 U279-6 U267-6 U294-6
1: U293-6 U291-17 U291-5 U291-8 U266-8
1: U278-8 U291-10 U266-10 U278-10 U292-1
1: U253-1 U265-1 U252-9 U277-9 U115-7
1: U90-1 U64-1 U77-1 U88-1 U88-15 U142-1
1: U239-19 U239-1 U229-1 U227-19 U227-1
1: U228-19 U225-1 U225-19 U234-1 U222-1
1: U222-19 U223-1 U223-19 U224-19 U155-1
1: U116-1 XD2-2 U166-16 U102-1 U178-1
1: U152-1 U165-16 U165-15 U166-15 U204-15
1: U217-1 U190-15 U169-1 U169-15 XB5-1
1: R10-2 VR2-1 C9-2 U220-15 U219-1 C13-2
1: C8-2 C7-2 XB8-2 XB7-2 C12-2 XB6-1
1: XB2-1 C10-2 C14-2 C1-2 C2-2 U195-1

```
 1: R15-2 POT1-3 C15-2 C11-2 XB4-2 XB1-2
 1: XB3-1 VR3-1 U195-14                    .!GND

 2: U244-3 282A-3                          .%282A-3

 3: U251-6 290A-11                         .%290A-11

 4: U195-10 L1-1 C10-1                     .%C10-1

 5: C4-2 R2-2 C3-2                         .%C3-2

 6: U195-12 L1-2 D1-1                      .%D1-1

 7: R5-2 C5-1 D1-2                         .%D1-2

 8: THM1-1 J79-1                           .%J79-1

 9: U86-14 JP2-2                           .%JP2-2

10: U115-12 JP5-2 JP3-2                    .%JP3-2

11: JP7-2 U115-1 JP4-2                     .%JP4-2

12: U115-14 JP10-2 JP9-2                   .%JP9-2

13: R10-1 VR1-1 R11-1                      .%R11-1

14: POT1-2 R4-1                            .%R4-1

15: U130-8 C4-1 R7-2 R5-1                  .%R5-1

16: U116-6 U101-3                          .%U101-3

17: U116-2 U101-5                          .%U101-5

18: U116-19 U101-6                         .%U101-6

19: U127-15 U101-7                         .%U101-7

20: U103-5 U103-6                          .%U103-6

21: U129-12 U103-8                         .%U103-8

22: U24-8 U11-11                           .%U11-11

23: U12-8 U11-12 U37-2 U37-12 U11-2        .%U11-2

24: U24-6 U11-3                            .%U11-3

25: U114-12 U154-4 U114-2                  .%U114-2

26: U101-4 U116-5                          .%U116-5
```

27: U13-6 U12-1	.%U12-1
28: U13-5 U12-10	.%U12-10
29: U25-6 U12-9	.%U12-9
30: U205-2 U127-11	.%U127-11
31: U116-15 U127-3	.%U127-3
32: U116-16 U127-4	.%U127-4
33: U116-12 U127-5	.%U127-5
34: U116-9 U127-6	.%U127-6
35: U129-6 U129-5	.%U129-5
36: R4-2 R3-2 U130-5 U130-10	.%U130-10
37: U130-4 U130-13	.%U130-13
38: U130-11 U130-2	.%U130-2
39: R3-1 C3-1 R2-1 U130-9	.%U130-9
40: U154-10 U139-11	.%U139-11
41: U155-19 U140-11	.%U140-11
42: U155-16 U140-13	.%U140-13
43: U155-15 U140-14	.%U140-14
44: U167-4 U140-2	.%U140-2
45: U155-12 U140-3	.%U140-3
46: U155-9 U140-4	.%U140-4
47: U155-2 U140-6	.%U140-6
48: JP8-2 U141-14	.%U141-14
49: U287-9 U152-12	.%U152-12
50: U179-10 U153-15	.%U153-15
51: U178-8 U165-11	.%U165-11
52: U178-13 U165-12	.%U165-12

53: U178-7 U165-13	.%U165-13
54: U178-14 U165-14	.%U165-14
55: U191-1 U165-6	.%U165-6
56: U191-4 U165-8	.%U165-8
57: U152-18 U166-11	.%U166-11
58: U152-17 U166-12	.%U166-12
59: U152-14 U166-13	.%U166-13
60: U152-13 U166-14	.%U166-14
61: U165-17 U179-14 U166-17	.%U166-17
62: U165-18 U179-13 U166-18	.%U166-18
63: U153-13 U165-3 U166-3	.%U166-3
64: U153-12 U165-4 U166-4	.%U166-4
65: U153-11 U165-5 U166-5	.%U166-5
66: U152-8 U166-6	.%U166-6
67: U152-7 U166-7	.%U166-7
68: U152-4 U166-8	.%U166-8
69: U152-3 U166-9	.%U166-9
70: U205-3 U248-13 U167-2	.%U167-2
71: JP12-2 U168-14	.%U168-14
72: U154-1 U181-12 U181-2	.%U181-2
73: U178-4 U191-11	.%U191-11
74: U165-7 U191-12	.%U191-12
75: U178-3 U191-3	.%U191-3
76: U242-2 U191-6	.%U191-6
77: U178-17 U191-8	.%U191-8
78: U165-9 U191-9	.%U191-9

79: C17-1 R15-1 U195-5	.%U195-5
80: U221-7 U190-17 U204-17	.%U204-17
81: U221-15 U190-18 U204-18	.%U204-18
82: U221-2 U190-19 U204-19	.%U204-19
83: U217-8 U204-7	.%U204-7
84: U101-15 U205-1	.%U205-1
85: U143-6 U205-8	.%U205-8
86: U205-10 U139-8 U205-9	.%U205-9
87: U219-4 U206-10	.%U206-10
88: U219-3 U206-11	.%U206-11
89: U219-13 U206-12	.%U206-12
90: U219-14 U206-13	.%U206-13
91: U204-14 U217-13	.%U217-13
92: U204-13 U217-14	.%U217-14
93: U204-12 U217-17	.%U217-17
94: U204-11 U217-18	.%U217-18
95: U218-8 U217-4	.%U217-4
96: U204-6 U217-7	.%U217-7
97: U167-9 U218-10	.%U218-10
98: R13-2 U218-2	.%U218-2
99: U221-10 U218-9	.%U218-9
100: U220-13 U219-12	.%U219-12
101: U220-14 U219-16	.%U219-16
102: U231-12 U219-17	.%U219-17
103: U231-13 U219-18	.%U219-18
104: U220-11 U219-19	.%U219-19

105: U220-3 U219-2	.%U219-2
106: U220-6 U219-5	.%U219-5
107: U220-2 U219-6	.%U219-6
108: U231-11 U219-7	.%U219-7
109: U231-10 U219-8	.%U219-8
110: U220-5 U219-9	.%U219-9
111: U219-15 U220-10	.%U220-10
112: U246-10 U220-7	.%U220-7
113: U246-7 U220-9	.%U220-9
114: U167-12 U221-6	.%U221-6
115: U230-12 U230-5	.%U230-5
116: U207-14 U206-9 U231-9	.%U231-9
117: U233-6 U241-13	.%U241-13
118: U178-12 U242-12	.%U242-12
119: U270-12 U243-14	.%U243-14
120: U282-10 U243-15	.%U243-15
121: 282A-13 U244-10	.%U244-10
122: U256-13 U256-1 U244-13	.%U244-13
123: U245-6 U258-2 U244-15	.%U244-15
124: 282A-4 U244-6	.%U244-6
125: U220-12 U246-11	.%U246-11
126: U259-11 U246-14	.%U246-14
127: U259-9 U246-15	.%U246-15
128: U259-6 U246-2	.%U246-2
129: U220-4 U246-5	.%U246-5
130: U233-8 U247-1	.%U247-1

131: U249-3 U247-3	.%U247-3
132: U251-3 U247-6	.%U247-6
133: 290A-9 U249-6	.%U249-6
134: U12-13 U25-5	.%U25-5
135: U265-13 U252-12	.%U252-12
136: U265-14 U252-13	.%U252-13
137: U265-3 U252-14	.%U252-14
138: U265-4 U252-15	.%U252-15
139: U254-11 U254-10	.%U254-10
140: U205-4 U254-8	.%U254-8
141: U246-1 U259-12	.%U259-12
142: U245-2 U259-3	.%U259-3
143: U260-11 U260-10	.%U260-10
144: U262-7 U285-10 U261-12	.%U261-12
145: U286-4 U261-6	.%U261-6
146: U286-3 U262-6	.%U262-6
147: U261-11 U262-9	.%U262-9
148: U238-11 U264-11	.%U264-11
149: U238-8 U264-12	.%U264-12
150: U260-9 U264-7	.%U264-7
151: U290-11 U269-11	.%U269-11
152: U245-5 U257-11 U269-2	.%U269-2
153: U243-4 U270-10	.%U270-10
154: U243-13 U270-11	.%U270-11
155: U284-2 U270-4 U270-5	.%U270-5
156: 282A-5 U271-15	.%U271-15

157: 282A-7 U271-2 .%U271-2

158: U283-6 282A-10 U296-2 U271-4 .%U271-4

159: U296-15 U271-12 U283-4 U271-5 .%U271-5

160: U249-2 U251-2 U273-2 U251-7 U273-1
160: .%U273-1

161: U251-12 U273-8 .%U273-8

162: U274-9 U262-11 U274-12 .%U274-12

163: U286-11 U275-6 .%U275-6

164: U273-11 U276-2 U276-12 .%U276-12

165: U285-12 U276-3 .%U276-3

166: 290A-1 U276-6 .%U276-6

167: 290A-3 U276-7 .%U276-7

168: U265-18 U277-11 .%U277-11

169: U265-17 U277-12 .%U277-12

170: U265-8 U277-13 .%U277-13

171: U265-7 U277-14 .%U277-14

172: U252-19 U252-1 U254-3 U277-1 U277-19
172: .%U277-19

173: 282A-6 U283-2 .%U283-2

174: U296-14 U271-13 U283-5 .%U283-5

175: U297-4 U284-3 .%U284-3

176: U271-3 U284-13 U284-4 .%U284-4

177: U284-15 U284-6 U284-7 .%U284-7

178: U262-12 U274-7 U285-11 .%U285-11

179: U285-3 U238-3 U285-13 .%U285-13

180: U276-11 U285-6 .%U285-6

181: U261-7 U285-9 .%U285-9

```
 182: U263-6 U286-12                          .%U286-12

 183: U274-6 U286-1 U286-2                    .%U286-2

 184: U250-6 U286-5                           .%U286-5

 185: U250-7 U286-6                           .%U286-6

 186: U288-6 U287-1 U287-2                    .%U287-2

 187: U285-5 U287-6                           .%U287-6

 188: XC1-1 U288-14 XC2-1 XC3-1 U288-3
 188:                                         .%U288-3
*** Run has multiple outputs

 189: U288-16 U289-8 U288-2 U288-5            .%U288-5

 190: U256-9 U290-9 U269-7 U269-10 U256-11
 190: U256-5 U256-12 U290-10                  .%U290-10
*** Run has multiple outputs

 191: U257-12 U290-8                          .%U290-8

 192: U245-4 U295-4 U295-5 U295-2 U295-1
 192:                                         .%U295-1

 193: U24-11 U37-11                           .%U37-11

 194: U24-3 U37-3                             .%U37-3

 195: U38-10 U139-3 U248-9 U38-8              .%U38-8

 196: U87-7 U51-4                             .%U51-4

 197: U87-5 U73-10                            .%U73-10

 198: U64-11 U90-11 U205-11 U77-11            .%U77-11

 199: U73-2 U87-3                             .%U87-3

 200: U73-15 U87-4                            .%U87-4

 201: U73-7 U87-6                             .%U87-6

 202: XB2-2 VR3-2 XR3-2 XB3-2                 .%XB3-2

 203: XL1-1 XD1-1                             .%XD1-1

 204: XD2-1 XD1-2                             .%XD1-2
```

```
205: R7-1 POT1-1 U130-14 C1-1 C2-1          .+5V

206: XB5-2 C12-1 J99-1 VR2-2 VR1-2 XB7-1
206: C7-1 XR3-1                             .-12V

207: XB8-1 VR1-3 C8-1 R11-2                 .-2V

208: XB6-2 VR2-3 C13-1 C9-1                 .-5.2V

209: U268-15 U281-15 U280-15 U255-15 U293-15
209: U279-15 U267-15 U294-15 U287-8         .166$ L

210: U257-6 U130-1                          .680NS CLK

211: U254-4 U292-11 U253-11 U254-2 U248-12
211: U167-3 U127-2 U101-2 R17-1 U260-8
211: U242-11                                .80NS CLK0^

212: U99-4 U125-4 U222-15 U229-6 U208-4
212:                                        .ADR 0

213: U99-7 U125-7 U239-17 U229-4 U208-7
213:                                        .ADR 1

214: U99-9 U125-9 U239-15 U229-2 U208-9
214:                                        .ADR 2

215: U99-12 U125-12 U239-13 U227-17 U208-12
215:                                        .ADR 3

216: U86-4 U141-4 U239-11 U227-15 U168-4
216:                                        .ADR 4

217: U86-7 U141-7 U239-8 U227-13 U168-7
217:                                        .ADR 5

218: U86-9 U141-9 U239-6 U227-11 U168-9
218:                                        .ADR 6

219: U86-12 U141-12 U239-4 U227-8 U168-12
219:                                        .ADR 7

220: U115-6 U239-2 U227-6                   .ADR 8

221: U115-10 U88-14 U152-15 U102-2 U169-14
221:                                        .ADR SEL 0

222: U115-9 U88-2 U152-16 U102-3 U169-2
222:                                        .ADR SEL 1

223: U205-13 U190-8                         .ALAT
```

```
224: R25-2 U287-4 U287-5 U285-1          .BANK H

225: U282-9 U270-2                       .BLANK CLK

226: U282-14 U271-7 U297-13              .BLANK H

227: U282-15 U296-9                      .BLANK L

228: U22-17 U26-3 U10-17 U9-4 U23-4      .BUF MDI 00

229: U36-17 U39-3 U35-17 U61-17 U48-17
229:                                     .BUF MDI 01

230: U22-13 U26-5 U10-13 U9-8 U23-8      .BUF MDI 02

231: U36-13 U39-5 U35-13 U61-13 U48-13
231:                                     .BUF MDI 03

232: U22-7 U26-7 U10-7 U9-14 U23-14      .BUF MDI 04

233: U36-7 U39-7 U35-7 U61-7 U48-7       .BUF MDI 05

234: U22-3 U26-9 U10-3 U9-18 U23-18      .BUF MDI 06

235: U36-3 U39-9 U35-3 U48-3 U61-3       .BUF MDI 07

236: U22-18 U26-18 U10-18 U23-3 U9-3     .BUF MDI 08

237: U36-18 U39-18 U35-18 U61-18 U48-18
237:                                     .BUF MDI 09

238: U22-14 U26-16 U10-14 U9-7 U23-7     .BUF MDI 10

239: U36-14 U39-16 U35-14 U61-14 U48-14
239:                                     .BUF MDI 11

240: U22-8 U26-14 U10-8 U9-13 U23-13     .BUF MDI 12

241: U36-8 U39-14 U35-8 U61-8 U48-8      .BUF MDI 13

242: U22-4 U26-12 U10-4 U9-17 U23-17     .BUF MDI 14

243: U36-4 U39-12 U35-4 U61-4 U48-4      .BUF MDI 15

244: U141-13 U128-2                      .C ADR 10

245: U125-2 U128-12                      .C ADR 11

246: U125-5 U142-23                      .C ADR 12

247: U125-11 U142-22                     .C ADR 13
```

```
248: U125-14 U142-21                    .C ADR 14
249: U141-2 U142-20                     .C ADR 15
250: U141-5 U142-19                     .C ADR 16
251: U141-11 U142-18                    .C ADR 17
252: JP8-1 U142-17                      .C ADR 18
253: U115-2 U142-16 U169-11             .C ADR 19
254: JP4-1 U114-3 U88-5                 .C ADR 2
255: JP7-1 U142-15                      .C ADR 20
256: U142-14 U169-5                     .C ADR 21
257: U125-3 U114-4                      .C ADR 3
258: U125-6 U114-5                      .C ADR 4
259: U125-10 U114-6 U114-13             .C ADR 5
260: U125-13 U114-11                    .C ADR 6
261: U141-3 U114-10 U128-8              .C ADR 7
262: U141-6 U128-5 U128-6               .C ADR 8
263: U141-10 U128-9                     .C ADR 9
264: U154-12 U190-7                     .C OUT
265: U139-4 U190-9                      .C PAR 1
266: U225-6 U222-11 U223-15 290A-8      .CAS 0 H
267: U225-15 U224-15 290A-10            .CAS 1 H
268: U75-1 U190-11                      .CI0
269: U75-12 U190-13                     .CI1
270: U75-4 U190-12                      .CI2
271: U75-9 U190-14                      .CI3
272: U24-12 U24-13 U75-3 U22-11 U35-11
272:                                    .CIX 0
273: U24-1 U24-2 U75-11 U10-11 U36-11
```

```
273:                                        .CIX 1

274: U24-9 U24-10 U75-6 U9-11 U48-11        .CIX 2

275: U24-4 U24-5 U75-8 U23-11 U61-11        .CIX 3

276: U75-2 U75-13 U75-10 U75-5 U248-3
276:                                        .CLK 0 L

277: U143-5 U290-6 U233-5 U178-11 U257-3
277: U179-2 U153-2 U152-11 U221-9 U217-11
277: U167-11 U207-10                        .CLK 0^

278: U205-12 U260-4 U260-5 U260-1 U264-5
278: U260-2                                 .CLK 10 L

279: U154-11 U264-6 U242-3 U232-3           .CLK 10^

280: U139-5 U287-11 U290-3 U248-2 U248-1
280: U290-4 U290-5 U287-10 U205-5           .CLK 4 L

281: U287-12 U260-6 J176-1 U287-13 U260-3
281:                                        .CLK 7
*** Run has multiple outputs

282: U254-1 U178-6                          .CLK C FIFO EN L

283: U73-9 U154-13 U74-11 U49-11 U62-11
283: U50-11 U126-11 U113-11 U100-11 U112-11
283:                                        .CLK OUT X

284: U139-6 U89-11 U63-11 U76-11            .CLK P ADR

285: U38-11 U205-6                          .CLK PAR ER^

286: U254-5 U242-9                          .CLK VFIFO ENL

287: XC2-2 XC3-2 U274-1 U262-1 U261-1
287: U262-13 U261-13 U274-13 XC1-2 XL1-2
287: U275-1 U263-13 U275-13 U263-1 U250-1
287: U250-13 U276-1 U251-13 U276-13 U251-1
287: U264-13 U264-1 U249-1                  .CLK66

288: U252-18 U277-18 U178-15 U207-2 U207-3
288:                                        .CLR FIFOS

289: U244-14 U244-11 U244-1 U244-7 U244-2
289:                                        .COM

290: U143-10 U156-1 U156-19                 .CRT SIGS ENB

291: U101-10 U127-7 U178-9                  .CUR CNTR ENAB H
```

```
292: U291-6 U265-5                    .CUR DATA 0
293: U291-7 U265-6                    .CUR DATA 1
294: U266-5 U265-2                    .CUR DATA 2
295: U266-6 U265-9                    .CUR DATA 3
296: U266-7 U265-15                   .CUR DATA 4
297: U278-5 U265-16                   .CUR DATA 5
298: U278-6 U265-12                   .CUR DATA 6
299: U278-7 U265-19                   .CUR DATA 7
300: U278-1 U266-1 U291-1 U167-6      .CUR ENB H
301: U277-16 U265-11 U252-16 U248-11  .CUR FIFO UNLD
302: U168-13 U194-2                   .D ADR 10
303: U208-2 U194-12 U193-8            .D ADR 11
304: U208-5 U193-5 U193-6             .D ADR 12
305: U208-11 U193-9                   .D ADR 13
306: U208-14 U193-2                   .D ADR 14
307: U168-2 U193-12 U180-8            .D ADR 15
308: U168-5 U180-5 U180-6             .D ADR 16
309: U168-11 U180-9                   .D ADR 17
310: JP12-1 U180-2                    .D ADR 18
311: U115-15 U169-12 U180-12 U192-8   .D ADR 19
312: JP9-1 U88-4 U181-3               .D ADR 2
313: JP10-1 U192-5 U192-6             .D ADR 20
314: U169-4 U192-9                    .D ADR 21
315: U208-3 U181-4                    .D ADR 3
316: U208-6 U181-5                    .D ADR 4
317: U208-10 U181-6 U181-13           .D ADR 5
```

318: U208-13 U181-11 .D ADR 6

319: U168-3 U181-10 U194-8 .D ADR 7

320: U168-6 U194-5 U194-6 .D ADR 8

321: U168-10 U194-9 .D ADR 9

322: U280-7 U255-7 U281-7 U268-7 U279-7
322: U267-7 U294-7 U293-7 R17-2 .DERUNG 80NS CLK

323: U274-11 U286-8 .DIV SYNC

324: U283-14 U296-12 U297-10 .ECL HIGH

325: U141-15 U125-15 U102-5 .EN AB CUR ADR L

326: U86-15 U99-15 U102-7 .ENAB PROC ADR L

327: U102-6 U208-15 U168-15 .ENABDISPL ADR L

328: U51-5 U12-4 .EVEN A

329: U52-5 U12-3 .EVEN B

330: U245-3 U245-7 U245-1 .FOO

331: U238-1 U242-5 .H MEM REQ H

332: U152-2 U153-1 U179-1 .H STATE CLR

333: U156-2 J189-1 U152-5 .H SYNC

334: U143-4 J71-1 .I/O B ENAB L

335: U114-1 U152-9 .INC CUR ADR CNTR L

336: U178-16 U181-1 .INC DISPL ADR CNTR

337: U129-8 U140-9 U152-19 .INC LINE CNTR L

338: U248-4 U155-6 U248-10 .INTR EN L

339: U143-1 J69-1 .IOA 0

340: U143-2 J169-1 .IOA 1

341: U143-3 J68-1 .IOA 2

342: U154-8 J168-1 .IOA 3

```
343: U154-9 J67-1                          .IOA 4

344: U139-10 J167-1                        .IOA 5

345: U139-9 J66-1                          .IOA 6

346: U129-4 U116-14 U89-12 J64-1 U63-15
346: U156-18                               .IOD 0

347: U129-10 U116-17 U89-15 J164-1 U63-16
347: U156-16                               .IOD 1

348: U142-4 U155-14 J58-1 U76-15 U193-3
348:                                       .IOD 10

349: U142-5 U155-7 J158-1 U76-6 U193-11
349:                                       .IOD 11

350: U142-6 U155-4 J57-1 U76-5 U180-4
350:                                       .IOD 12

351: U142-7 U155-3 J157-1 U76-2 U180-10
351:                                       .IOD 13

352: U142-8 U155-18 J56-1 U76-19 U180-3
352:                                       .IOD 14

353: U142-9 U155-17 J156-1 U76-16 U180-11
353:                                       .IOD 15

354: U142-10 U129-3 U116-13 U89-16 J63-1
354: U63-12 U156-14 U192-4                 .IOD 2

355: U142-11 U129-11 U116-8 U89-19 J163-1
355: U63-9 U192-10                         .IOD 3

356: U128-4 U103-4 U116-7 J62-1 U63-6
356: U156-3 U194-4                         .IOD 4

357: U128-10 U103-10 U116-4 J162-1 U63-5
357: U194-10                               .IOD 5

358: U128-3 U103-3 U116-3 J61-1 U63-2
358: U194-3                                .IOD 6

359: U128-11 U116-18 J161-1 U63-19 U156-5
359: U194-11                               .IOD 7

360: U142-2 U155-13 J59-1 U76-12 U193-4
360:                                       .IOD 8

361: U142-3 U155-8 J159-1 U76-9 U193-10
```

361:	.IOD 9
362: U156-15 U165-19 U166-19 U218-3 U243-11	
362:	.LAND H
363: U238-2 U232-5	.LATCHED RAS NOW H
364: U154-6 U154-5 U142-13 U128-1 U143-13	
364:	.LD CUR ADR CNT L
365: U101-9 U127-9 U152-6	.LD CURX CNTR
366: U248-6 J84-1	.LINE CNT INT L
367: U103-12 U248-5 U156-17	.LINE CNT OVERFLOW L
368: U116-11 U143-11	.LOAD CURSOR X POS
369: U143-14 U154-3 U154-2 U194-1 U193-1	
369: U180-1 U192-1	.LOAD DIS ADR L
370: U129-1 U103-1 U143-15	.LOAD LINE CNTR L
371: U155-11 U143-12	.LOAD VIDEO STATE
372: R21-2 J186-1 U156-6	.LOOPTHRU
373: U90-7 J37-1	.MADR 0
374: U90-8 J137-1	.MADR 1
375: U64-13 J31-1	.MADR 10
376: U64-14 J131-1	.MADR 11
377: U64-17 J29-1	.MADR 12
378: U64-18 J129-1	.MADR 13
379: U77-3 J28-1	.MADR 14
380: U77-4 J128-1	.MADR 15
381: U77-7 J27-1	.MADR 16
382: U77-8 J127-1	.MADR 17
383: U77-13 J26-1	.MADR 18
384: U77-14 J126-1	.MADR 19
385: U90-13 J36-1	.MADR 2

386: U77-17 J38-1 .MADR 20

387: U77-18 J138-1 .MADR 21

388: U90-14 J136-1 .MADR 3

389: U90-17 J34-1 .MADR 4

390: U90-18 J134-1 .MADR 5

391: U64-3 J33-1 .MADR 6

392: U64-4 J133-1 .MADR 7

393: U64-7 J32-1 .MADR 8

394: U64-8 J132-1 .MADR 9

395: U278-4 U291-4 U266-4 U140-7 .MAP 0

396: U278-3 U291-3 U266-3 U140-10 .MAP 1

397: U278-2 U291-2 U266-2 U140-12 .MAP 2

398: U291-12 U292-3 .MAP OUT 0

399: U291-11 U292-4 .MAP OUT 1

400: U266-13 U292-7 .MAP OUT 2

401: U266-12 U292-8 .MAP OUT 3

402: U266-11 U292-13 .MAP OUT 4

403: U278-13 U292-14 .MAP OUT 5

404: U278-12 U292-17 .MAP OUT 6

405: U278-11 U292-18 .MAP OUT 7

406: U13-13 J14-1 U26-17 .MDI 00

407: U25-4 J114-1 U39-17 .MDI 01

408: U25-8 J13-1 U26-15 .MDI 02

409: U25-11 J113-1 U39-15 .MDI 03

410: U13-12 J12-1 U26-13 .MDI 04

411: U13-2 J112-1 U39-13 .MDI 05

```
412: U13-11 J11-1 U26-11                    .MDI 06

413: U25-2 J111-1 U39-11                    .MDI 07

414: U13-10 J9-1 U26-2                      .MDI 08

415: U25-10 J109-1 U39-2                    .MDI 09

416: U25-9 J8-1 U26-4                       .MDI 10

417: U13-4 J108-1 U39-4                     .MDI 11

418: U13-9 J7-1 U26-6                       .MDI 12

419: U25-12 J107-1 U39-6                    .MDI 13

420: U13-8 J6-1 U26-8                       .MDI 14

421: U25-13 J106-1 U39-8                    .MDI 15

422: U52-2 U49-2 U50-2 U113-2 U100-2 J24-1
422:                                        .MDO 0

423: U51-2 U62-2 U74-2 U126-2 U112-2 J124-1
423:                                        .MDO 1

424: U52-10 U49-9 U50-9 U113-9 U100-9
424: J18-1                                  .MDO 10

425: U51-10 U62-9 U74-9 U126-9 U112-9
425: J118-1                                 .MDO 11

426: U52-9 U49-16 U50-16 U113-16 U100-16
426: J17-1                                  .MDO 12

427: U51-9 U62-16 U74-16 U126-16 U112-16
427: J117-1                                 .MDO 13

428: U52-8 U49-12 U50-12 U113-12 U100-12
428: J16-1                                  .MDO 14

429: U51-8 U62-12 U74-12 U126-12 U112-12
429: J116-1                                 .MDO 15

430: U52-1 U49-6 U50-6 U113-6 U100-6 J23-1
430:                                        .MDO 2

431: U51-13 U62-6 U74-6 U126-6 U112-6
431: J123-1                                 .MDO 3

432: U52-13 U49-19 U50-19 U113-19 U100-19
```

```
432: J22-1                                  .MDO 4

433: U51-12 U62-19 U74-19 U126-19 U112-19
433: J122-1                                 .MDO 5

434: U52-12 U49-15 U50-15 U113-15 U100-15
434: J21-1                                  .MDO 6

435: U52-4 U62-15 U74-15 U126-15 U112-15
435: J121-1                                 .MDO 7

436: U52-11 U49-5 U50-5 U113-5 U100-5
436: J19-1                                  .MDO 8

437: U51-11 U62-5 U74-5 U126-5 U112-5
437: J119-1                                 .MDO 9

438: U190-6 J141-1                          .MDO VALID H

439: J181-1 U221-13                         .MEM RQST 0

440: J182-1 U221-4                          .MEM RQST 1

441: J183-1 U221-5                          .MEM RQST 2

442: U293-13 U253-3                         .MEMSHIFT 0

443: U294-13 U253-4                         .MEMSHIFT 1

444: U279-13 U253-7                         .MEMSHIFT 2

445: U267-13 U253-8                         .MEMSHIFT 3

446: U268-13 U253-13                        .MEMSHIFT 4

447: U281-13 U253-14                        .MEMSHIFT 5

448: U255-13 U253-17                        .MEMSHIFT 6

449: U280-13 U253-18                        .MEMSHIFT 7

450: U291-16 U253-2 U252-4                  .MSP0

451: U291-15 U253-5 U277-5                  .MSP1

452: U266-17 U253-6 U252-5                  .MSP2

453: U266-16 U253-9 U277-6                  .MSP3

454: U266-15 U253-12 U252-6                 .MSP4

455: U278-17 U253-15 U277-7                 .MSP5
```

456: U278-16 U253-16 U252-7 .MSP6

457: U278-15 U253-19 U277-8 .MSP7

458: U102-14 U87-14 U204-9 .O SEL 0

459: U102-13 U87-2 U204-8 .O SEL 1

460: U51-6 U12-2 .ODD A

461: U52-6 U12-5 .ODD B

462: U254-13 U217-6 U190-5 U204-5 .OLD READ 0

463: U254-12 U217-9 U190-16 U204-16 .OLD READ 1

464: U102-12 U74-1 U50-1 .OUT ENAB W0

465: U102-11 U49-1 U62-1 .OUT ENAB W1

466: U102-10 U100-1 U112-1 .OUT ENAB W2

467: U102-9 U113-1 U126-1 .OUT ENAB W3

468: U90-6 U190-4 U204-4 .P ADR 0

469: U90-9 U190-3 U204-3 .P ADR 1

470: U86-13 U64-12 U76-13 .P ADR 10

471: U99-2 U64-15 U76-8 .P ADR 11

472: U99-5 U64-16 U76-14 .P ADR 12

473: U99-11 U64-19 U76-7 .P ADR 13

474: U99-14 U77-2 U76-4 .P ADR 14

475: U86-2 U77-5 U76-3 .P ADR 15

476: U77-6 U86-5 U76-18 .P ADR 16

477: U86-11 U77-9 U76-17 .P ADR 17

478: JP2-1 U77-12 U89-13 .P ADR 18

479: U115-13 U77-15 U89-14 U169-13 .P ADR 19

480: JP5-1 U90-12 U88-3 U63-14 .P ADR 2

481: JP3-1 U77-16 U89-17 .P ADR 20

```
482: U77-19 U89-18 U169-3                .P ADR 21

483: U99-3 U90-15 U63-17                 .P ADR 3

484: U99-6 U90-16 U63-13                 .P ADR 4

485: U99-10 U90-19 U63-8                 .P ADR 5

486: U99-13 U64-2 U63-7                  .P ADR 6

487: U86-3 U64-5 U63-4                   .P ADR 7

488: U86-6 U64-6 U63-3                   .P ADR 8

489: U86-10 U64-9 U63-18                 .P ADR 9

490: U12-6 U38-12                        .PAR ER H

491: U248-8 J83-1                        .PAR INTR L

492: U178-5 U243-10                      .PC BLANK L

493: U285-8 U261-3                       .PH<0>

494: U261-5 U262-3 U261-2 U285-4 U285-2
494: U238-10                             .PH<1>

495: U274-3 U262-5 U262-2                .PH<2>

496: U274-5 U275-3 U274-2 U251-11        .PH<3>

497: U275-2 U263-3 U275-5 U238-12 U260-12
497: U273-12 U260-13                     .PH<4>

498: U263-5 U250-3 U263-2 U247-2 U247-5
498: U264-3                              .PH<5>

499: U250-2 U250-11 U250-5 U238-9        .PH<6>

500: U263-11 U250-9 U250-12              .PH<7>

501: U263-12 U275-11 U263-9              .PH<8>

502: U275-12 U275-9 U273-9 U238-13 U264-2
502:                                     .PH<9>

503: U195-3 U258-9 U270-13               .PLL CLK

504: U11-13 U37-4 U37-10 U37-1 U37-13
504: R1-2 U11-4 U11-1 U11-10             .PU 1
```

```
505: U262-10 U274-14 U261-14 U274-10 R22-2
505: U262-15 U274-4 U261-15 U262-4 U274-15
505: U261-4 U262-14 U261-10                .PU 10

506: U276-10 U276-15 U249-15 U251-4 R24-2
506: U276-4 U276-14 U251-10 U249-4 U251-14
506: U264-10 U264-15 U264-4 U251-15 U264-14
506:                                       .PU 11

507: U167-1 U242-13 U242-10 U241-14 U153-10
507: U242-4 U257-1 U242-1 U257-4 U179-9
507: U153-9 U241-11 U241-12 R19-2 U241-10
507: U232-1 U232-4 U221-1 U167-10 U167-13
507: U257-13 U256-10 U256-4 U256-3 U256-2
507: U269-9 U257-10                        .PU 12

508: R8-2 U194-13 U193-13 U180-13 U192-13
508:                                       .PU 14

509: R20-2 U246-6 U230-4 U230-10 U230-1
509: U230-13 U207-1 U207-9 U243-6          .PU 16

510: R12-2 U39-19 U26-19 U73-1 U268-9
510: U281-9 U280-9 U255-9 U293-9 U279-9
510: U267-9 U294-9                         .PU 2

511: U128-13 U103-13 U129-13 R6-2 U103-11
511: U127-10 U140-1 U127-1 U101-1          .PU 5

512: R23-2 U288-15 U288-1 U288-4 U275-4
512: U275-14 U263-14 U275-10 U263-10 U250-14
512: U250-10 U250-15 U250-4 U263-15 U263-4
512: U275-15                               .PU 9

513: U225-11 U224-11 290A-2                .RAS 0 H

514: 290A-4                                .RAS 1 H
*** Only one pin in net

515: U217-5 U217-3                         .RAS CY 1

516: U254-9 U217-2                         .RAS CY 2

517: U232-2 J184-1 U221-12                 .RAS NOW

518: U143-9 U89-1                          .READ HI PAR L

519: U143-7 U38-13 U63-1 U76-1             .READ LO PAR L

520: U243-1 U271-6                         .RESYNC SYNC

521: U233-9 U247-4                         .SEL CAS 0 H
```

*** Run Has no outputs

```
522: U99-1 U86-1 U115-11 U125-1 U141-1
522: U273-3 U168-1 U208-1                .SEL ROW H

523: U130-3 U257-8 U243-7                .SYNC WIND H

524: U257-9 U256-15 U269-1 U256-14       .SYNC WIND L

525: J78-1 THM1-2                        .TEMP CAGE

526: U233-2 J173-1                       .TIME 0

527: U233-4 J174-1                       .TIME 1

528: J89-1 R9-2                          .V SYNC

529: U156-4 U178-2 R9-1                  .V SYNC H

530: XB1-1 VR3-3 XB4-1 C11-1 C5-2 C17-2
530: C15-1 C14-1 U195-7 U195-8           .VEE

531: U292-2 U206-4                       .VFIFO IN0

532: U292-5 U206-5                       .VFIFO IN1

533: U292-6 U206-6                       .VFIFO IN2

534: U292-9 U206-7                       .VFIFO IN3

535: U292-12 U231-4                      .VFIFO IN4

536: U292-15 U231-5                      .VFIFO IN5

537: U292-16 U231-6                      .VFIFO IN6

538: U292-19 U231-7                      .VFIFO IN7

539: U254-6 U230-2                       .VFIFO INCLK

540: U287-3 U230-3 U230-11 U243-5        .VIDCLK66

541: U220-1 U244-12                      .VIDMUX SEL

542: U295-6 U295-3 J91-1                 .VIDOUT
*** Run has multiple outputs

543: U219-11 U244-5                      .VIDREG CLK

544: U259-4 282A-9 U296-13 U284-9 U270-15
544:                                     .VIDSHF CLK
```

```
 545: U259-10 U243-12 282A-2 U297-3        .VIDSHF LD
*** Run has multiple outputs

 546: U230-9 U206-3 U231-3                 .VIDSIC CLK

 547: U231-15 U206-15 U244-4               .VIDSOC CLK
*** Run has multiple outputs

 548: U273-10 U273-13 U166-1 U165-1 U179-7
 548: U153-7 U233-1 U241-9 U190-1 U204-1
 548:                                      .VIDTIME 0

 549: U153-14 U233-3 U166-2 U165-2 U257-2
 549: U190-2 U204-2                        .VIDTIME 1

 550: U140-15 U191-5 U191-13 U191-10       .VRT ST 0

 551: U140-5 U191-2                        .VRT ST 1

 552: U239-16 U53-5 U65-5 U78-5 U91-5 U196-5
 552: U182-5 U170-5 U157-5 U144-5 U131-5
 552: U117-5 U104-5 U209-5 U40-5 U27-5
 552: U14-5 U1-5 U55-5 U67-5 U80-5 U93-5
 552: U198-5 U184-5 U172-5 U159-5 U146-5
 552: U133-5 U119-5 U106-5 U211-5 U42-5
 552: U29-5 U16-5 U3-5                     .WO A0 A L

 553: U239-14 U53-7 U65-7 U78-7 U91-7 U196-7
 553: U182-7 U170-7 U157-7 U144-7 U131-7
 553: U117-7 U104-7 U209-7 U40-7 U27-7
 553: U14-7 U1-7 U55-7 U67-7 U80-7 U93-7
 553: U198-7 U184-7 U172-7 U159-7 U146-7
 553: U133-7 U119-7 U106-7 U211-7 U42-7
 553: U29-7 U16-7 U3-7                     .WO A1 A L

 554: U239-12 U53-6 U65-6 U78-6 U91-6 U196-6
 554: U182-6 U170-6 U157-6 U144-6 U131-6
 554: U117-6 U104-6 U209-6 U40-6 U27-6
 554: U14-6 U1-6 U55-6 U67-6 U80-6 U93-6
 554: U198-6 U184-6 U172-6 U159-6 U146-6
 554: U133-6 U119-6 U106-6 U211-6 U42-6
 554: U29-6 U16-6 U3-6                     .WO A2 A L

 555: U239-9 U53-14 U65-14 U78-14 U91-14
 555: U196-14 U182-14 U170-14 U157-14 U144-14
 555: U131-14 U117-14 U104-14 U209-14 U40-14
 555: U27-14 U14-14 U1-14 U55-14 U67-14
 555: U80-14 U93-14 U198-14 U184-14 U172-14
 555: U159-14 U146-14 U133-14 U119-14 U106-14
 555: U211-14 U42-14 U29-14 U16-14 U3-14
 555:                                      .WO A3 A L
```

```
 556: U239-7 U53-13 U65-13 U78-13 U91-13
 556: U196-13 U182-13 U170-13 U157-13 U144-13
 556: U131-13 U117-13 U104-13 U209-13 U40-13
 556: U27-13 U14-13 U1-13 U55-13 U67-13
 556: U80-13 U93-13 U198-13 U184-13 U172-13
 556: U159-13 U146-13 U133-13 U119-13 U106-13
 556: U211-13 U42-13 U29-13 U16-13 U3-13
 556:                                    .WO A4 A L

 557: U239-5 U53-12 U65-12 U78-12 U91-12
 557: U196-12 U182-12 U170-12 U157-12 U144-12
 557: U131-12 U117-12 U104-12 U209-12 U40-12
 557: U27-12 U14-12 U1-12 U55-12 U67-12
 557: U80-12 U93-12 U198-12 U184-12 U172-12
 557: U159-12 U146-12 U133-12 U119-12 U106-12
 557: U211-12 U42-12 U29-12 U16-12 U3-12
 557:                                    .WO A5 A L

 558: U239-3 U53-15 U65-15 U78-15 U91-15
 558: U196-15 U182-15 U170-15 U157-15 U144-15
 558: U131-15 U117-15 U104-15 U209-15 U40-15
 558: U27-15 U14-15 U1-15 U172-15 U184-15
 558: U198-15 U93-15 U80-15 U67-15 U55-15
 558: U42-15 U29-15 U16-15 U3-15 U159-15
 558: U146-15 U133-15 U119-15 U106-15 U211-15
 558:                                    .WO A6 A L

 559: U222-5 U53-11 U65-11 U78-11 U91-11
 559: U196-11 U182-11 U170-11 U157-11 U144-11
 559: U131-11 U117-11 U104-11 U209-11 U40-11
 559: U27-11 U14-11 U1-11 U55-11 U67-11
 559: U80-11 U93-11 U198-11 U184-11 U172-11
 559: U159-11 U146-11 U133-11 U119-11 U106-11
 559: U211-11 U42-11 U29-11 U16-11 U3-11
 559:                                    .WO A7 A L

 560: U239-18 U53-1 U65-1 U78-1 U91-1 U196-1
 560: U182-1 U170-1 U157-1 U144-1 U131-1
 560: U117-1 U104-1 U209-1 U40-1 U27-1
 560: U14-1 U1-1 U55-1 U67-1 U80-1 U93-1
 560: U198-1 U184-1 U172-1 U159-1 U146-1
 560: U133-1 U119-1 U106-1 U211-1 U42-1
 560: U29-1 U16-1 U3-1                   .WO A8 A L

 561: U222-9                             .WO CAS 0A L
*** Only one pin in net

 562: U22-16 U1-2                        .WO IN<0>

 563: U22-15 U131-2                      .WO IN<10>

 564: U35-15 U144-2                      .WO IN<11>
```

565: U22-9 U157-2 .WO IN<12>

566: U35-9 U170-2 .WO IN<13>

567: U22-5 U182-2 .WO IN<14>

568: U35-5 U196-2 .WO IN<15>

569: U35-16 U14-2 .WO IN<1>

570: U22-12 U27-2 .WO IN<2>

571: U35-12 U40-2 .WO IN<3>

572: U22-6 U53-2 .WO IN<4>

573: U35-6 U65-2 .WO IN<5>

574: U22-2 U78-2 .WO IN<6>

575: U35-2 U91-2 .WO IN<7>

576: U22-19 U104-2 .WO IN<8>

577: U35-19 U117-2 .WO IN<9>

578: U50-3 U293-12 U1-16 .WO OUT<0>

579: U50-8 U279-14 U131-16 .WO OUT<10>

580: U74-8 U267-14 U144-16 .WO OUT<11>

581: U50-17 U268-14 U157-16 .WO OUT<12>

582: U74-17 U281-14 U170-16 .WO OUT<13>

583: U50-13 U255-14 U182-16 .WO OUT<14>

584: U74-13 U280-14 U196-16 .WO OUT<15>

585: U74-3 U294-12 U14-16 .WO OUT<1>

586: U50-7 U279-12 U27-16 .WO OUT<2>

587: U74-7 U267-12 U40-16 .WO OUT<3>

588: U50-18 U268-12 U53-16 .WO OUT<4>

589: U74-18 U281-12 U65-16 .WO OUT<5>

590: U50-14 U255-12 U78-16 .WO OUT<6>

```
591: U74-14 U280-12 U91-16                    .WO OUT<7>

592: U50-4 U293-14 U104-16                    .WO OUT<8>

593: U74-4 U294-14 U117-16                    .WO OUT<9>

594: U37-9 U209-2                             .WO PAR IN

595: U73-5 U209-16                            .WO PAR OUT

596: U222-18 U1-3 U104-3 U40-3 U144-3
596: U27-3 U131-3 U14-3 U117-3 U78-3 U182-3
596: U65-3 U170-3 U53-3 U157-3 U209-3
596: U91-3 U196-3                             .WO WRITE A L

597: U223-5 U78-10 U65-10 U53-10 U40-10
597: U27-10 U14-10 U1-10 U91-10 U196-10
597: U182-10 U170-10 U157-10 U144-10 U131-10
597: U117-10 U104-10 U209-10 U211-10 U106-10
597: U119-10 U133-10 U146-10 U159-10 U172-10
597: U184-10 U198-10 U93-10 U80-10 U67-10
597: U55-10 U42-10 U29-10 U16-10 U3-10
597:                                          .W1 CAS 0A L

598: U224-5 U53-17 U65-17 U78-17 U91-17
598: U196-17 U182-17 U170-17 U157-17 U144-17
598: U131-17 U117-17 U104-17 U209-17 U40-17
598: U27-17 U14-17 U1-17 U55-17 U67-17
598: U80-17 U93-17 U198-17 U184-17 U172-17
598: U159-17 U146-17 U133-17 U119-17 U106-17
598: U211-17 U42-17 U29-17 U16-17 U3-17
598:                                          .W1 CAS 1A L

599: U10-16 U3-2                              .W1 IN<0>

600: U10-15 U133-2                            .W1 IN<10>

601: U36-15 U146-2                            .W1 IN<11>

602: U10-9 U159-2                             .W1 IN<12>

603: U36-9 U172-2                             .W1 IN<13>

604: U10-5 U184-2                             .W1 IN<14>

605: U36-5 U198-2                             .W1 IN<15>

606: U36-16 U16-2                             .W1 IN<1>

607: U10-12 U29-2                             .W1 IN<2>
```

608: U36-12 U42-2 .W1 IN<3>

609: U10-6 U55-2 .W1 IN<4>

610: U36-6 U67-2 .W1 IN<5>

611: U10-2 U80-2 .W1 IN<6>

612: U36-2 U93-2 .W1 IN<7>

613: U10-19 U106-2 .W1 IN<8>

614: U36-19 U119-2 .W1 IN<9>

615: U49-3 U293-10 U3-16 .W1 OUT<0>

616: U49-8 U279-11 U133-16 .W1 OUT<10>

617: U62-8 U267-11 U146-16 .W1 OUT<11>

618: U49-17 U268-11 U159-16 .W1 OUT<12>

619: U62-17 U281-11 U172-16 .W1 OUT<13>

620: U49-13 U255-11 U184-16 .W1 OUT<14>

621: U62-13 U280-11 U198-16 .W1 OUT<15>

622: U62-3 U294-10 U16-16 .W1 OUT<1>

623: U49-7 U279-10 U29-16 .W1 OUT<2>

624: U62-7 U267-10 U42-16 .W1 OUT<3>

625: U49-18 U268-10 U55-16 .W1 OUT<4>

626: U62-18 U281-10 U67-16 .W1 OUT<5>

627: U49-14 U255-10 U80-16 .W1 OUT<6>

628: U62-14 U280-10 U93-16 .W1 OUT<7>

629: U49-4 U293-11 U106-16 .W1 OUT<8>

630: U62-4 U294-11 U119-16 .W1 OUT<9>

631: U37-5 U211-2 .W1 PAR IN

632: U73-12 U211-16 .W1 PAR OUT

633: U224-9 U78-4 U65-4 U53-4 U40-4 U27-4
633: U14-4 U1-4 U91-4 U196-4 U182-4 U170-4

633: U157-4 U144-4 U131-4 U117-4 U104-4
633: U209-4 U196-9 U182-9 U170-9 U157-9
633: U144-9 U131-9 U117-9 U104-9 U209-9
633: U91-9 U78-9 U65-9 U53-9 U40-9 U27-9
633: U14-9 U1-9 U55-9 U67-9 U80-9 U93-9
633: U198-4 U184-4 U172-4 U159-4 U146-4
633: U133-4 U119-4 U106-4 U211-4 U198-9
633: U184-9 U172-9 U159-9 U146-9 U133-9
633: U119-9 U106-9 U211-9 U93-4 U80-4
633: U67-4 U55-4 U42-4 U29-4 U16-4 U3-4
633: U42-9 U29-9 U16-9 U3-9 .W1 RAS A L

634: U223-14 U3-3 U106-3 U42-3 U146-3
634: U29-3 U133-3 U16-3 U119-3 U211-3
634: U93-3 U198-3 U80-3 U184-3 U67-3 U172-3
634: U55-3 U159-3 .W1 WRITE A L

635: U9-5 U5-2 .W2 IN<0>

636: U9-6 U135-2 .W2 IN<10>

637: U48-15 U148-2 .W2 IN<11>

638: U9-12 U161-2 .W2 IN<12>

639: U48-9 U174-2 .W2 IN<13>

640: U9-16 U186-2 .W2 IN<14>

641: U48-5 U200-2 .W2 IN<15>

642: U48-16 U18-2 .W2 IN<1>

643: U9-9 U31-2 .W2 IN<2>

644: U48-12 U44-2 .W2 IN<3>

645: U9-15 U57-2 .W2 IN<4>

646: U48-6 U69-2 .W2 IN<5>

647: U9-19 U82-2 .W2 IN<6>

648: U48-2 U95-2 .W2 IN<7>

649: U9-2 U108-2 .W2 IN<8>

650: U48-19 U121-2 .W2 IN<9>

651: U100-3 U293-4 U5-16 .W2 OUT<0>

652: U100-8 U279-5 U135-16 .W2 OUT<10>

```
653: U112-8 U267-5 U148-16                .W2 OUT<11>

654: U100-17 U268-5 U161-16               .W2 OUT<12>

655: U112-17 U281-5 U174-16               .W2 OUT<13>

656: U100-13 U255-5 U186-16               .W2 OUT<14>

657: U112-13 U280-5 U200-16               .W2 OUT<15>

658: U112-3 U294-4 U18-16                 .W2 OUT<1>

659: U100-7 U279-4 U31-16                 .W2 OUT<2>

660: U112-7 U267-4 U44-16                 .W2 OUT<3>

661: U100-18 U268-4 U57-16                .W2 OUT<4>

662: U112-18 U281-4 U69-16                .W2 OUT<5>

663: U100-14 U255-4 U82-16                .W2 OUT<6>

664: U112-14 U280-4 U95-16                .W2 OUT<7>

665: U100-4 U293-5 U108-16                .W2 OUT<8>

666: U112-4 U294-5 U121-16                .W2 OUT<9>

667: U11-9 U213-2                         .W2 PAR IN

668: U73-13 U213-16                       .W2 PAR OUT

669: U234-14 U5-3 U108-3 U44-3 U148-3
669: U31-3 U135-3 U18-3 U121-3 U213-3
669: U95-3 U200-3 U82-3 U186-3 U69-3 U174-3
669: U57-3 U161-3                         .W2 WRITE A L

670: U227-12 U57-5 U69-5 U82-5 U95-5 U200-5
670: U186-5 U174-5 U161-5 U148-5 U135-5
670: U121-5 U108-5 U213-5 U44-5 U31-5
670: U18-5 U5-5 U163-5 U176-5 U188-5 U202-5
670: U97-5 U84-5 U71-5 U59-5 U46-5 U33-5
670: U20-5 U7-5 U150-5 U137-5 U123-5 U110-5
670: U215-5                               .W3 A0 A L

671: U227-9 U57-7 U69-7 U82-7 U95-7 U200-7
671: U186-7 U174-7 U161-7 U148-7 U135-7
671: U121-7 U108-7 U213-7 U44-7 U31-7
671: U18-7 U5-7 U163-7 U176-7 U188-7 U202-7
671: U97-7 U84-7 U71-7 U59-7 U46-7 U33-7
671: U20-7 U7-7 U150-7 U137-7 U123-7 U110-7
```

```
671: U215-7                                   .W3 A1 A L

672: U227-7 U57-6 U69-6 U82-6 U95-6 U200-6
672: U186-6 U174-6 U161-6 U148-6 U135-6
672: U121-6 U108-6 U213-6 U44-6 U31-6
672: U18-6 U5-6 U163-6 U176-6 U188-6 U202-6
672: U97-6 U84-6 U71-6 U59-6 U46-6 U33-6
672: U20-6 U7-6 U150-6 U137-6 U123-6 U110-6
672: U215-6                                   .W3 A2 A L

673: U227-5 U57-14 U69-14 U82-14 U95-14
673: U200-14 U186-14 U174-14 U161-14 U148-14
673: U135-14 U121-14 U108-14 U213-14 U44-14
673: U31-14 U18-14 U5-14 U163-14 U176-14
673: U188-14 U202-14 U97-14 U84-14 U71-14
673: U59-14 U46-14 U33-14 U20-14 U7-14
673: U150-14 U137-14 U123-14 U110-14 U215-14
673:                                          .W3 A3 A L

674: U227-3 U57-13 U69-13 U82-13 U95-13
674: U200-13 U186-13 U174-13 U161-13 U148-13
674: U135-13 U121-13 U108-13 U213-13 U44-13
674: U31-13 U18-13 U5-13 U163-13 U176-13
674: U188-13 U202-13 U97-13 U84-13 U71-13
674: U59-13 U46-13 U33-13 U20-13 U7-13
674: U150-13 U137-13 U123-13 U110-13 U215-13
674:                                          .W3 A4 A L

675: U229-18 U57-12 U69-12 U82-12 U95-12
675: U200-12 U186-12 U174-12 U161-12 U148-12
675: U135-12 U121-12 U108-12 U213-12 U44-12
675: U31-12 U18-12 U5-12 U163-12 U176-12
675: U188-12 U202-12 U97-12 U84-12 U71-12
675: U59-12 U46-12 U33-12 U20-12 U7-12
675: U150-12 U137-12 U123-12 U110-12 U215-12
675:                                          .W3 A5 A L

676: U229-16 U57-15 U69-15 U82-15 U95-15
676: U200-15 U186-15 U174-15 U161-15 U148-15
676: U135-15 U121-15 U108-15 U213-15 U44-15
676: U31-15 U18-15 U5-15 U163-15 U176-15
676: U188-15 U202-15 U97-15 U84-15 U71-15
676: U59-15 U46-15 U33-15 U20-15 U7-15
676: U150-15 U137-15 U123-15 U110-15 U215-15
676:                                          .W3 A6 A L

677: U229-14 U174-11 U186-11 U200-11 U95-11
677: U82-11 U69-11 U57-11 U44-11 U31-11
677: U18-11 U5-11 U161-11 U148-11 U135-11
677: U121-11 U108-11 U213-11 U163-11 U176-11
677: U188-11 U202-11 U97-11 U84-11 U71-11
677: U59-11 U46-11 U33-11 U20-11 U7-11
```

```
677: U150-11 U137-11 U123-11 U110-11 U215-11
677:                                    .W3 A7 A L

678: U227-14 U57-1 U69-1 U82-1 U95-1 U200-1
678: U186-1 U174-1 U161-1 U148-1 U135-1
678: U121-1 U108-1 U213-1 U44-1 U31-1
678: U18-1 U5-1 U163-1 U176-1 U188-1 U202-1
678: U97-1 U84-1 U71-1 U59-1 U46-1 U33-1
678: U20-1 U7-1 U150-1 U137-1 U123-1 U110-1
678: U215-1                             .W3 A8 A L

679: U225-14 U200-10 U186-10 U174-10 U161-10
679: U148-10 U135-10 U121-10 U108-10 U213-10
679: U95-10 U82-10 U69-10 U57-10 U44-10
679: U31-10 U18-10 U5-10 U110-10 U123-10
679: U137-10 U150-10 U163-10 U176-10 U188-10
679: U202-10 U97-10 U84-10 U71-10 U59-10
679: U46-10 U33-10 U20-10 U7-10 U215-10
679:                                    .W3 CAS 0A L

680: U225-5 U57-17 U69-17 U82-17 U95-17
680: U200-17 U186-17 U174-17 U161-17 U148-17
680: U135-17 U121-17 U108-17 U213-17 U44-17
680: U31-17 U18-17 U5-17 U163-17 U176-17
680: U188-17 U202-17 U97-17 U84-17 U71-17
680: U59-17 U46-17 U33-17 U20-17 U7-17
680: U150-17 U137-17 U123-17 U110-17 U215-17
680:                                    .W3 CAS 1A L

681: U23-5 U7-2                         .W3 IN<0>

682: U23-6 U137-2                       .W3 IN<10>

683: U61-15 U150-2                      .W3 IN<11>

684: U23-12 U163-2                      .W3 IN<12>

685: U61-9 U176-2                       .W3 IN<13>

686: U23-16 U188-2                      .W3 IN<14>

687: U61-5 U202-2                       .W3 IN<15>

688: U61-16 U20-2                       .W3 IN<1>

689: U23-9 U33-2                        .W3 IN<2>

690: U61-12 U46-2                       .W3 IN<3>

691: U23-15 U59-2                       .W3 IN<4>

692: U61-6 U71-2                        .W3 IN<5>
```

693: U23-19 U84-2 .W3 IN<6>

694: U61-2 U97-2 .W3 IN<7>

695: U23-2 U110-2 .W3 IN<8>

696: U61-19 U123-2 .W3 IN<9>

697: U113-3 U293-2 U7-16 .W3 OUT<0>

698: U113-8 U279-3 U137-16 .W3 OUT<10>

699: U126-8 U267-3 U150-16 .W3 OUT<11>

700: U113-17 U268-3 U163-16 .W3 OUT<12>

701: U126-17 U281-3 U176-16 .W3 OUT<13>

702: U113-13 U255-3 U188-16 .W3 OUT<14>

703: U126-13 U280-3 U202-16 .W3 OUT<15>

704: U126-3 U294-2 U20-16 .W3 OUT<1>

705: U113-7 U279-2 U33-16 .W3 OUT<2>

706: U126-7 U267-2 U46-16 .W3 OUT<3>

707: U113-18 U268-2 U59-16 .W3 OUT<4>

708: U126-18 U281-2 U71-16 .W3 OUT<5>

709: U113-14 U255-2 U84-16 .W3 OUT<6>

710: U126-14 U280-2 U97-16 .W3 OUT<7>

711: U113-4 U293-3 U110-16 .W3 OUT<8>

712: U126-4 U294-3 U123-16 .W3 OUT<9>

713: U11-5 U215-2 .W3 PAR IN

714: U73-4 U215-16 .W3 PAR OUT

715: U225-9 U57-9 U69-9 U82-9 U95-9 U200-4
715: U186-4 U174-4 U161-4 U148-4 U135-4
715: U121-4 U108-4 U213-4 U200-9 U186-9
715: U174-9 U161-9 U148-9 U135-9 U121-9
715: U108-9 U213-9 U95-4 U82-4 U69-4 U57-4
715: U44-4 U31-4 U18-4 U5-4 U44-9 U31-9
715: U18-9 U5-9 U163-4 U176-4 U188-4 U202-4

```
715: U97-4 U84-4 U71-4 U59-4 U46-4 U33-4
715: U20-4 U7-4 U97-9 U84-9 U71-9 U59-9
715: U46-9 U33-9 U20-9 U7-9 U202-9 U188-9
715: U176-9 U163-9 U150-9 U137-9 U123-9
715: U110-9 U215-9 U150-4 U137-4 U123-4
715: U110-4 U215-4                          .W3 RAS A L

716: U228-7 U163-3 U59-3 U71-3 U176-3
716: U84-3 U188-3 U215-3 U97-3 U202-3
716: U20-3 U123-3 U33-3 U137-3 U46-3 U150-3
716: U7-3 U110-3                            .W3 WRITE A L

717: U222-2 U217-19                         .WRITE 0 H

718: U223-6 U217-16                         .WRITE 1 H

719: U234-6 U217-15                         .WRITE 2 H

720: U228-13 U217-12                        .WRITE 3 H

721: U25-1 U155-5                           .WRITE BAD PARITY
```