| REV | DESCRIPTION | DATE | APPR |
|---|---|---|---|
| A | ADDED BNPF @ 5A | 12-11-74 | Matt |
| B | ADJUSTED PROGRAM TIMING | 2-13-75 | Matt |

THIS DOCUMENT CONTAINS PROPRIETARY INFORMATION BELONGING TO PRO-LOG CORPORATION, AND SUCH INFORMATION MAY NOT BE DISCLOSED TO OTHERS, REPRODUCED, COPIED OR USED WITHOUT WRITTEN AUTHORITY FROM AN OFFICER OF PRO-LOG CORPORATION.

M. Brewer 11-4-74

PROGRAM SERIES 90
PM 9001 , 1702A

PRO-LOG CORPORATION

| A | 100793 | REV B | SHT 1 OF |
|---|---|---|---|

USE WITH CONTROL PROGRAM 100789

PRO-LOG CORPORATION

PROGRAM ASSEMBLY FORM

TITLE

DATE

| HEXADECIMAL PAGE ADR | HEXADECIMAL LINE ADR | HEXADECIMAL INSTR | MNEMONIC LABEL | MNEMONIC INSTRUCTION OPERATION | MNEMONIC INSTRUCTION OPERAND | COMMENTS |
|---|---|---|---|---|---|---|
| 8 | 00 | 20 | (FIN-1st-LAST) | FIM | P0 | Move first and last address to RAM |
| | 1 | 20 | | | 8 A-A LOC | [R0] = 2 ; [R1] = 0 |
| | 2 | 38 | | FIN | P4 | [R8] = 7 [R9] = C |
| | 03 | 61 | DO-1st-LAST | INC | 1 | |
| | 4 | 32 | | FIN | P1 | [R2] = 0 [R3] = C |
| | 5 | 29 | | SRC | P4 | |
| | 6 | A3 | | LD | 3 | |
| | 7 | E0 | | WRM | | |
| | 8 | 79 | | ISZ | 9 | |
| | 9 | 03 | | | DO-1st-LAST | |
| | A | C0 | | BBL | 0 | |
| | 0B | 38 | (FIN 5 PAIR) | FIN | P4 | Fetch N pairs for subroutines |
| | C | 61 | | INC | 1 | |
| | D | 3A | | FIN | P5 | |
| | E | 61 | | INC | 1 | |
| | 0F | 34 | (FIN 3 PAIR) | FIN | P2 | |
| | 10 | 61 | | INC | 1 | |
| | 11 | 3C | (FIN 2 PAIR) | FIN | P6 | |
| | 2 | 61 | | INC | 1 | |
| | 3 | 32 | | FIN | P1 | |
| | 4 | C0 | | BBL | 0 | |
| | 15 | 3C | (FIN 2 TTY) | FIN | P6 | Fetch 2 pairs, TTY and PT |
| | 6 | 61 | | INC | 1 | |
| | 7 | 3A | | FIN | P5 | |
| | 8 | C0 | | BBL | 0 | |
| | 19 | 20 | (FIN ADR) | FIM | P0 | Fetch 2 pairs for addressing |
| | A | 4C | | | 8 ADR ROM | |
| | B | 48 | | JUN | | |
| | C | 11 | | | (FIN 2 PAIR) | |
| | D | | | | | |
| | E | | | | | |
| | F | | | | | |

100793

PRO-LOG CORPORATION

PROGRAM ASSEMBLY FORM

TITLE

DATE

| HEXADEC | | | MNEMONIC | | | COMMENTS | |
|---|---|---|---|---|---|---|---|
| PAGE ADR | LINE ADR | INSTR | LABEL | INSTRUCTION OPERATION | INSTRUCTION OPERAND | | |
| 8 | 20 | 7C | 8 AA LOC | CST | | To RAM location | |
| | 1 | 00 | | CST | | First and last address | |
| | 2 | 00 | | | | | |
| | 3 | 0F | | | | | |
| | 4 | 0F | | | | | |
| | 5 | 00 | | | | | |
| | 6 | 00 | | | | | |
| | 7 | 00 | | | | | |
| | 8 | 00 | | | | | |
| | 29 | 74 | 8 CLR RAM | | | P6 to RAM location | (STORE RAM) |
| | A | 0E | | | | P1 Zero; Count | |
| | 2B | 70 | 8 MOVE/CMP | | | P2 to RAM location | (CMP DATA)(MOVE RAM) |
| | 2C | 62 | 8 CUR DATA | | | P6 from RAM location | (RD MASTER)(DATA INN) |
| | D | 0E | | | | P1 --- ; Count | TTY |
| | 2E | 70 | 8 Zero | | | P6 to RAM location | (SET ZERO) |
| | F | 0E | | | | P1 Non-Prog State; Count | |
| | 30 | 6A | 8 CUR-END | | | P2 End address MSD | {ADR CHK} |
| | 1 | 60 | | | | P6 Current address MSD | |
| | 2 | 0E | | | | P1 --- ; Count | |
| | 33 | 7E | 8 CUR-LAST | | | P2 Last address MSD | |
| | 34 | 60 | 8 CUR ADR | | | P6 Current address MSD | (RD MASTER) |
| | 5 | 0E | | | | P1 --- ; Count | TTY |
| | 36 | 61 | 8 COUNT | | | P6 Current address LSD | |
| | 7 | 0E | | | | P1 --- ; Count | |
| | 38 | CC | 8 RD - AA | | 0011 0011 | P2 AA Display mask | (RD - AA) |
| | 39 | 68 | 8 RD TTY-AA | | | P6 Start Address MSD | RDTTY |
| | A | 1C | | | 1000 C | P1 1 ; TTY Count | |
| | 3B | 0C | 8 RD-AD | | 0011 0000 | P4 A Display mask | {RD-AD} |
| | C | 08 | | | 0001 0000 | P5 Position 4 | |
| | D | CC | | | 0011 0011 | P2 AD mask rotated | |
| | E | 62 | | CST | | P6 To RAM location | |
| | F | 80 | | CST | 0001 XXXX | P1 8 ; --- | |

1007963

PRO-LOG CORPORATION

PROGRAM ASSEMBLY FORM

TITLE

DATE

| HEXADECIMAL PAGE ADR | HEXADECIMAL LINE ADR | HEXADECIMAL INSTR | MNEMONIC LABEL | MNEMONIC INSTRUCTION OPERATION | MNEMONIC INSTRUCTION OPERAND | COMMENTS | |
|---|---|---|---|---|---|---|---|
| 8 | 40 | CC | 8 RD CHNG | CST | 0011 0011 | P2 AD mask | STR CHNG |
| | 1 | 60 | | | | P6 Current address | |
| | 2 | 10 | | | 1000 XXXX | P1 1 ; --- | |
| | 43 | CC | 8 DISP-AD | | 0011 0011 | P2 AD mask | (DISP AD) |
| | 44 | 60 | 8 TTY-AD/CHNG | | | P6 Current address | RD TTY; STR CHNG |
| | 5 | 0C | | | | P1 --- ; Count | |
| | 46 | CC | 8 1st-LAST | | 0011 0011 | P2 AA mask | (DISPLAY) |
| | 7 | 7C | | | | P6 To RAM location | |
| | 8 | 0C | | | | P1 --- ; Count | |
| | 49 | 68 | 8 MV 1st-LAST | | | P2 To RAM location | (MOV RAM) |
| | A | 7C | | | | P6 From RAM location | 1st-LAST to ST-END |
| | B | 0C | | | | P1 --- ; Count | |
| | 4C | 60 | 8 ADR ROM | | | P6 From RAM location | (FIN ADR) |
| | D | AE | | | | P1 To port; Count | |
| | 4E | 62 | 8 RD COPY | | | P6 To RAM location | (RD COPY) |
| | F | EE | | | | P1 From port; Count | |
| | 50 | 62 | 8 RD MAST | | | P6 To RAM location | (RD MASTER) |
| | 1 | 9E | | | | P1 From port; Count | |
| | 52 | 60 | 8 MV-ST-CUR | | | P2 To RAM location | (MV ST -- CUR) |
| | 3 | 68 | | | | P6 From RAM location | |
| | 4 | 0E | | CST | | P1 --- ; Count | |
| | 55 | C0 | (SKP/RTRY) | BBL | 0 | CO = SKIP: CI = RETRY | |
| | 6 | — | | | | | |
| | 57 | 62 | 8 RESTORE | CST | | P2 To RAM location | (RESTORE) |
| | 8 | 70 | | CST | | P6 From RAM location | |
| | 9 | 0E | | CST | | P1 --- ; Count | |
| | 5A | 62 | 8 BNPF | CST | | P6 CURRENT DATA | BNPF TAPE |
| | B | C8 | | CST | | P5 BYTE COUNT; BIT COUNT | |
| | C | | | | | | |
| | D | | | | | | |
| | E | | | | | | |
| | F | | | | | | |

100793A

PRO-LOG CORPORATION

PROGRAM ASSEMBLY FORM

TITLE

DATE

| HEXADECIMAL PAGE ADR | LINE ADR | INSTR | MNEMONIC LABEL | INSTRUCTION OPERATION | OPERAND | COMMENTS |
|---|---|---|---|---|---|---|
| 8 | 60 | 52 | $PROGRAM$ | JMS | | Check for ZERO state |
| | 1 | 11 | | | [SET ZERO] | |
| | 2 | 52 | | JMS | | |
| | 3 | 2E | | | [CMP DATA] | |
| | 4 | 1C | | JCN | A1 | |
| | 5 | 8E | | | LAST CHK | |
| | 6 | 22 | | FIM | P1 | Send data to COPY |
| | 7 | FE | | | PORT, # | |
| | 8 | 2C | | FIM | P6 | |
| | 9 | 62 | | | CUR DAT LOC | |
| | 6A | 2D | DO-ALL | SRC | P6 | |
| | B | E9 | | RDM | | |
| | C | 23 | | SRC | P1 | |
| | D | F2 | | WRR | | |
| | E | 62 | | INC | 2 | |
| | F | 6D | | INC | D | |
| | 70 | 73 | | ISZ | 3 | |
| | 1 | 6A | | | DO ALL | |
| | 2 | 52 | | JMS | | Save CUR data for check |
| | 3 | 6F | | | [SAV CUR DATA] | |
| | 4 | 28 | | FIM | P4 | |
| | 5 | 00 | | | ZERO | |
| | 6 | 2A | | FIM | P5 | E0 = 32 |
| * | 77 | E0 | | | MAX TRY | 80 = 128 |
| | 78 | 24 | NEXTTRY | FIM | P2 | Pulse COPY once |
| | 9 | FF | | | ONE TRY | |
| | A | 58 | | JMS | | |
| | B | A2 | | | [PULSE] | |
| | C | 52 | | JMS | | Read & check |
| | D | 1E | | | [RD COPY] | |
| | E | 14 | | JCN | A0 | |
| | F | 93 | | | TRY AGAIN | |

100793

PRO-LOG CORPORATION

PROGRAM ASSEMBLY FORM

TITLE

DATE

| HEXADECIMAL PAGE ADR | HEXADECIMAL LINE ADR | HEXADECIMAL INSTR | MNEMONIC LABEL | MNEMONIC INSTRUCTION OPERATION | MNEMONIC INSTRUCTION OPERAND | COMMENTS |
|---|---|---|---|---|---|---|
| 8 | 80 | A8 | | LD | 8 | Set good measure count |
| | 1 | F4 | | CMA | | |
| | 2 | B9 | | XCH | 8 | |
| | 3 | A9 | | LD | 9 | |
| | 4 | F4 | | CMA | | |
| | 5 | B9 | | XCH | 9 | |
| | 86 | 24 | GOOD MEAS | FIM | P2 | Pulse Copy for overchange |
| | 7 | FC | | | N TIMES | F8 = 8 Y, FC = 4 |
| | 8 | 58 | | JMS | | |
| | 9 | A2 | | | [PULSE] | |
| | A | 79 | | ISZ | 9 | |
| | B | 86 | | | GOOD MEAS | |
| | C | 78 | | ISZ | 8 | |
| | D | 86 | | | GOOD MEAS | |
| | 8E | 52 | LASTCHK | JMS | | See if COPY is still good |
| | F | 1E | | | [RD COPY] | |
| | 90 | 14 | | JCN | A0 | |
| | 1 | 9A | | | PROG ERR | |
| | 92 | C1 | 8BBL1 | BBL | 1 | |
| | 93 | 79 | TRY AGAIN | ISZ | 9 | Count the good measure count |
| | 4 | 96 | | | PLUS 1 | |
| | 5 | 68 | | INC | 8 | |
| | 96 | 7B | PLUS 1 | ISZ | B | Try N times |
| | 7 | 78 | | | NEXT TRY | |
| | 8 | 7A | | ISZ | A | |
| | 9 | 78 | | | NEXT TRY | |
| | 9A | 28 | PROG ERR | FIM | P4 | Insert an "E" |
| | B | EC | | | 0011 0111 | |
| | C | DE | | LDM | E | |
| | D | 41 | | JUN | | |
| | E | 67 | | | (DISP) | |
| | F | | | | | |

100793

PRO-LOG CORPORATION

PROGRAM ASSEMBLY FORM

TITLE

DATE

| HEXADECIMAL PAGE ADR | HEXADECIMAL LINE ADR | HEXADECIMAL INSTR | MNEMONIC LABEL | MNEMONIC INSTRUCTION OPERATION | MNEMONIC INSTRUCTION OPERAND | COMMENTS |
|---|---|---|---|---|---|---|
| 8 | A 0 | | | | | |
| | 1 | | | | | |
| | A 2 | 58 | [PULSE] | JMS | | Address complemented |
| | 3 | 19 | | | (FIN ADR) | |
| | 4 | 52 | | JMS | | |
| | 5 | 60 | | | (ADRCOMPL) | |
| | 6 | 20 | | FIM | P0 | P gate ON |
| | 7 | C0 | | | PORT C | |
| | 8 | 21 | | SRC | P0 | |
| | 9 | D8 | | LDM | 8 | |
| | A | E2 | | WRR | | |
| | B | 58 | | JMS | | Address normal |
| | C | 19 | | | (FIN ADR) | |
| | D | 52 | | JMS | | |
| | E | 62 | | | (ADR ROM) | |
| | F | 20 | | FIM | P0 | Pulse ON |
| | B 0 | C0 | | | PORT C | |
| | 1 | 21 | | SRC | P0 | |
| | 2 | DC | | LDM | C | |
| | 3 | E2 | | WRR | | |
| | 4 | 20 | | FIM | P0 | Pulse width E4 = 4.1MS |
| B | B 5 | 58 | | | WIDTH | 58 = 3.0MS |
| | 6 | 51 | | JMS | | |
| | 7 | 52 | | | (SHORT D) | |
| | 8 | D8 | | LDM | 8 | Pulse OFF |
| 1 | 9 | E2 | | WRR | | |
| 0 | A | D0 | | LDM | 0 | P gate OFF |
| 0 | B | E2 | | WRR | | |
| B 7 | C | 20 | | FIM | P0 | Duty cycle delay |
| B 9 | D | 8C | | | FINE | 8C } |
| 3 | E | 22 | | FIM | P1 | DF } 17.5 millisec |
| 8 | F | DF | | | COARSE | |

PRO-LOG CORPORATION

PROGRAM ASSEMBLY FORM

| HEXADECIMAL PAGE ADR | HEXADECIMAL LINE ADR | HEXADECIMAL INSTR | MNEMONIC LABEL | MNEMONIC INSTRUCTION OPERATION | MNEMONIC INSTRUCTION OPERAND | TITLE / DATE / COMMENTS |
|---|---|---|---|---|---|---|
| 8 | C 0 | 51 | | JMS | | |
| | 1 | 59 | | | (VAR Δ) | ↓ |
| | 2 | 75 | | ISZ | 5 | ↓ Count burst |
| | 3 | A2 | | | [PULSE] | ↓ |
| | 4 | 74 | | ISZ | 4 | ↓ |
| | 5 | A2 | | | [PULSE] | ↓ |
| | 6 | C0 | | BBL | 0 | |
| | 7 | | | | | |
| | 8 | | | | | |
| | 9 | | | | | |
| | A | | | | | |
| | B | | | | | |
| | C | | | | | |
| | D | | | | | |
| | E | | | | | |
| | F | | | | | |
| | D 0 | | | | | |
| | 1 | | | | | |
| | 2 | | | | | |
| | 3 | | | | | |
| | 4 | | | | | |
| | 5 | | | | | |
| | 6 | | | | | |
| | 7 | | | | | |
| | 8 | | | | | |
| | 9 | | | | | |
| 1 | A | | | | | |
| 0 | B | | | | | |
| 0 | C | | | | | |
| 7 | D | | | | | |
| 9 | E | | | | | |
| 3 | F | | | | | |
| B | | | | | | |

| REVISIONS | | | | |
|---|---|---|---|---|
| ASSY/PART REV | DOC REV | DESCRIPTION | DATE | APPR |
| XD | | SEE HISTORY | 1-7-15 | |
| | | | | |

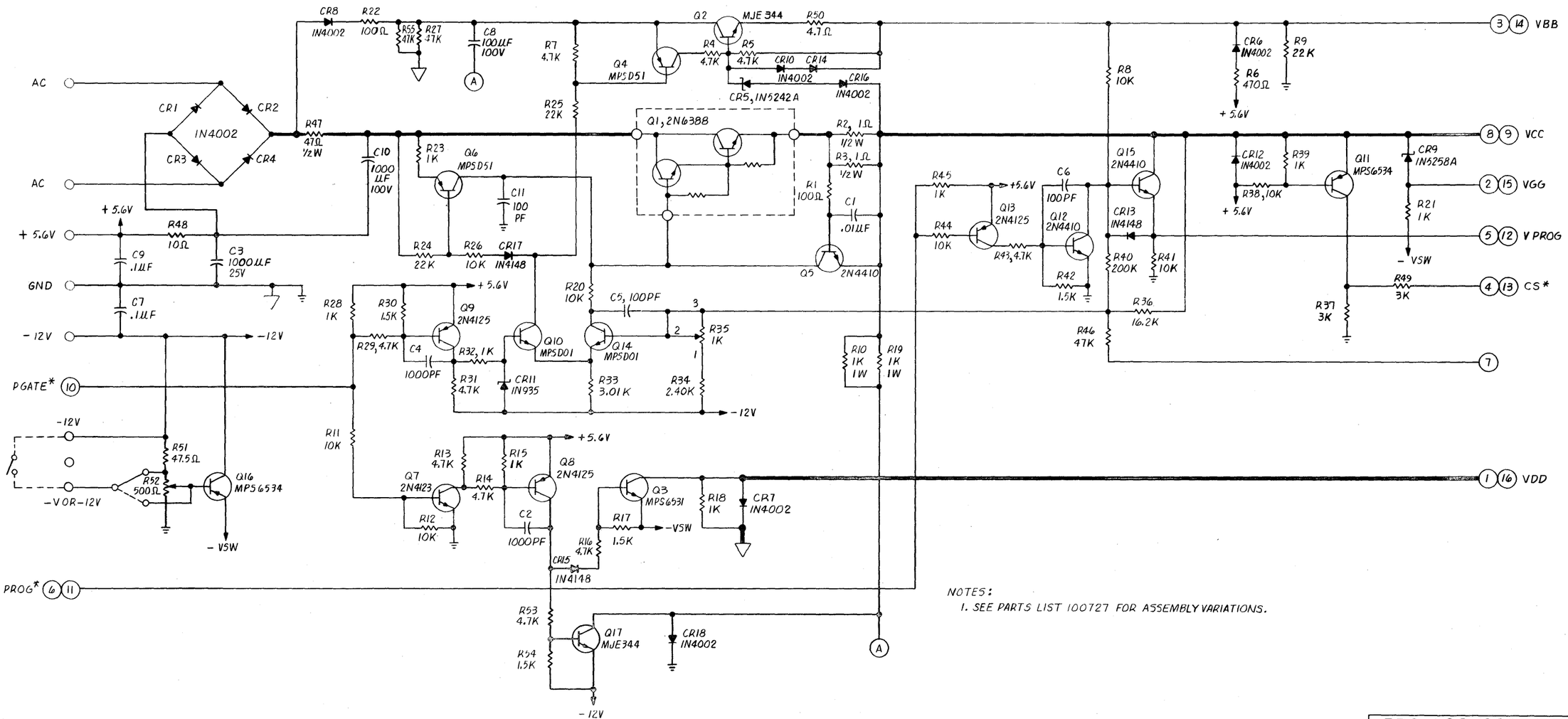


NOTES:
1. SEE PARTS LIST 100727 FOR ASSEMBLY VARIATIONS.

**PRO-LOG CORPORATION**

THIS DOCUMENT CONTAINS PROPRIETARY INFORMATION BELONGING TO PRO-LOG CORPORATION AND SUCH INFORMATION MAY NOT BE DISCLOSED TO OTHERS, REPRODUCED, COPIED OR USED WITHOUT WRITTEN AUTHORITY FROM AN OFFICER OF PRO-LOG CORPORATION.

ASSY, PERSONALITY
REG 1702, 1702A, 5202, 5203

BOB McCOY 8-9-74

D 100724 REV XD SHT 1 OF 1

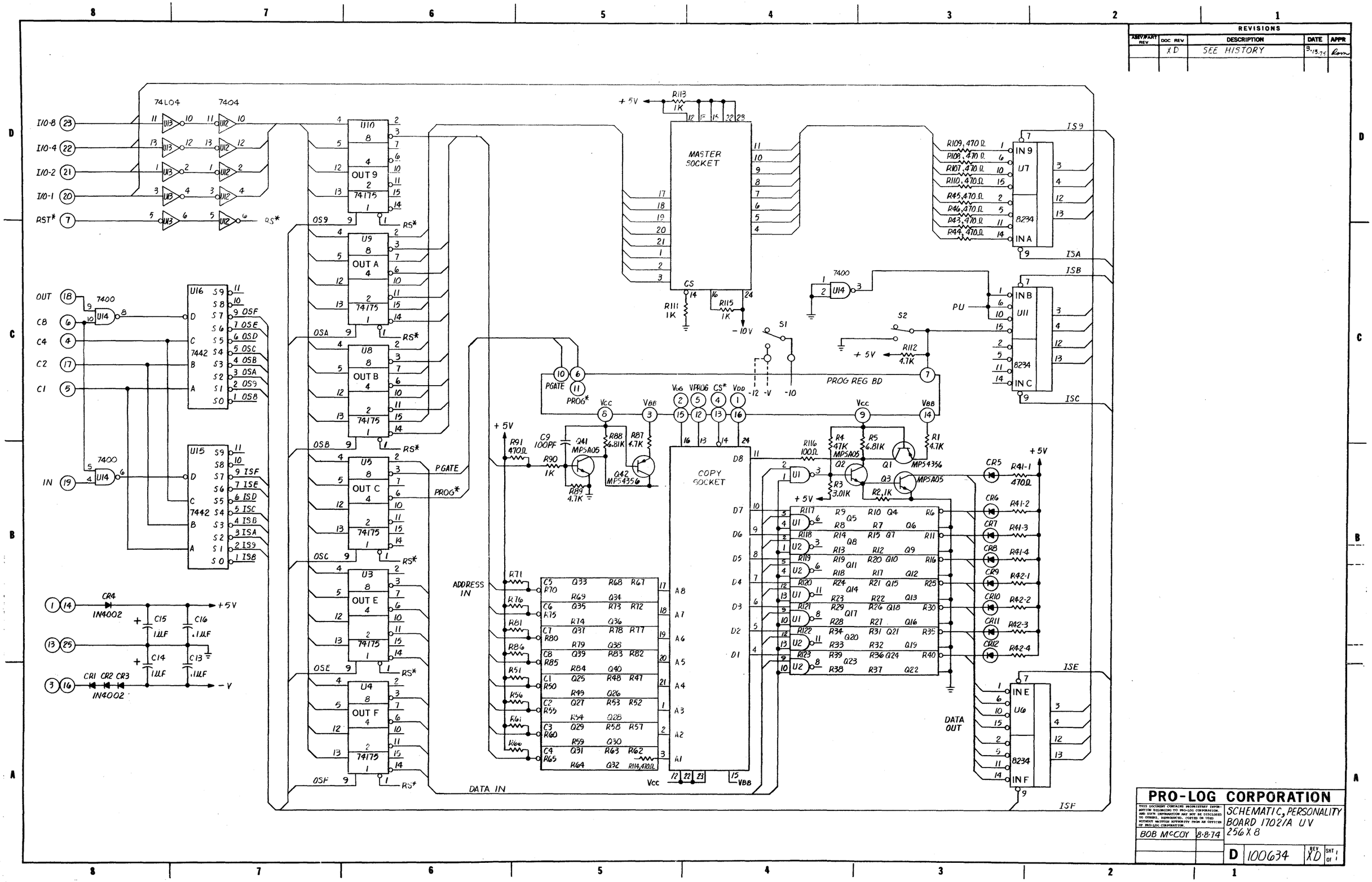


**PRO-LOG CORPORATION**

THIS DOCUMENT CONTAINS PROPRIETARY INFORMATION BELONGING TO PRO-LOG CORPORATION, AND SUCH INFORMATION MAY NOT BE DISCLOSED TO OTHERS, REPRODUCED, COPIED OR USED WITHOUT WRITTEN AUTHORITY FROM AN OFFICER OF PRO-LOG CORPORATION.

SCHEMATIC, PERSONALITY BOARD 1702/A UV 256 X 8

BOB McCOY 8·8·74

D 100634 REV XD SHT 1 OF 1

| REVISIONS | | | | |
|---|---|---|---|---|
| LSI/PART REV. | DOC REV | DESCRIPTION | DATE | APPR |
| | X B | SEE HISTORY | 10-9-74 | |
| | X C | ADDED ASSY TAB. | 11-5-74 | |

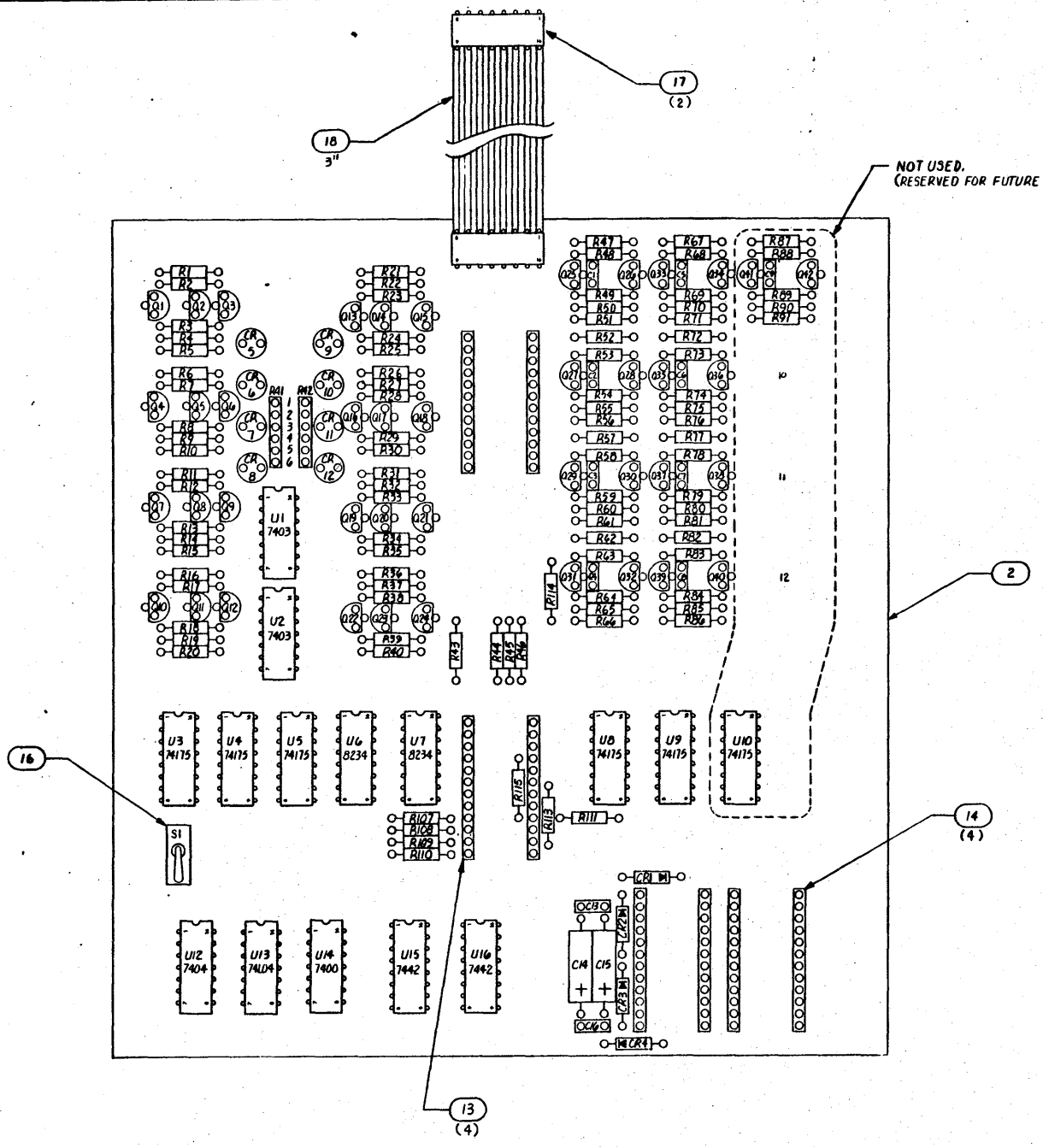


| ASSEMBLY TABULATION | |
|---|---|
| 100633 1702 A | DELETE: Q1,4,7,10,15,18,24,26,28,30,32,34,36 Q38,40, R1,6,11,16,25,30,35,40,41,52,57,62,67,72,77,82 |
| 100800 1702 | DELETE: S1 |
| 100801 5202/3 | ALL PARTS USED |

| ITEM | DESCRIPTION | REF. DESIGNATION |
|---|---|---|
| 33 | 47K CC ¼W | R4,9,14,19,22,27,32,37 |
| 32 | 6.81K MF | R5,10,15,20,21,26,31,36,48,53, 58,63,68,73,78,83 |
| 31 | 4.7K CC | R1,6,11,16,25,30,35,40,47,49,52, 54,57,59,62,64,67,69,72,74,77,79, 82,84, |
| 30 | 3.01K MF | R3,8,13,18,23,28,33,38 |
| 29 | 1K CC | R2,7,12,17,24,29,34,39,50,55,60,65, 70,75,80,85, 86,87,88 |
| 28 | 470Ω CC ¼W | R43,44,45,46,51,56,61,66,71,76,81, 86 ,107,108,109,110,114 |
| 27 | 470Ω NETWORK | R41, R42 |
| 26 | | |
| 25 | MPS A05 TO-92 | Q2,3,5,6,8,9,11,12,13,14,16, 17,19,20,22,23,25,27,29,31, 33,35,37,39 |
| 24 | MPS 4356 TO-92 | Q1,4,7,10,15,18,21,24,26,28,30, 32,34,36,38,40 |
| 23 | IN4002 DO-35 | CR1, 2, 3, 4 |
| 22 | TIL-210 LED | CR5, 6, 7, 8, 9, 10, 11, 12 |
| 21 | 100 PF 200V | C1, 2, 3, 4, 5, 6, 7, 8. |
| 20 | .1μF 50V | C13, C16 |
| 19 | 1μF 25V | C14, C15 |

**PRO-LOG CORPORATION**

THIS DOCUMENT CONTAINS INFORMATION PROPRIETARY TO PRO-LOG CORPORATION AND SUCH INFORMATION MAY NOT BE DISCLOSED OR OTHERWISE FURNISHED, COPIED OR USED WITHOUT WRITTEN APPROVAL FROM AN OFFICER OF PRO-LOG CORPORATION.

ASSY, PERSONALITY BOARD
1702 A UV 256 X 8

BOB MCCOY 8-8-74

D 100633 REV X8 SHT 1 OF 1

| REVISIONS | | | | |
|---|---|---|---|---|
| ASSY/ASSY REV | DOC REV | DESCRIPTION | DATE | APPR |
| XD | | SEE HISTORY | 1-7-75 | |
| | | | | |

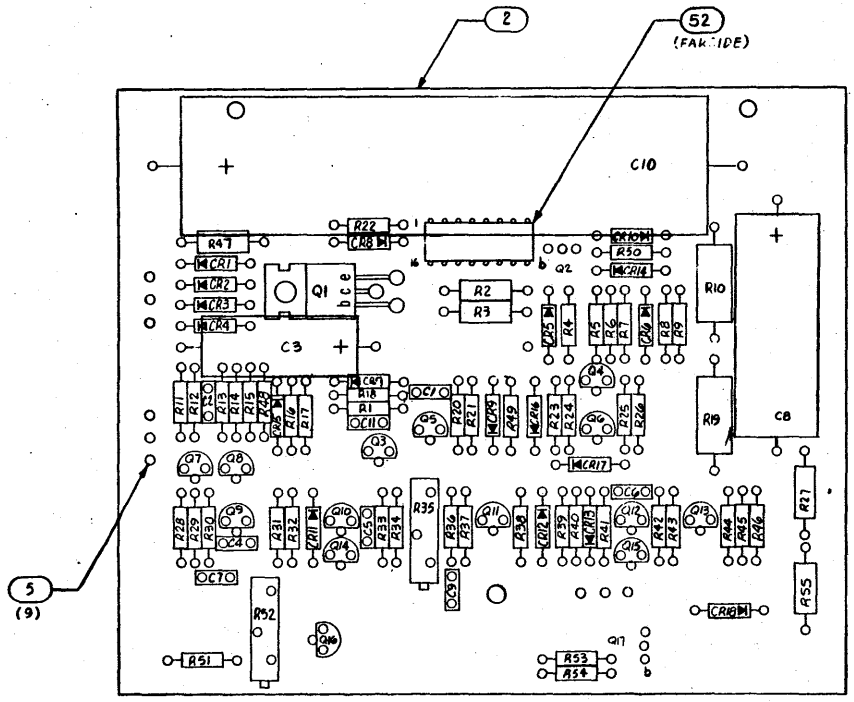


| ITEM | DESCRIPTION | | REF. DESIGNATION |
|---|---|---|---|
| 48 | 47.5Ω MF ¼W | | R51 |
| 47 | 10Ω CC ¼W | | R48 |
| 46 | 47Ω CC ½W | | R47 |
| 45 | 3K CC ¼W | | R37,49 |
| 44 | 1K CC 1W | | R10,19 |
| 43 | 470Ω CC ¼W | | R6 |
| 42 | 4.7Ω CC ¼W | | R50 |
| 41 | 1K POT. | | R35 |
| 40 | 200K CC ¼W | | R40 |
| 39 | 47K CC | | R44,R27,R55 |
| 38 | 22K CC | | R9,R24,R25 |
| 37 | 16.2K MF | | R36 |
| 36 | 10K CC | | R8,11,12,20,26,38,41,44 |
| 35 | 4.7K CC | | R4,5,7,13,14,16,29,31,43,53 |
| 34 | 3.01K MF | | R33 |
| 33 | 2.40K MF | | R34 |
| 32 | 1K CC | | R18,21,23,28,32,39,45,15 |
| 31 | 1.5K MF | | R17,30,42,54 |
| 30 | 100Ω CC ¼W | | R1.22 |
| 29 | 1Ω CC ½W | | R2,3 |
| 28 | 500Ω POT. | | R52 |
| 27 | 1000μF 25V | | C3 |
| 26 | 100μF 140V | | C8 |
| 25 | 1000PF 200V | | C2,C4 |
| 24 | 100PF 200V | | C5,C6,C11 |
| 23 | .01μF 100V | | C1 |
| 22 | .1μF 50V | | C7,C9 |
| 21 | 1000μF 100V | | C10 |
| 20 | IN5258A | DO-7 | CR9 |
| 19 | IN5242A | | CR5 |
| 18 | IN935 | | CR11 |
| 17 | | | |
| 16 | IN4002 | DO-41 | CR1,2,3,4,6,7,8,10,12,14,16,18 |
| 15 | IN4148 | DO-35 | CR13,15,17 |
| 14 | MPSD01 | | Q10,Q14 |
| 13 | MJE 344 | | Q2,Q17 |
| 12 | MPS6534 | TO-92 | Q11,16 |
| 11 | MPSD51 | TO-92 | Q4,Q6 |
| 10 | 2N6388 | | Q1 |
| 9 | MPS6531 | | Q3 |
| 8 | 2N4410 | TO-92 | Q5,Q12,Q15 |
| 7 | 2N4125 | TO-92 | Q5,Q9,Q13 |
| 6 | 2N4123 | TO-92 | Q7 |

FOR 1702A
FOR 1702, 5202, 5203

**PRO-LOG CORPORATION**

ASSY, PERSONALITY REC
1702A

BOB McCOY 8-8-74

D | 10X.727 | REV XD

| REV | DESCRIPTION | DATE | APPR |
|---|---|---|---|
| XD | SEE HISTORY | 3.13.75 | Ron |

| | | |
|---|---|---|
| 100633 | 1702A | ASSY |
| 100800 | 1702 | ASSY |
| 100801 | 5202/3 | ASSY |

THIS DOCUMENT CONTAINS PROPRIETARY INFORMATION BELONGING TO PRO-LOG CORPORATION, AND SUCH INFORMATION MAY NOT BE DISCLOSED TO OTHERS, REPRODUCED, COPIED OR USED WITHOUT WRITTEN AUTHORITY FROM AN OFFICER OF PRO-LOG CORPORATION.

PRO-LOG CORPORATION

BOB MCCOY 8·8·74

ASSY, PERSONALITY BOARD 1702A UV 256X8

| A | 100633 | REV XD | SHT 1 OF 3 |
|---|---|---|---|

# PARTS LIST

| ITEM NO. | PRO-LOG NUMBER | VENDOR PART NO. OR SPEC. NO. | DESCRIPTION | QUANTITY REQ'D ASSY NO. 100633 | ASSY NO. 100800 | ASSY NO. 100801 | ASSY NO. |
|---|---|---|---|---|---|---|---|
| 1 | 100633 | | ASSY, PERSONALITY BD 1702A UV 256X8 | REF | | | |
| 2 | 100632 | | PWB, PERSONALITY BD 1702A UV 256X8 | 1 | 1 | 1 | |
| 3 | 100634 | | SCHEMATIC, PERSONALITY BD 1702A UV 256X8 | REF | REF | REF | |
| 4 | 100800 | | ASSY, PERSONALITY, 1702 UV 256 X 8 | | REF | | |
| 5 | 100801 | | ASSY, PERSONALITY, 5202/3 UV 256 X 8 | | | REF | |
| 6 | | 7400 | IC, TTL GATE POS NAND QUAD 2 INPUT | 1 | 1 | 1 | |
| 7 | | 7403 | IC, TTL GATE POS NAND QUAD 2 INPUT OC | 2 | 2 | 2 | |
| 8 | | 7404 | IC, TTL GATE INVERTER HEX | 1 | 1 | 1 | |
| 9 | | 74L04 | IC, TTL-L GATE INVERTER HEX | 1 | 1 | 1 | |
| 10 | | 7442 | IC, TTL DECODER DCD TO DEC, 1 OF 10 ACT/LO OUT | 2 | 2 | 2 | |
| 11 | | 74175 | IC, TTL QUAD D TYPE FF W/DIRECT CLEAR | 5 | 5 | 5 | |
| 12 | | 8234 | IC, TTL MULTIPLEXER QUAD 2 INPUT OC | 2 | 2 | 2 | |
| 13 | | 2300-12BC5X | SOCKET IC 12 PIN W/WRP 2 LEVEL | 4 | 4 | 4 | |
| 14 | | CSA-3200-12B | SOCKET, IC 12 PIN SIP PC, SOLDER LO/PRO | 4 | 4 | 4 | |
| 15 | | TEX 224-331M | SOCKET, IC 24 PIN DIP PC SOLDER ZIP DIP | 2 | 2 | 2 | |
| 16 | | JBT MPC-121 | SWITCH, TOGGLE | 1 | — | 1 | |
| 17 | | 3416-0000 | CONNECTOR, 3M 16 PIN | 2 | 2 | 2 | |
| 18 | | | CABLE, RIBBON - 16 LEAD, FLAT | 3" | 3" | 3" | |
| 19 | | 25TAL 1.0 | CAPACITOR ALUM 25 V 1uF | 2 | 2 | 2 | |
| 20 | | AVX CK05 BX 104K | CAPACITOR CER 50 V .1uF | 2 | 2 | 2 | |
| 21 | | AVX CK05 BX 101K | CAPACITOR CER 200V 100PF | 8 | 8 | 8 | |

# PARTS LIST

| ITEM NO. | PRO-LOG NUMBER | VENDOR PART NO. OR SPEC. NO. | DESCRIPTION | QUANTITY REQ'D ASSY NO. 100633 | ASSY NO. 100800 | ASSY NO. 100801 | ASSY NO. |
|---|---|---|---|---|---|---|---|
| 22 | | TIL-210 | LED | 8 | 8 | 8 | |
| 23 | | IN4002 | DIODE, RECT 1A 100V DO-41 | 4 | 4 | 4 | |
| 24 | | MPS4356 | TRANSISTOR, PNP 1A 80V GP TO-92 | — | 16 | 16 | |
| 25 | | MPS A05 | TRANSISTOR, NPN 100MA 60V GP TO-92 | 24 | 24 | 24 | |
| 26 | | | RESISTOR, CARB, COMP 1/4W 10% 100Ω | 8 | | | |
| 27 | 100165 | PRO-LOG 100164 | RESISTOR NETWORK, 5R 1/8W 6PIN SIP, 100C 470Ω | 2 | 2 | 2 | |
| 28 | | | RESISTOR, CARB, COMP. 1/4W 10% 470Ω | 17 | 17 | 17 | |
| 29 | | | RESISTOR, CARB, COMP, 1/4W 10% 1K | 19 | 19 | 19 | |
| 30 | | | RESISTOR, METAL FILM 1/4W 1% 3.01K | 8 | 8 | 8 | |
| 31 | | | RESISTOR, CARB. COMP. 1/4W 10% 4.7K | 8 | 24 | 24 | |
| 32 | | | RESISTOR, METAL FILM 1/4W 1% 6.81K | 16 | 16 | 16 | |
| 33 | | | RESISTOR, CARB. COMP. 1/4W 10% 47K | 8 | 8 | 8 | |
| 34 | | | | | | | |
| 35 | | | | | | | |
| 36 | | | | | | | |
| 37 | | | | | | | |
| 38 | | | | | | | |
| 39 | | | | | | | |
| 40 | | | | | | | |
| 41 | | | | | | | |
| 42 | | | | | | | |

PRO-LOG CORPORATION | ASSY, PERSONALITY BD 1702A V256X8 | PL 100633 | XD | SHT 3 OF 3

Form 100088

| REV | DESCRIPTION | DATE | APPR |
|---|---|---|---|
| XD | SEE HISTORY | 1.7.75 | |

100727 PERSONALITY REG FOR 1702A

100728 PERSONALITY REG FOR 1702, 5202, 5203

THIS DOCUMENT CONTAINS PROPRIETARY INFORMATION BELONGING TO PRO-LOG CORPORATION, AND SUCH INFORMATION MAY NOT BE DISCLOSED TO OTHERS, REPRODUCED, COPIED OR USED WITHOUT WRITTEN AUTHORITY FROM AN OFFICER OF PRO-LOG CORPORATION.

BOB McCOY 8.8.74

ASSY, PERSONALITY REG 1702A

**PRO-LOG CORPORATION**

| A | 100727 | REV XD | SHT 1 OF 4 |
|---|---|---|---|

# PARTS LIST

| ITEM NO. | PRO-LOG NUMBER | VENDOR PART NO. OR SPEC. NO. | DESCRIPTION | QUANTITY REQ'D ASSY NO. 100727 | ASSY NO. 100726 | ASSY NO. | ASSY NO. |
|---|---|---|---|---|---|---|---|
| 1 | 100727 | | ASSY, PERSONALITY REG 1702A | REF | — | | |
| 2 | 100726 | | PWB, PERSONALITY REG 1702, 1702A, 5202, 5203 | 1 | 1 | | |
| 3 | 100724 | | SCHEMATIC, PERSONALITY REG 1702, 1702A, 5202, 5203 | REF | REF | | |
| 4 | 100728 | | ASSY, PERSONALITY REG 1702, 5202, 5203 | — | REF | | |
| 5 | | AMP 9-350362-1 | CONNECTOR PIN | 9 | 9 | | |
| 6 | | 2N4123 | TRANSISTOR, NPN 200MA 30V GP TO-92 | 1 | 1 | | |
| 7 | | 2N4125 | , PNP 200MA 30V GP TO-92 | 3 | 3 | | |
| 8 | | 2N4410 | , NPN TO-92 | 3 | 3 | | |
| 9 | | MPS6531 | , NPN | 1 | 1 | | |
| 10 | | 2N6388 | , NPN | 1 | 1 | | |
| 11 | | MPSD51 | , PNP 1A 80V GP TO-92 | 2 | 2 | | |
| 12 | | MPS6534 | TRANSISTOR, PNP 600MA 40V GP TO-92 | 2 | 2 | | |
| 13 | | MJE344 | TRANSISTOR NPN | 2 | 2 | | |
| 14 | | MPSD01 | TRANSISTOR NPN | 2 | 2 | | |
| 15 | | IN4148 | DIODE, 10MA 75V SIG DO-35 | 3 | 3 | | |
| 16 | | IN4002 | , RECT 1A 100V DO-41 | 12 | 12 | | |
| 17 | | | | | | | |
| 18 | | IN935 | , ZENER | 1 | 1 | | |
| 19 | | IN5242A | , ZENER 12V | 1 | 1 | | |
| 20 | | IN5258A | DIODE, ZENER 36V DO-7 | 1 | 1 | | |
| 21 | | | CAPACITOR, ALUM 100V 1000uF | 1 | 1 | | |

| PRO-LOG CORPORATION | ASSY, PERSONALITY REG 1702A | PL 100727 | XD | SHT 2 OF 4 |
|---|---|---|---|---|

Form 100088

# PARTS LIST

| ITEM NO. | PRO-LOG NUMBER | VENDOR PART NO. OR SPEC. NO. | DESCRIPTION | QUANTITY REQ'D ASSY NO. 100727 | ASSY NO. 100728 | ASSY NO. | ASSY NO. |
|---|---|---|---|---|---|---|---|
| 22 | | AVXCK05BX104K | CAPACITOR, CER 50V 10% .1uF | 3 | 3 | | |
| 23 | | AVXCK05BX103K | CAPACITOR, CER 100V 10% .01uF | 1 | 1 | | |
| 24 | | AVXCK05BX101K | CAPACITOR, CER 200V 10% 100 PF | 3 | 3 | | |
| 25 | | AVXCK05BX102K | CAPACITOR, CER 200V 10% 1000PF | 2 | 2 | | |
| 26 | | GE 93F9829AA9 | CAPACITOR, ALUM 140V 100uF | 2 | 2 | | |
| 27 | | | CAPACITOR, ALUM 25V 1000uF | 1 | 1 | | |
| 28 | | | RESISTOR, POT. 15T 10% CERMET 500Ω | 1 | 1 | | |
| 29 | | | " CARB COMP ½W 10% 1Ω | 1 | 2 | | |
| 30 | | | " CARB COMP ¼W 10% 100Ω | 2 | 2 | | |
| 31 | | | " METAL FILM ¼W 1% 1.5K | 4 | 4 | | |
| 32 | | | " CARB COMP ¼W 10% 1K | 8 | 8 | | |
| 33 | | | " METAL FILM ¼W 1% 2.40K | 1 | 1 | | |
| 34 | | | " METAL FILM ¼W 1% 3.01K | 2 | 2 | | |
| 35 | | | " CARB COMP ¼W 10% 4.7K | 10 | 10 | | |
| 36 | | | " CARB COMP ¼W 10% 10K | 8 | 8 | | |
| 37 | | | " METAL FILM ¼W 10% 16.2K | 1 | 1 | | |
| 38 | | | " CARB COMP ¼W 10% 22K | 3 | 3 | | |
| 39 | | | " CARB COMP ¼W 10% 47K | 3 | 3 | | |
| 40 | | | RESISTOR, CARB COMP ¼W 10% 200K | 1 | 1 | | |
| 41 | | | RESISTOR, POT. 15T 10% CERMET 1K | 1 | 1 | | |
| 42 | | | RESISTOR, CARBON COMP ¼W 10% 4.7Ω | 1 | 1 | | |