IDENTIFICATION: Basic Utility Package IV

AUTHOR: A. W. England, SDS

ACCEPTED: 23 November 1962

COMPUTER CONFIGURATION: All 920 Systems and any 910 with typewriter.

PURPOSE: To provide a simple utility system for the SDS 910 and 920 when a more elaborate system is not required or when memory space is limited.

PROGRAMMED OPERATORS: None

STORAGE: The program occupies 288 words.

TIMING: All operations proceed at the rate of the I/O device being used. This is 15 character/sec on the typewriter, 300 characters/sec from paper tape in the photoreader and 60 characters/sec on paper tape from the punch.

USE:

1. LOADING THE PROGRAM

The system tape is in a relocatable format with a relocating bootstrap at the beginning. To load this tape, insert it in the photoreader and enter the desired starting location in the A register. Then follow the normal fill procedure. The relocating bootstrap loads into the first 32 words of memory and then loads the system program starting at the address given in the A register. When the tape is loaded, control is transferred to the program and it will address the keyboard for operational control.

2. OPERATION CONTROL CODES

All characters read by the system from the keyboard or paper tape are handled in the same manner. Digits are accumulated until a control code is read and then operated upon. There follows a description of the operations caused by the various control codes.

2.1 Set Location * (asterisk), L (letter L)

The character * will be the standard set location symbol for the HELP system but the L character is allowed for compatibility with earlier systems. This character causes the previously entered five octal digits (14 bits) to be placed in

USE: (Cont.) the location counter. The contents of the accumulate and hold words are set to zero and all flags are reset. This operation is used to set the location for loading, outputing or branching. The location setting is in the X register when the program is waiting for an input. It may be inspected by moving the compute switch to IDLE, typing a character (CR for instance) and looking in X. Move the switch to RUN before typing any further characters.

2.2 Enter Information . (period),) (right parenthesis), ⌑ (lozenge)

On reading the enter symbol the program will form the word defined by the previously read characters and store it in memory in the location specified by the contents of the location counter. It then increments the location counter by 1 and clears the input accumulating words. A further description of the word formation will be found under the sections on indirect and relative addressing. The symbol right parentheses,), or lozenge, ⌑ , is the standard symbol for enter. Only one of these will be present on any given input preparation device and the code is the same.

2.3 Set Location to Register A, ' (apostrophe), @ (at)

The address of the temporary storage location for A is loaded into the location counter. This operation is the same as set location except that the location set is always the address of the A temporary storage word. When this code has been entered the operator can load information into the temporary A, B, and X locations in that order, by simply inputing words in the normal manner followed by the enter symbol. When either branch operation is performed to leave the system the contents of these three words are loaded into their respective registers before the branch is executed.

2.4 Step Location $ (dollar sign)

The $ causes the location counter to be incremented by one without storing anything in memory. It also clears and resets like the carriage return.

2.5 Start Compute at Location, J (letter J), # (hash mark), or = (equal sign)

The registers are loaded with the contents of the temporary A, B and X locations and the program executes a BRU to the location specified by the location counter. The # or = is the HELP symbol for start compute.

USE: (Cont.)

2.6 Enter Subroutine at Location, , (comma)

The contents of the temporary A, B, and X are loaded into the respective registers and a BRM is executed to the location specified by the contents of the location counter. This operation is used for entering subroutines and routines which end with a BRR. If control returns with a BRR to the system the instruction following the BRM will transfer control back to the keyboard input section.

2.7 Fill from Reader, F (letter F), : (colon)

This will cause the photoreader to be started and information will be loaded from paper tape. The format is as described for typewriter. The : (colon) is the HELP code for fill, the letter F is allowed for compatibility with earlier systems.

2.7.1 Verifying Mode, V (letter V)

This will cause the photoreader to be started and information read from paper tape as in the fill mode. However, the information from tape is not loaded but is compared with the contents of the specified memory locations. If it agrees, operation continues as usual. If it does not agree, the input stops. The A register contains the word as it was on tape, the B register contains the contents of the corresponding memory location and X contains the address of the memory location. When the halt is cleared the system will continue in the verify mode if BP 2 is set. If it is reset, control will be returned to the keyboard.

2.8 Return to Keyboard, / (slash mark)

The slash is used to indicate the end of information on paper tape and will cause an unconditional return to keyboard control. The reader is stopped.

2.9 Stop Code, ‡ (group mark)

The Flexowriter stop code or the character ‡ which have the same code, can be used to stop input and return control to the keyboard if BP 4 is set. If it is reset this code is ignored.

2.10 Indirect Addressing, I (letter I)

After the tag digit and the two octal digit instruction code has been read, an I may be used to set the indirect address bit in an instruction word. When this character is read the previous 9 bits are moved to the left of the word and bit 9 is set to a one. This word is placed in Hold and the accumulating word set to zero. Additional octal digits are stored in the accumulating word and when the enter symbol is read they are merged with the Hold word and the result stored in memory at the location specified. The indirect address bit will also be set if a five digit absolute address greater than 40000 octal is read.

USE: (Cont.) 2.11 Relative Addressing, + (plus) or & (ampersand) and - (minus)

If after the tag digit, the two instruction code digits, and possibly the I code are read, a sign symbol is read, the previous digits and tags will be moved to the left and placed in Hold. The relative address tag, bit 0, will be set to one and the relative flag will be set. The accumulating word will be set to zero and each successive digit will be stored in this word until the enter symbol is encountered. The accumulated number is then added to the contents of the location counter if the sign was positive, + or &, or subtracted from the contents of the location counter if the sign was negative. This resultant address is merged with the contents of the Hold word and stored in memory at the address specified by the location counter. When giving a relative address it is not necessary to use leading zeros. The signed address field causes the resultant instruction word to be made negative regardless of whether or not the tag digit was 4 or greater. However, a tag digit of 4 or greater will not cause relative addressing on input but can be used to indicate that a word should be relativized on output.

2.12 Clear and Reset, Carriage Return, CR

The carriage return causes the accumulating and holding registers to be set to zero and all flags to be reset. The location counter is not affeced.

2.13 Ignored Codes TB, SP, DL, BS

The codes for tabulate, space, backspace, and code delete are unconditionally ignored whenever read.

2.14 Output Operations

2.14.1 Output on the typewriter or punch is allowed in this utility system. In the HELP system output will be a separate module from the input routine. The output of this routine is in the same general format as that of the HELP system. Output is started by setting the location of the first word to be output using the set location operation. If output is to be stopped automatically, the ending address is then entered followed by a T for typewriter output or P for punch. The routine will then output from the first address through the ending address or until BP 1 is set. If no ending address is given, zero will be used and output will normally be terminated on BP 1 set.

USE: (Cont.) 2.14.2 The format is the same for either typewriter or punch and it can be set for either octal mode or instruction mode. The output begins with a carriage return followed by the five digit starting address and an *. Each word is output preceded by a tab and followed by a ⊓ or) and a carriage return. Whenever a location ending with an octal zero is encountered it is output before the tab. When output is terminated, a / will be output after the last carriage return.

2.14.2.1 BP 2 reset indicates octal mode. In this mode each word is output as eight octal digits.

2.14.2.2 BP 2 set indicates instruction mode. In this mode each word is output in the following manner:

T CDI±AAAAA

Where T indicates the three tag bits, relative, index and program operator, as one octal digit. This is followed by a space and then two octal digits for the instruction code, CD. If the addressing is indirect an I will be output after CD or a space if addressing is direct. If the address is relative, tag digit equal to 4 or greater, and BP 4 is set, the contents of the location counter are subtracted from the address portion of the instruction and the result is output as a sign and five digits of absolute value. If the addressing is non relative, tag digit less than 4, or if BP 4 is reset the sign position will be spaced over and the address output as five octal digits.

3. EXAMPLES

3.1 To load the octal number, 01234567 in location 347:

00347*01234567. CR

3.2 To load an instruction to add a word whose address is in a word 4 previous to the instruction itself which is at 7046:

07046*55I-4)CR

In memory this would appear as 45547042. If an instruction mode typeout were called for it would appear as:

07046* 4 55I-00004)CR

when BP 4 is set and as:

07046* 4 55I 07042)CR

when BP 4 is reset.

USE: (Cont.) 3.3 To initiate the punchout of words 542 through 556:

00542*00556P

4. RECOVERY OF PROGRAM CONTROL

If control is taken from the system and the operator wishes to return to the system using console operation there are two methods:

4.1 If location 0001 has not been destroyed by some other program operation then control can always be recovered by the following procedure:

a. Move COMPUTE switch to IDLE.

b. Press START button.

c. STEP COMPUTE switch.

d. Move COMPUTE switch to RUN.

4.2 If location 0001 has been destroyed control can be recovered by inserting in the C register and executing a BRU to the address originally entered into A when the system was loaded. After this location 0001 will be restored and control will go to the system which will then address the keyboard.

5. SUMMARY OF OPERATIONS

OPERATION	CODE
Set location	* L
Enter word and advance location counter	¤) .
Set location to register A	' @
Step location	$
Start compute at location	J # =
Enter subroutine at location	,
Fill from photoreader	F :
Verify from photoreader	V
Stop fill or verify and return to keyboard	/
" " " " " " " " BP 4 SET	≠ (SC)

USE: (Cont.)

OPERATION		CODE
Set tag field for program operator	First Digit	1
Set tag field for index	First Digit	2
Set tag field for program operator and index	First Digit	3
Set tag field for relative addressing	First Digit	4
Set tag field for program operator and relative addressing	First Digit	5
Set tag field for index and relative addressing	First Digit	6
Set tag field for program operator, index, and relative addressing	First Digit	7
Set indirect address tag		I
Set relative forward		+&
Set relative backward		-
Start typeout octal format BP 2 RESET		T
Start Typeout absolute instruction format, BP 2 SET, BP 4 RESET		T
Start Typeout relative instruction format, BP 2 SET, BP 4 SET		T
Start punch octal format, BP 2 RESET		P
Start punch absolute instruction format, BP 2 SET, BP 4 RESET		P
Start punch relative instruction format, BP 2 SET, BP 4 SET		P
Clear and reset		CR
Ignore		TB
Ignore		SP
Ignore		BS
Ignore		DL

METHOD:

Each digit or character is read into memory. A table search is then performed to determine if this code is a special or control code. If it is, then a transfer of control is made to the beginning of the approrpriate control routine. If it is not found in the table it is assumed to be an octal digit and the least significant three bits are shifted into the right end of an accumulating word. Whenever a control code is encountered which uses previous data it picks this up from the accumulated word.

In the process of inputing an instruction the tag and instruction code are accumulated as three octal digits and then if an I is input it causes the contents of the accumulated word to be transferred to the hold word and shifted to the left end of the word. Bit 9 of this hold word is then set to a one and a hold flag is set. A plus or minus sign will cause a similar operation. If the hold flag is reset when the sign is encountered the accumulated word is shifted and transferred to hold and a relative flag as well as the hold flag, is set. If the hold flag was set when the sign was encountered only the relative flag is set. In either case bit 0 of the hold word is then set to one.

Additional digits are now accumulated until the enter symbol is encountered. If the hold flag were reset the contents of the accumulated word would be stored at the address specified by the location counter. However, if the hold flag is set and the relative flag reset the lower 14 bits of the accumulated word are merged with the contents of hold and then stored. When the hold is set and the relative flag is set the contents of the accumulated word are added or subtracted, depending on the sign that set the relative flag, to the location counter and the result merged with the contents of hold. After this the word is stored, all flags are reset, hold and accumulate are cleared, and the location counter is incremented by one.

In the case of the output operations the starting address is in the location counter and the ending address in the accumulated word. Since the set location operation clears the accumulated word the ending address will be zero if no other address is input. The output proceeds to increment the location counter after each word is output and compares it to the accumulated word. When they agree it terminates output and returns control to the input section.

SCIENTIFIC DATA SYSTEMS

SCIENTIFIC DATA SYSTEMS

SDS 900 SERIES PROGRAM LISTING

PROBLEM: BASIC UTILITY PACKAGE IV

Catalog No. ØØØØ11

PROGRAMMER: A. W. ENGLAND, SDS

DATE 11-23-62

LOCATION	INSTRUCTION	REMARKS
Ø213Ø	Ø EOM ØØØØØ	START CLW
Ø2131	Ø EOM 2ØØØ4	DIR
Ø2132	Ø CLR 3ØØØ3	
Ø2133	4 STA Ø2326	CLEAR ACCUM
Ø2134	4 STA Ø2327	CLEAR HOLD
Ø2135	4 STA Ø255Ø	RESET FLAG 1
Ø2136	4 LDA Ø256Ø	R1; SET SW1 FOR KEYBOARD EOM
Ø2137	4 STA Ø2152	*
Ø214Ø	4 LDA Ø2563	R4; SET SW2 FOR KEYBOARD WIM
Ø2141	4 STA Ø2154	*
Ø2142	4 LDA Ø2165	R9; SET SW3 TO NOP
Ø2143	4 STA Ø2156	*
Ø2144	4 LDA Ø2266	SET UP RESTART
Ø2145	Ø STA ØØØØ1	*
Ø2146	4 LDA Ø2323	R1Ø; RESET SW5 FOR LOAD
Ø2147	4 STA Ø2224	*
Ø215Ø	Ø SKS 21ØØØ	READY SKBRW; WAIT FOR READY
Ø2151	4 BRU Ø215Ø	*
Ø2152	Ø EOM Ø1ØØ1	SW1 ADDRESS INPUT DEVICE
Ø2153	4 LDX Ø2325	LOC; FOR DISPLAY

SCIENTIFIC DATA SYSTEMS

SDS 900 SERIES PROGRAM LISTING

PROBLEM: BASIC UTILITY PACKAGE IV

Catalog No. ØØØØ11

PROGRAMMER: A. W. ENGLAND, SDS

DATE 11-23-62

LOCATION	INSTRUCTION		REMARKS	
Ø2154	4 WIM	Ø2554	SW2	T1; INPUT
Ø2155	4 LDB	Ø2554		T1
Ø2156	Ø NOP	ØØØØØ	SW3	NOT USED
Ø2157	Ø RCY	2ØØ11		SET UP TO SCAN LIST
Ø216Ø	4 LDB	Ø253Ø		*
Ø2161	4 LDX	Ø2537		*
Ø2162	6 SKM	Ø2527		SCAN CONTROL LIST
Ø2163	4 BRX	Ø2162		*
Ø2164	6 BRUI	Ø2527		GO TO CONTROL SECTION
Ø2165	Ø NOP	ØØØØØ	R9	
Ø2166	Ø LDA	ØØØ25	IDA	SC3; INDIRECT ADDRESS
Ø2167	4 BRU	Ø22Ø5		SIGN +3
Ø217Ø	Ø LSH	ØØØØ6	DIGIT	SHIFT OCTAL DIGIT INTO ACCUM
Ø2171	4 LDB	Ø2326		ACCUM; *
Ø2172	Ø LCY	2ØØØ3		*
Ø2173	4 STB	Ø2326		ACCUM; *
Ø2174	4 BRU	Ø2152		SW1+1
Ø2175	4 LDA	Ø2326	LOCSET	ACCUM; LOCATION SET
Ø2176	Ø ETR	ØØØ27		SAVE ADDRESS PART
Ø2177	4 STA	Ø2325		LOC

SCIENTIFIC DATA SYSTEMS

SCIENTIFIC DATA SYSTEMS

SDS 900 SERIES PROGRAM LISTING

PROBLEM: BASIC UTILITY PACKAGE IV

Catalog No. ØØØØ11

PROGRAMMER: A. W. ENGLAND, SDS

DATE 11-23-62

LOCATION	INSTRUCTION		REMARKS
Ø22ØØ	Ø CLR	3ØØØ3	
Ø22Ø1	4 BRU	Ø2173	DIGIT+3
Ø22Ø2	4 SKA	Ø255Ø	SIGN FLAG1; HAS I CODE BEEN READ?
Ø22Ø3	4 BRU	Ø2321	FMP; YES
Ø22Ø4	Ø ABC	2ØØØ5	; NO, CLB
Ø22Ø5	4 STB	Ø255Ø	FLAG
Ø22Ø6	4 LDB	Ø2326	ACCUM; MOVE [ACCUM] TO HOLD
Ø22Ø7	Ø LCY	2ØØ17	15; *
Ø221Ø	4 STB	Ø2327	HOLD; *
Ø2211	4 BRU	Ø22ØØ	LOCSET+3
Ø2212	4 LDA	Ø2531	ENTER C2
Ø2213	4 SKA	Ø255Ø	FLAG1; I CODE ONLY?
Ø2214	4 BRU	Ø2236	FORM; YES
Ø2215	Ø LSH	ØØØØ1	; NO
Ø2216	4 SKA	Ø255Ø	FLAG1; + CODE?
Ø2217	4 BRU	Ø2234	ADD; YES
Ø222Ø	Ø LSH	ØØØØ1	; NO
Ø2221	4 SKA	Ø255Ø	FLAG1; - CODE?
Ø2222	4 BRU	Ø2232	SUB; YES
Ø2223	4 LDA	Ø2326	ACCUM; NO

SCIENTIFIC DATA SYSTEMS

SCIENTIFIC DATA SYSTEMS

SDS 900 SERIES PROGRAM LISTING

PROBLEM: BASIC UTILITY PACKAGE IV

Catalog No. ØØØØ11

PROGRAMMER: A. W. ENGLAND, SDS

DATE 11-23-62

LOCATION	INSTRUCTION	REMARKS
Ø2224	4 STAI Ø2325	SW5 LOC; LOAD/VERIFY SWITCH
Ø2225	4 MIN Ø2325	LOC
Ø2226	Ø CLR 3ØØØ3	RESET
Ø2227	4 STA Ø255Ø	FLAG1
Ø223Ø	4 STA Ø2327	HOLD
Ø2231	4 BRU Ø22Ø1	LOCSET+4
Ø2232	4 SUB Ø2326	SUB ACCUM; -LOC
Ø2233	Ø LSH ØØØØ1	MUL BY 2; -2LOC
Ø2234	4 ADD Ø2325	ADD LOC; +LOC
Ø2235	Ø MRG ØØØ25	SC3; SET RELOCATABLE TAG
Ø2236	4 ADD Ø2326	FORM ACCUM
Ø2237	4 MRG Ø2535	C6; SAVE ADDRESS AND TAG
Ø224Ø	4 EOR Ø2535	C6; *
Ø2241	4 MRG Ø2327	HOLD
Ø2242	4 BRU Ø2224	SW5
Ø2243	Ø EOM ØØØØØ	FILL CLW; FILL FROM TAPE OPERATION
Ø2244	4 LDX Ø2323	R1Ø; FOR LOAD
Ø2245	4 LDB Ø2561	R2; FOR READER WIM
Ø2246	4 LDA Ø2522	R12; FOR READER EOM
Ø2247	4 STX Ø2224	SW5;

SCIENTIFIC DATA SYSTEMS

SCIENTIFIC DATA SYSTEMS

SDS 900 SERIES PROGRAM LISTING

PROBLEM: BASIC UTILITY PACKAGE IV

Catalog No. ØØØØ11

PROGRAMMER: A. W. ENGLAND, SDS

DATE 11-23-62

LOCATION	INSTRUCTION	REMARKS
Ø2250	4 STA Ø2152	SW1
Ø2251	4 STB Ø2154	SW2
Ø2252	4 BRU Ø2150	READY
Ø2253	Ø EOM ØØØØØ	VERSET CLW; VERIFY FROM TAPE OPERATION
Ø2254	4 LDX Ø2324	R11; FOR VERIFY
Ø2255	4 BRU Ø2245	FILL +2
Ø2256	4 BRU Ø2150	UNUSED
Ø2257	Ø EOM ØØØØØ	
Ø2260	4 LDA Ø2522	
Ø2261	Ø SKS 2Ø4ØØ	
Ø2262	4 LDA Ø2564	
Ø2263	4 LDB Ø2561	
Ø2264	4 BRU Ø2250	
Ø2265	Ø SKS 2ØØ4Ø	STOP BP4
Ø2266	4 BRU Ø2130	START; BP4 SET STOP INPUT
Ø2267	4 BRU Ø2152	SW1; CONTINUE INPUT
Ø2270	4 LDA Ø2275	AT ADDRA; SET LOCATION TO A
Ø2271	4 BRU Ø2176	LOCSET+1
Ø2272	Ø LSH ØØØØ6	SUBR MAKE B NEGATIVE
Ø2273	Ø EOM ØØØØØ	JUMP CLW

SCIENTIFIC DATA SYSTEMS

SCIENTIFIC DATA SYSTEMS

SDS 900 SERIES PROGRAM LISTING

PROBLEM: BASIC UTILITY PACKAGE IV

Catalog No. ØØØØ11

PROGRAMMER: A. W. ENGLAND, SDS

DATE 11-23-62

LOCATION	INSTRUCTION	REMARKS
Ø2274	4 STB Ø2555	T2
Ø2275	4 LDA Ø2551	ADDRA A
Ø2276	4 LDB Ø2552	A+1
Ø2277	4 LDX Ø2553	A+2
Ø23ØØ	4 SKN Ø2555	T2
Ø23Ø1	4 BRUI Ø2325	LOC; START COMPUTE
Ø23Ø2	4 BRMI Ø2325	LOC; START SUBROUTINE
Ø23Ø3	4 BRU Ø213Ø	START; SUBROUTINE RETURN
Ø23Ø4	Ø LDB ØØØ26	VERIFY SC4; ALL 1S
Ø23Ø5	4 SKMI Ø2325	LOC;
Ø23Ø6	4 BRU Ø231Ø	+2; NON COMPARE
Ø23Ø7	4 BRU Ø2225	SW5+1; COMPARE
Ø231Ø	Ø EOM ØØØØØ	CLW
Ø2311	4 LDBI Ø2325	LOC; BRING WORD FROM MEMORY
Ø2312	4 LDX Ø2325	LOC
Ø2313	Ø HLT Ø2ØØØ	K1 VERIFY HLT
Ø2314	Ø SKS 2Ø2ØØ	BP2
Ø2315	4 BRU Ø2317	+2; SET, CONTINUE TO VERIFY
Ø2316	4 BRU Ø213Ø	START; RESET, RETURN TO KEYBOARD
Ø2317	4 MIN Ø2325	LOC

SCIENTIFIC DATA SYSTEMS

SCIENTIFIC DATA SYSTEMS

SDS 900 SERIES PROGRAM LISTING

PROBLEM: BASIC UTILITY PACKAGE IV

Catalog No. ØØØØ11

PROGRAMMER: A. W. ENGLAND, SDS

DATE 11-23-62

LOCATION	INSTRUCTION			REMARKS	
Ø232Ø	4	BRU	Ø215Ø		READY
Ø2321	4	STA	Ø255Ø	FPM	FLAG1
Ø2322	4	BRU	Ø22ØØ		SETLOC+3
Ø2323	4	STAI	Ø2325	R1Ø	LOC
Ø2324	4	BRU	Ø23Ø4	R11	VERIFY
Ø2325	Ø	HLT	ØØ1ØØ	LOC	
Ø2326	Ø	HLT	ØØØØØ	ACCUM	
Ø2327	Ø	HLT	ØØØØØ	HOLD	
Ø233Ø	4	LDA	Ø2567	TYPE	R8; START OF TYPE ROUTINE
Ø2331	Ø	EOM	Ø3Ø41		TYPE
Ø2332	4	BRU	Ø2335		PUNCH+2
Ø2333	4	LDA	Ø2566	PUNCH	R7; START OF PUNCH ROUTINE
Ø2334	Ø	EOM	Ø1Ø44		PUNCH
Ø2335	4	STA	Ø24Ø6		SW4; SET UP OUTPUT INSTRUCTION
Ø2336	4	LDB	Ø254Ø		CRCHAR
Ø2337	4	BRM	Ø24Ø4		SW4-2; OUTPUT CR
Ø234Ø	4	LDB	Ø2325		LOC; SET UP FOR OUTPUT OF LOCATION
Ø2341	4	LDA	Ø2536		FIVE; *
Ø2342	Ø	LSH	ØØØ11		9; *
Ø2343	4	BRM	Ø241Ø		OUT; TO OUTPUT LOCATION

SCIENTIFIC DATA SYSTEMS

SCIENTIFIC DATA SYSTEMS

SDS 900 SERIES PROGRAM LISTING

PROBLEM: BASIC UTILITY PACKAGE IV

Catalog No. ØØØØ11

PROGRAMMER: A. W. ENGLAND, SDS

DATE 11-23-62

LOCATION	INSTRUCTION	REMARKS
Ø2344	4 LDB Ø2472	*CHAR; OUTPUT SETLOC CHARACTER
Ø2345	4 BRM Ø24Ø4	SW4-2; *
Ø2346	4 LDB Ø2542	NEXTWD TBCHAR; OUTPUT TAB CHARACTER
Ø2347	4 BRM Ø24Ø4	SW4-2; *
Ø235Ø	4 LDB Ø2466	EIGHT; FOR OCTAL FORMAT
Ø2351	Ø SKS 2Ø2ØØ	BP2; TEST FOR FORMAT DESIRED
Ø2352	4 LDB Ø2467	INST; FORM INSTRUCTION FORMAT
Ø2353	Ø RCY 2ØØ27	23; PUT MASK IN A
Ø2354	4 LDBI Ø2325	LOC; BRING WORD AT LOCATION TO B
Ø2355	4 BRM Ø241Ø	OUT
Ø2356	4 LDB Ø2543	¤CHAR; OUTPUT TERMINATION CHARACTER
Ø2357	4 BRM Ø24Ø4	SW4-2; *
Ø236Ø	4 LDB Ø254Ø	CRCHAR; OUTPUT CR
Ø2361	4 BRM Ø24Ø4	SW4-2; *
Ø2362	Ø LDB ØØØ27	SC5
Ø2363	4 LDA Ø2325	LOC
Ø2364	4 SKM Ø2326	ACCUM; CHECK FOR END
Ø2365	Ø SKS 2Ø4ØØ	BP1; NOT END
Ø2366	4 BRU Ø2376	DONE; END OR BP1 SET
Ø2367	Ø ADD ØØØ24	SC2; INCREMENTS LOC

SCIENTIFIC DATA SYSTEMS

SCIENTIFIC DATA SYSTEMS

SDS 900 SERIES PROGRAM LISTING

PROBLEM: BASIC UTILITY PACKAGE IV

Catalog No. ØØØØ11

PROGRAMMER: A. W. ENGLAND, SDS

DATE 11-23-62

LOCATION	INSTRUCTION	REMARKS
Ø237Ø	4 STA Ø2325	LOC
Ø2371	4 SKA Ø2532	C3; IS LOC AN EVEN EIGHTH
Ø2372	4 BRU Ø2346	NEXTWD; NO
Ø2373	4 LDB Ø2536	FIVE; YES
Ø2374	Ø RCY 2ØØ17	15; SET UP TO OUTPUT LOC
Ø2375	4 BRU Ø2343	P+8
Ø2376	4 LDB Ø2541	DONE /CHAR
Ø2377	4 BRM Ø24Ø4	SW4-2
Ø24ØØ	Ø EOM 14ØØØ	TOPW; TERMINATE OUTPUT
Ø24Ø1	Ø SKS 21ØØØ	BRW; BUFFER READY
Ø24Ø2	4 BRU Ø24Ø1	-1; NO
Ø24Ø3	4 BRU Ø22ØØ	SETLOC+3; YES
Ø24Ø4	4 HLT Ø2377	SW4-2
Ø24Ø5	4 STB Ø2554	T1; STORE OUTPUT CHARACTER
Ø24Ø6	4 MIW Ø2554	SW4 T1; OUTPUT THE CHARACTER
Ø24Ø7	4 BRR Ø24Ø4	-3
Ø241Ø	4 HLT Ø2355	OUT ; OUTPUT WORD SUBROUTINE
Ø2411	4 STB Ø2555	T2; SAVE WORD
Ø2412	4 STA Ø2556	T3; SAVE KEY
Ø2413	4 LDA Ø2556	CONT T3

SCIENTIFIC DATA SYSTEMS

SCIENTIFIC DATA SYSTEMS

SDS 900 SERIES PROGRAM LISTING

PROBLEM: BASIC UTILITY PACKAGE IV

Catalog No. ØØØØ11

PAGE 1Ø of 15

PROGRAMMER: A. W. ENGLAND, SDS

DATE 11-23-62

LOCATION	INSTRUCTION			REMARKS
Ø2414	Ø	SKA	ØØØ26	SC4; IS KEY ZERO
Ø2415	4	BRU	Ø2417	+2; NO
Ø2416	4	BRR	Ø241Ø	OUT; YES, FINISHED
Ø2417	Ø	ABC	2ØØØ5	
Ø242Ø	Ø	LSH	ØØØØ2	; SHIFT KEY DIGIT
Ø2421	4	STB	Ø2556	T3; SAVE KEY
Ø2422	4	SKA	Ø2533	C4; IS DIGIT 2 OR 3
Ø2423	4	BRU	Ø2431	DGTOUT; YES
Ø2424	Ø	SKA	ØØØ24	SC2; NO, IS DIGIT 1
Ø2425	4	BRU	Ø2441	I/R; YES
Ø2426	4	LDB	Ø2547	SPACE SPCHAR; NO, OUTPUT SPACE
Ø2427	4	BRM	Ø24Ø4	SW4-2
Ø243Ø	4	BRU	Ø2413	CONT
Ø2431	4	STA	Ø2557	DGTOUT T4; KEY DIGIT TO X
Ø2432	4	LDX	Ø2557	T4; *
Ø2433	4	LDA	Ø2555	T2; WORD TO A
Ø2434	Ø	ABC	2ØØØ5	
Ø2435	2	LSH	ØØØØØ	Ø; SHIFT 2 OR 3
Ø2436	4	STB	Ø2555	T2; SAVE WORD
Ø2437	Ø	RSH	ØØØØ6	6; MAKE OCTAL CODE

SCIENTIFIC DATA SYSTEMS

SCIENTIFIC DATA SYSTEMS

SDS 900 SERIES PROGRAM LISTING

PROBLEM: BASIC UTILITY PACKAGE IV

Catalog No. ØØØØ11

PROGRAMMER: A. W. ENGLAND, SDS

DATE 11-23-62

LOCATION	INSTRUCTION		REMARKS
Ø2442	4 SKN Ø2555		T2; IS WORD INDIRECT
Ø2443	4 LDB Ø2547		**SPCHAR; NO**
Ø2444	4 BRM Ø24Ø4		SW4-2; OUTPUT SPACE OR 1
Ø2445	4 LDA Ø2555		T2; SHIFT OFF INDIRECT BIT
2446	Ø LSH ØØØØ1		1; *
Ø2447	4 STA Ø2555		T2; *
Ø245Ø	Ø SKS 2ØØ4Ø		BP4; RELATIVE ADDRESS FORMAT
Ø2451	4 SKNI Ø2325		LOC; YES, IS WORD RELATIVE?
Ø2452	4 BRU Ø2426		SPACE; NON RELATIVE, NO RELATIVE TAG
Ø2453	Ø RSH ØØØ12		1Ø; YES
Ø2454	4 SUB Ø2325		LOC
Ø2455	Ø LSH ØØØ12		1Ø;
Ø2456	4 LDB Ø2545		+CHAR
Ø2457	4 STA Ø2555		T2; SAVE RELATIVE INCREMENT
Ø246Ø	4 SKN Ø2555		T2; IS INCREMENT NEGATIVE?
Ø2461	4 BRU Ø2427		SPACE+1; NO
Ø2462	Ø EOR ØØØ26		SC4; YES, COMPLIMENT INCREMENT
Ø2463	4 ADD Ø2313		K1; *
Ø2441	4 LDB Ø2544	I/R	**ICHAR**
Ø244Ø	4 BRU Ø2427		**SPACE+1;** OUTPUT THE DIGIT

SCIENTIFIC DATA SYSTEMS

SCIENTIFIC DATA SYSTEMS

SDS 900 SERIES PROGRAM LISTING

PROBLEM: BASIC UTILITY PACKAGE IV

Catalog No. ØØØØ11

PROGRAMMER: A. W. ENGLAND, SDS

DATE 11-23-62

LOCATION	INSTRUCTION	REMARKS	
Ø2464	4 LDB Ø2546		-CHAR
Ø2465	4 BRU Ø2457		-6
Ø2466	377776ØØ	EIGHT	
Ø2467	3173377Ø	INST	
Ø247Ø	433Ø2212	PERIOD	ENTER; LIST OF CONTROL CHARACTERS
Ø2471	434Ø2212	¤	ENTER;
Ø2472	543Ø2175	L	SETLOC; ALSO *CHAR
Ø2473	454Ø2175	*	SETLOC
Ø2474	414Ø227Ø	@	AT
Ø2475	413Ø2273	#	JUMP
Ø2476	441Ø2273	J	JUMP
Ø2477	453Ø2225	$	SW5+1
Ø25ØØ	473Ø2272	COMMA	SUBR
Ø25Ø1	426Ø2243	F	FILL
Ø25Ø2	471Ø2257	:	FILL
Ø25Ø3	463Ø233Ø	T	TYPE
Ø25Ø4	447Ø2333	P	PUNCH
Ø25Ø5	437Ø2265	SC	STOP
Ø25Ø6	461Ø213Ø	/	START
Ø25Ø7	42ØØ22Ø2	+	SIGN

SCIENTIFIC DATA SYSTEMS

SDS 900 SERIES PROGRAM LISTING

PROBLEM: BASIC UTILITY PACKAGE IV

Catalog No. ØØØØ11

PROGRAMMER: A. W. ENGLAND, SDS

DATE 11-23-62

LOCATION	INSTRUCTION	REMARKS
Ø251Ø	44ØØ22Ø2	- SIGN
Ø2511	431Ø2166	I IDA
Ø2512	452Ø2226	CR RESET
Ø2513	464Ø2153	U SW1+1; UNUSED
Ø2514	4Ø2Ø217Ø	2 DIGIT; TO AVOID CONFUSING 2 WITH R12
Ø2515	465Ø2253	V VERSET
Ø2516	4ØØØ217Ø	Ø DIGIT; FOR EXPANSION
Ø2517	4ØØØ217Ø	Ø DIGIT; *
Ø252Ø	4ØØØ217Ø	Ø DIGIT; *
Ø2521	4ØØØ217Ø	Ø DIGIT; *
Ø2522	ØØ2Ø1ØØ4	R12 EOM RPTW,1,1
Ø2523	432Ø2153	BS SW1+1; IGNORE
Ø2524	472Ø2153	TB SW1+1; *
Ø2525	412Ø2153	SP SW1+1; *
Ø2526	477Ø2153	DL SW1+1; *
Ø2527	4ØØØ217Ø	LSTEND DIGIT
Ø253Ø	Ø77ØØØØØ	C1
Ø2531	Ø1ØØØØØØ	C2
Ø2532	ØØØØØØØ7	C3
Ø2533	ØØØØØØØ2	C4

SCIENTIFIC DATA SYSTEMS

SCIENTIFIC DATA SYSTEMS

SDS 900 SERIES PROGRAM LISTING

PROBLEM: BASIC UTILITY PACKAGE IV

Catalog No. ØØØØ11

PROGRAMMER: A. W. ENGLAND, SDS

DATE 11-23-62

LOCATION	INSTRUCTION	REMARKS
Ø2534	ØØØØØØ77	C5
Ø2535	3774ØØØØ	C6
Ø2536	ØØØ77741	FIVE
Ø2537	Ø7777741	NEGATIVE NUMBER OF ITEMS IN LIST
Ø254Ø	52ØØØØØØ	CRCHAR
Ø2541	61ØØØØØØ	/CHAR
Ø2542	72ØØØØØØ	TBCHAR
Ø2543	34ØØØØØØ	⌑CHAR
Ø2544	31ØØØØØØ	ICHAR
Ø2545	2ØØØØØØØ	+CHAR
Ø2546	4ØØØØØØØ	-CHAR
Ø2547	12ØØØØØØ	SPCHAR
Ø255Ø	ØØØØØØØØ	FLAG1
Ø2551	41241ØØØ	A
Ø2552	415Ø2243	B
Ø2553	1234567Ø	X
Ø2554	33Ø1ØØ13	T1
Ø2555	Ø77ØØØØØ	T2
Ø2556	ØØØØØØØØ	T3
Ø2557	ØØØØØØ13	T4

SCIENTIFIC DATA SYSTEMS

SCIENTIFIC DATA SYSTEMS

SDS 900 SERIES PROGRAM LISTING

PROBLEM: BASIC UTILITY PACKAGE IV

Catalog No. ØØØØ11

PROGRAMMER: A. W. ENGLAND, SDS

DATE 11-23#62

LOCATION	INSTRUCTION	REMARKS	
Ø256Ø	ØØ2Ø1ØØ1	R1	EOM RKBW,1,1
Ø2561	432Ø2554	R2	WIM T1
Ø2562	ØØ2Ø1Ø41	R3	EOM TYPW,1,1
Ø2563	432Ø2554	R4	WIM T1
Ø2564	ØØ2ØØØØ6	R5	UNUSED
Ø2565	443Ø2ØØØ	R6	UNUSED
Ø2566	412Ø2554	R7	MIW T1
Ø2567	412Ø2554	R8	MIW T1

BASIC UTILITY PACKAGE IV

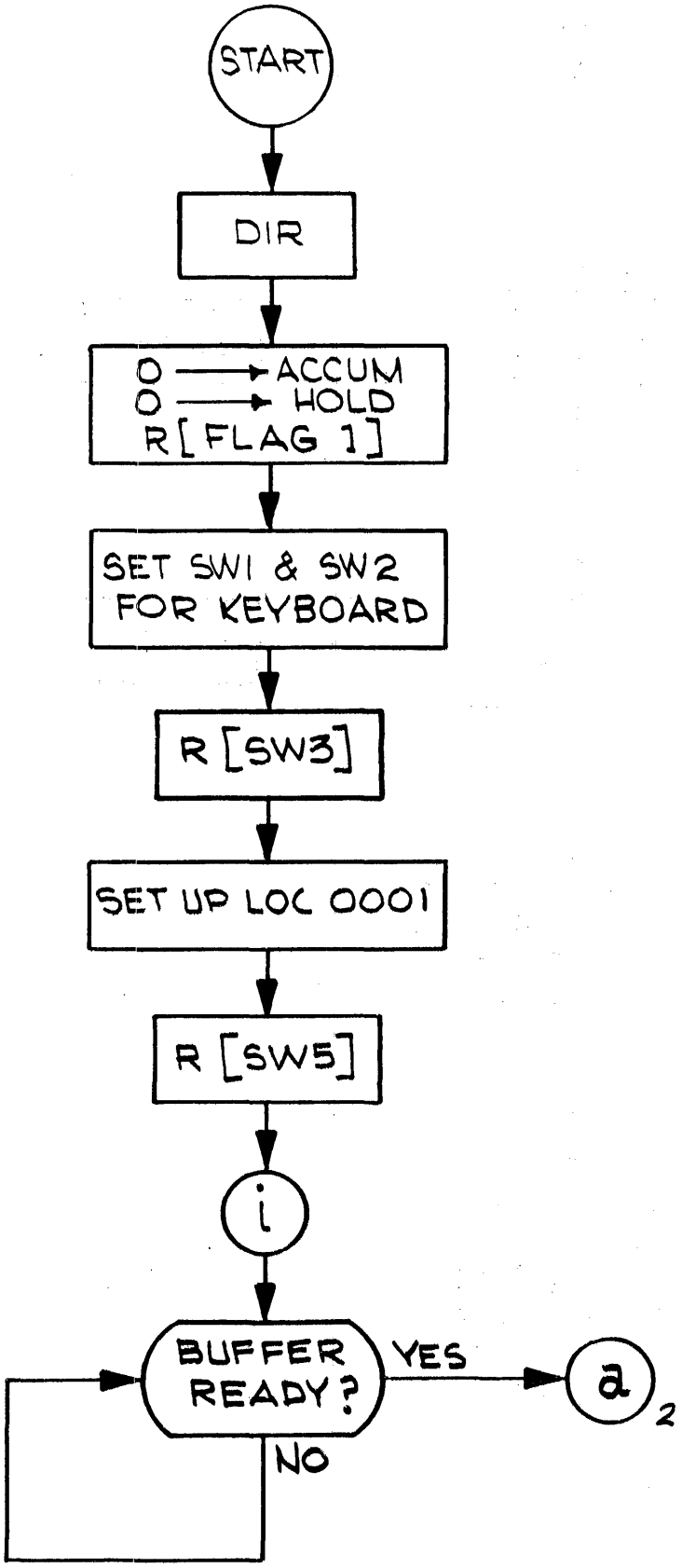

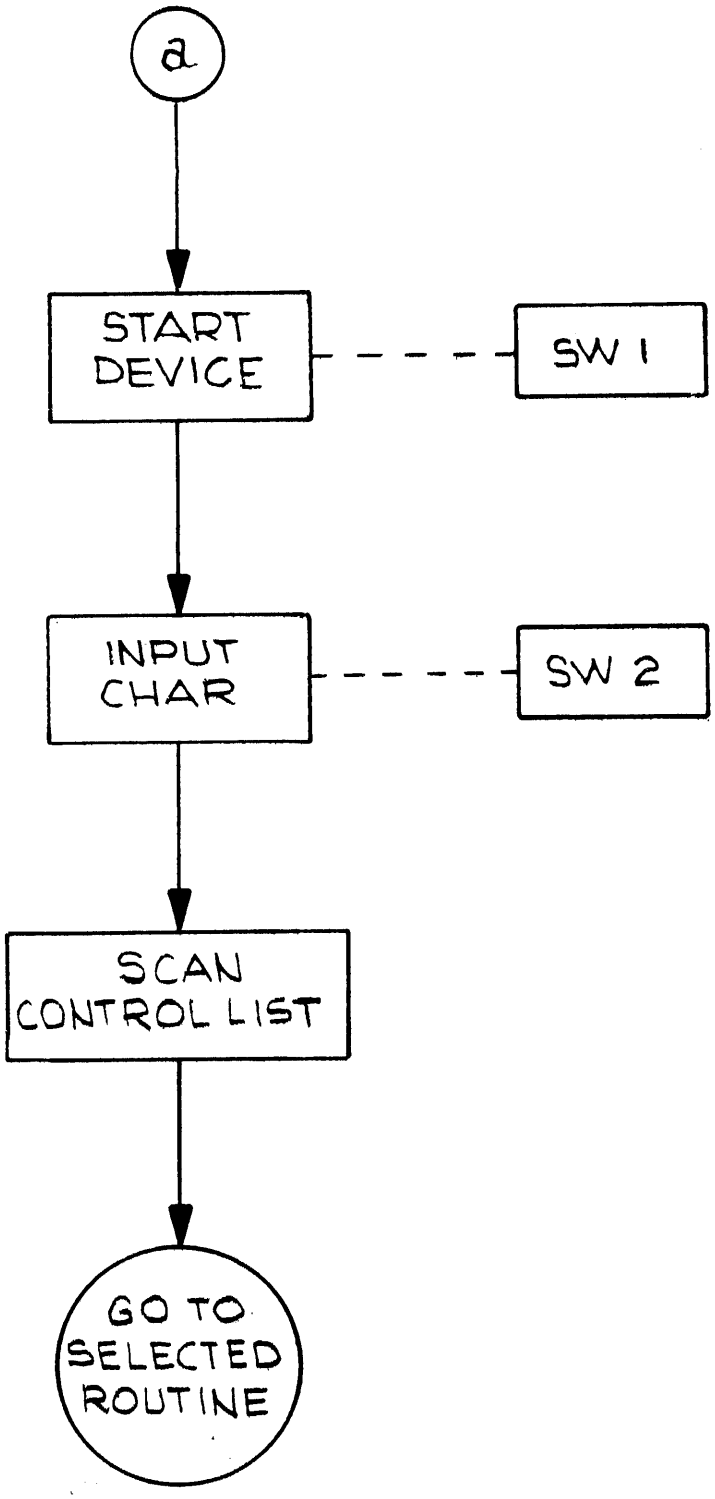
a
START DEVICE
SW 1
INPUT CHAR
SW 2
SCAN CONTROL LIST
GO TO SELECTED ROUTINE

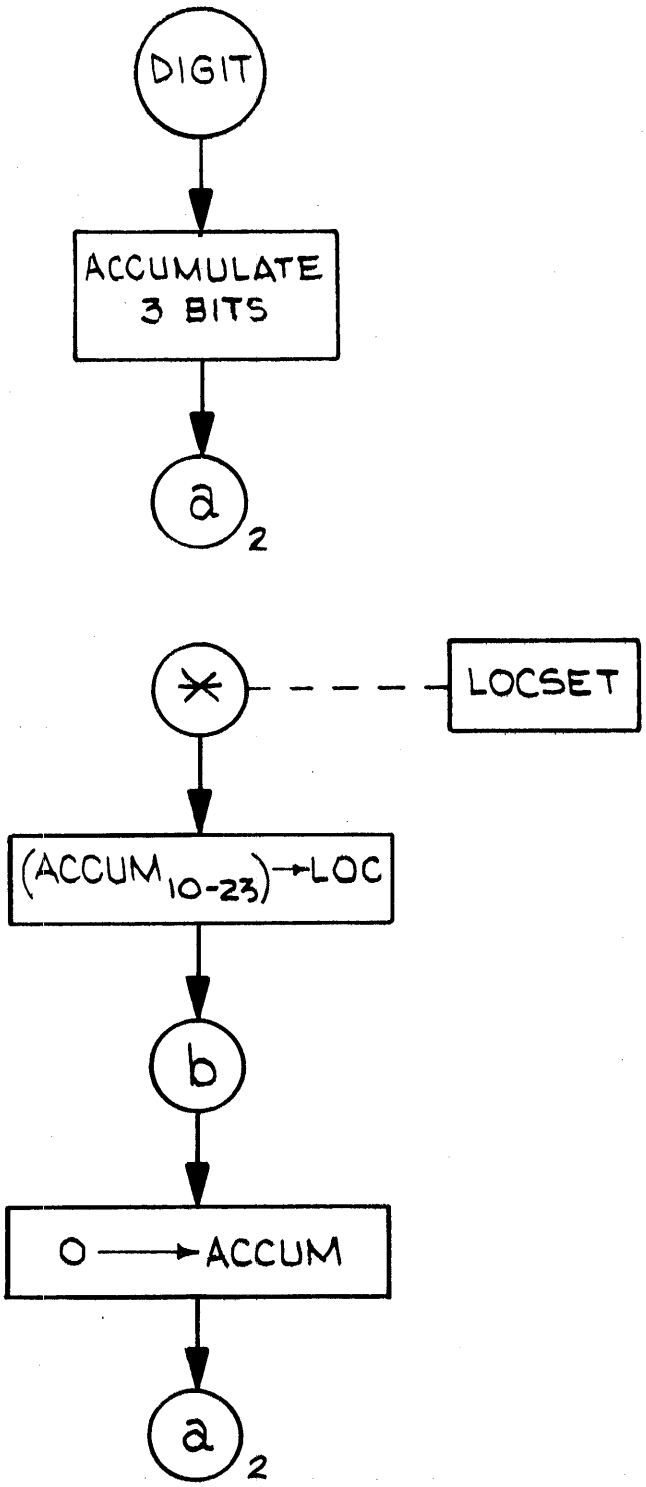
DIGIT
ACCUMULATE 3 BITS
a2
*
LOCSET
(ACCUM10-23)→LOC
b
0 → ACCUM
a2

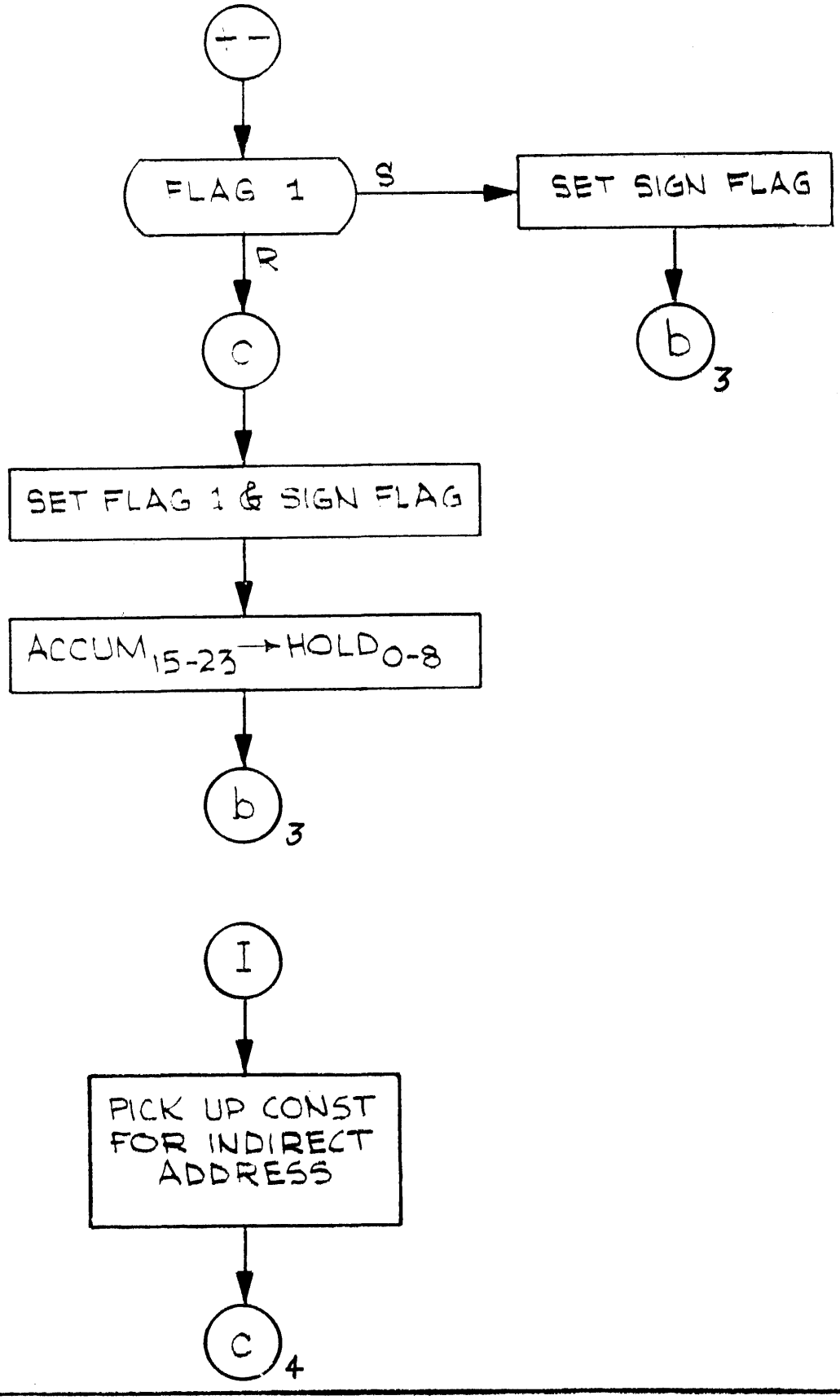
FLAG 1
S
SET SIGN FLAG
R
b 3
c
SET FLAG 1 & SIGN FLAG
ACCUM 15-23 → HOLD 0-8
b 3
I
PICK UP CONST FOR INDIRECT ADDRESS
c 4

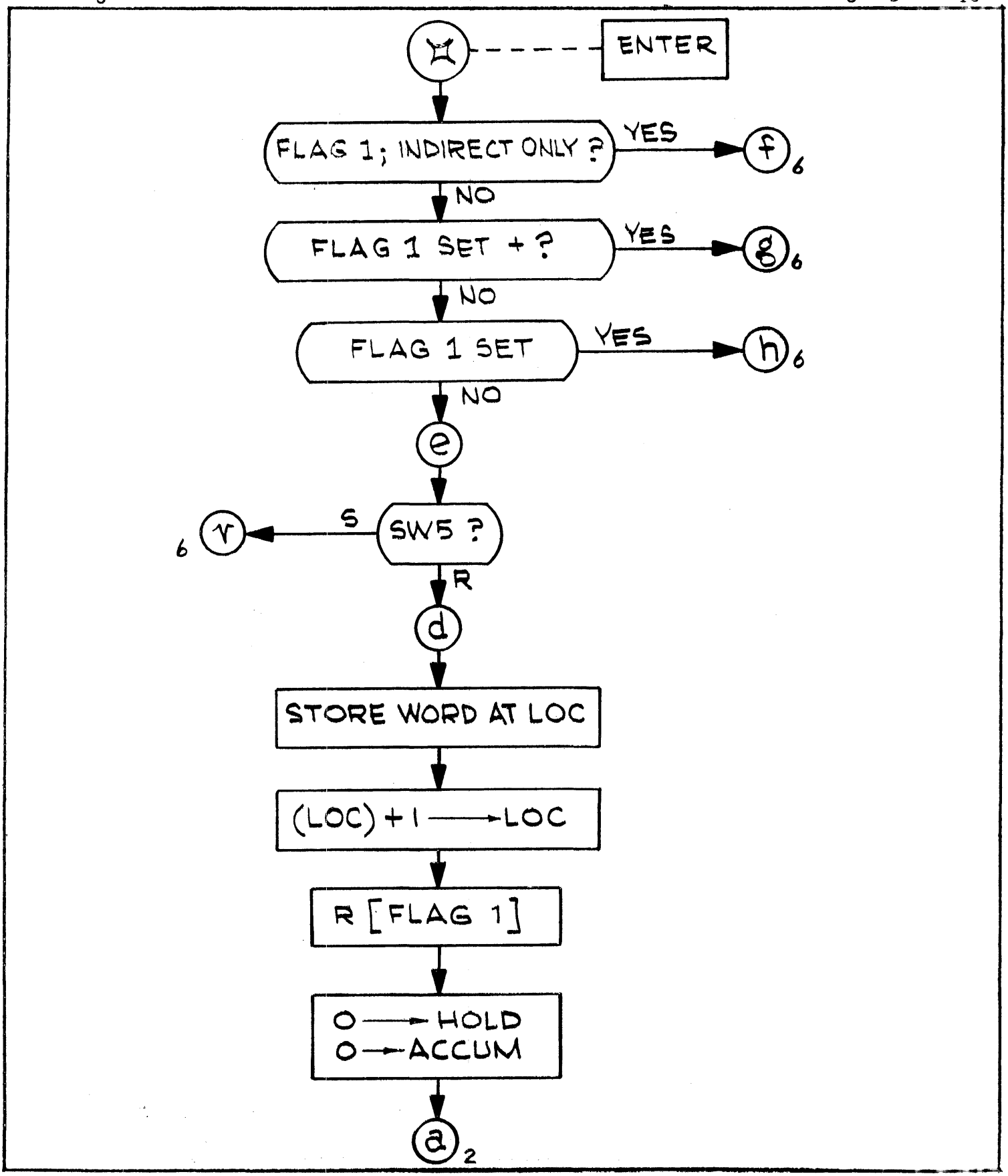
ENTER
FLAG 1; INDIRECT ONLY ?
YES
f 6
NO
FLAG 1 SET + ?
YES
g 6
NO
FLAG 1 SET
YES
h 6
NO
e
S
SW5 ?
6 r
R
d
STORE WORD AT LOC
(LOC) + 1 → LOC
R [FLAG 1]
0 → HOLD
0 → ACCUM
a 2

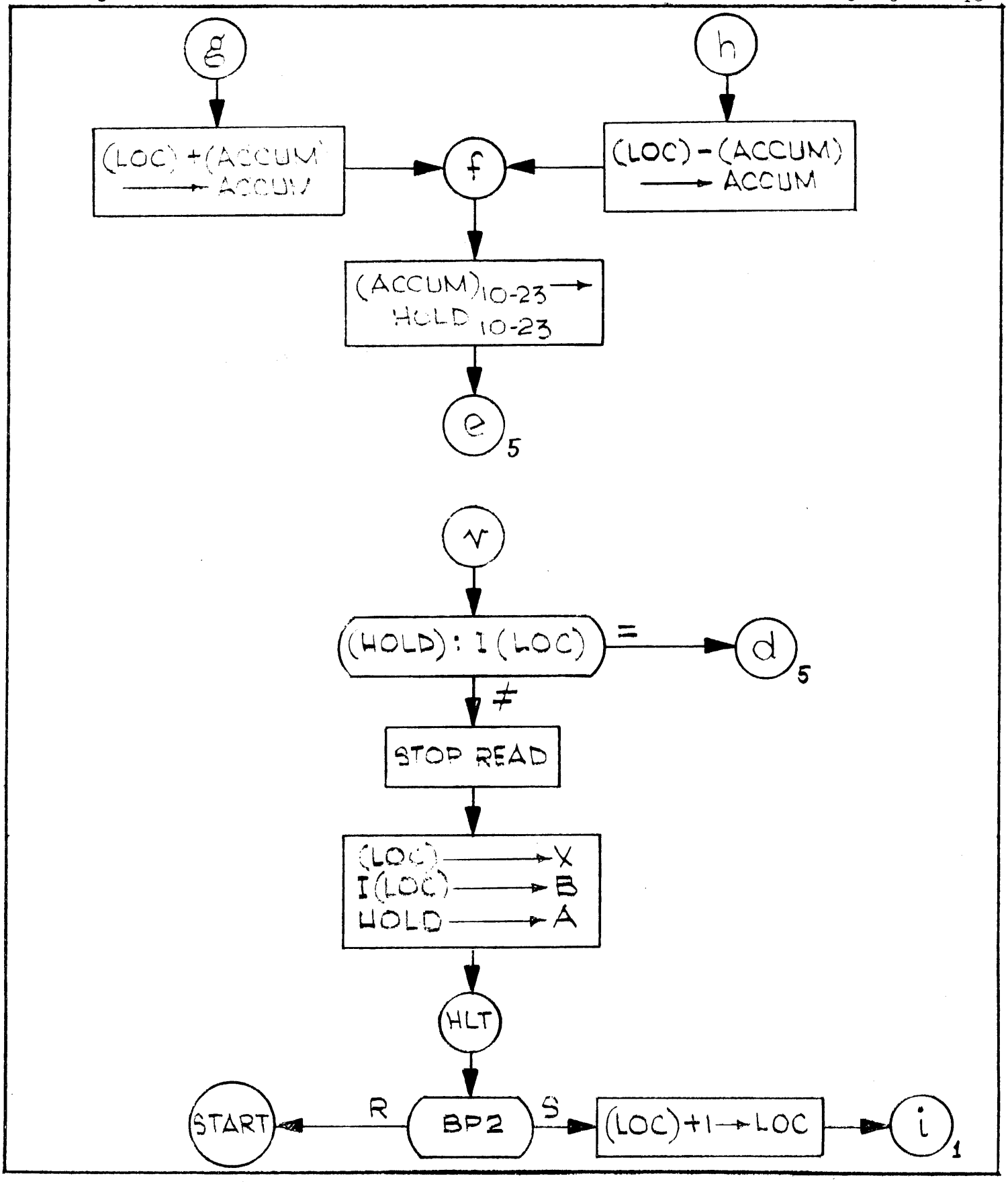
g
h
(LOC) + (ACCUM) → ACCUM
(LOC) - (ACCUM) → ACCUM
f
(ACCUM)10-23 → HOLD 10-23
e 5
v
(HOLD) : I (LOC)
=
d 5
≠
STOP READ
(LOC) → X
I(LOC) → B
HOLD → A
HLT
START
R
BP2
S
(LOC)+1 → LOC
i 1

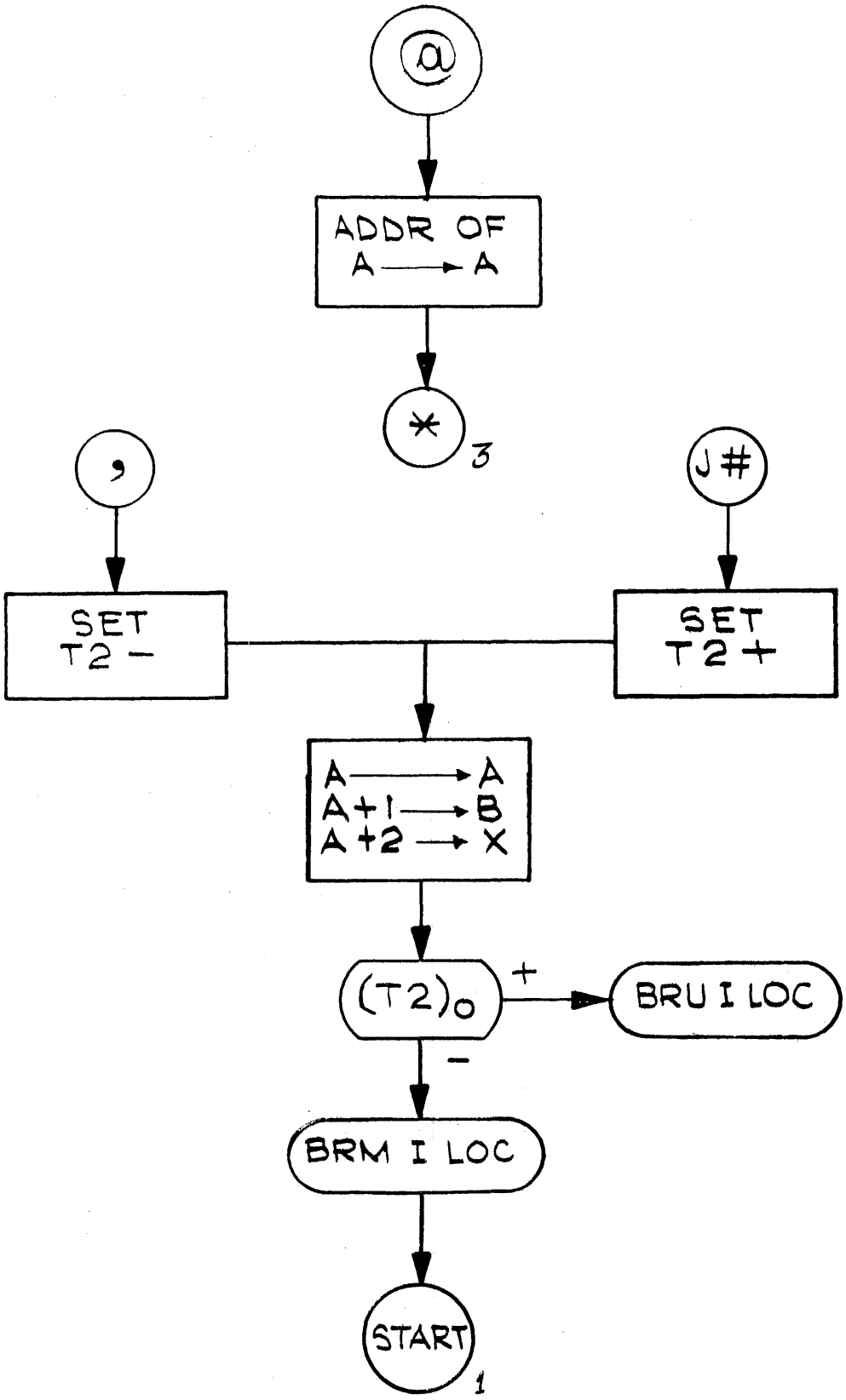
@
ADDR OF
A → A
*
3
,
J#
SET
T2 −
SET
T2 +
A → A
A+1 → B
A+2 → X
(T2)0
+
BRU I LOC
−
BRM I LOC
START
1

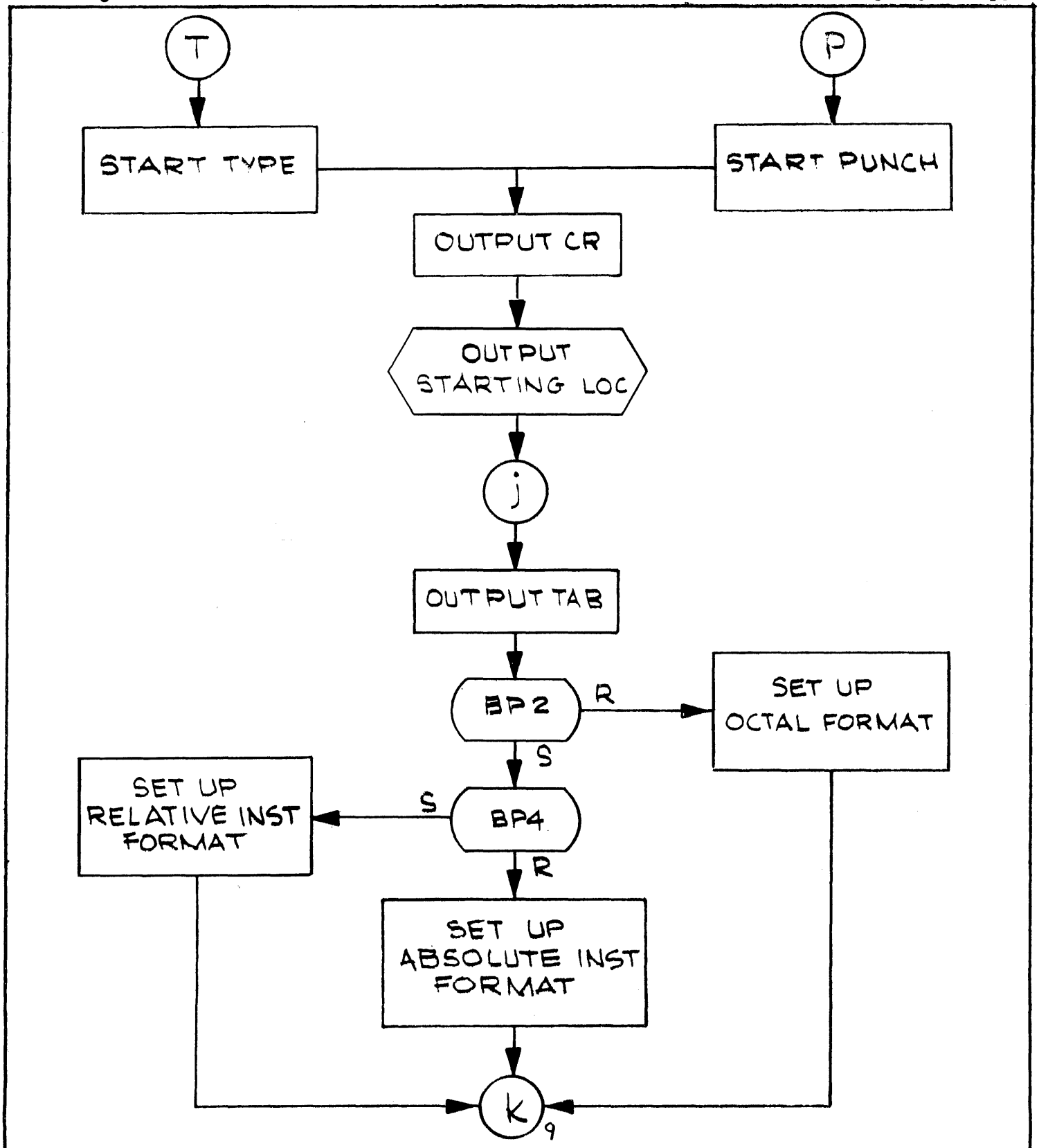
T
P
START TYPE
START PUNCH
OUTPUT CR
OUTPUT STARTING LOC
j
OUTPUT TAB
BP2
R
SET UP OCTAL FORMAT
S
SET UP RELATIVE INST FORMAT
S
BP4
R
SET UP ABSOLUTE INST FORMAT
k
9

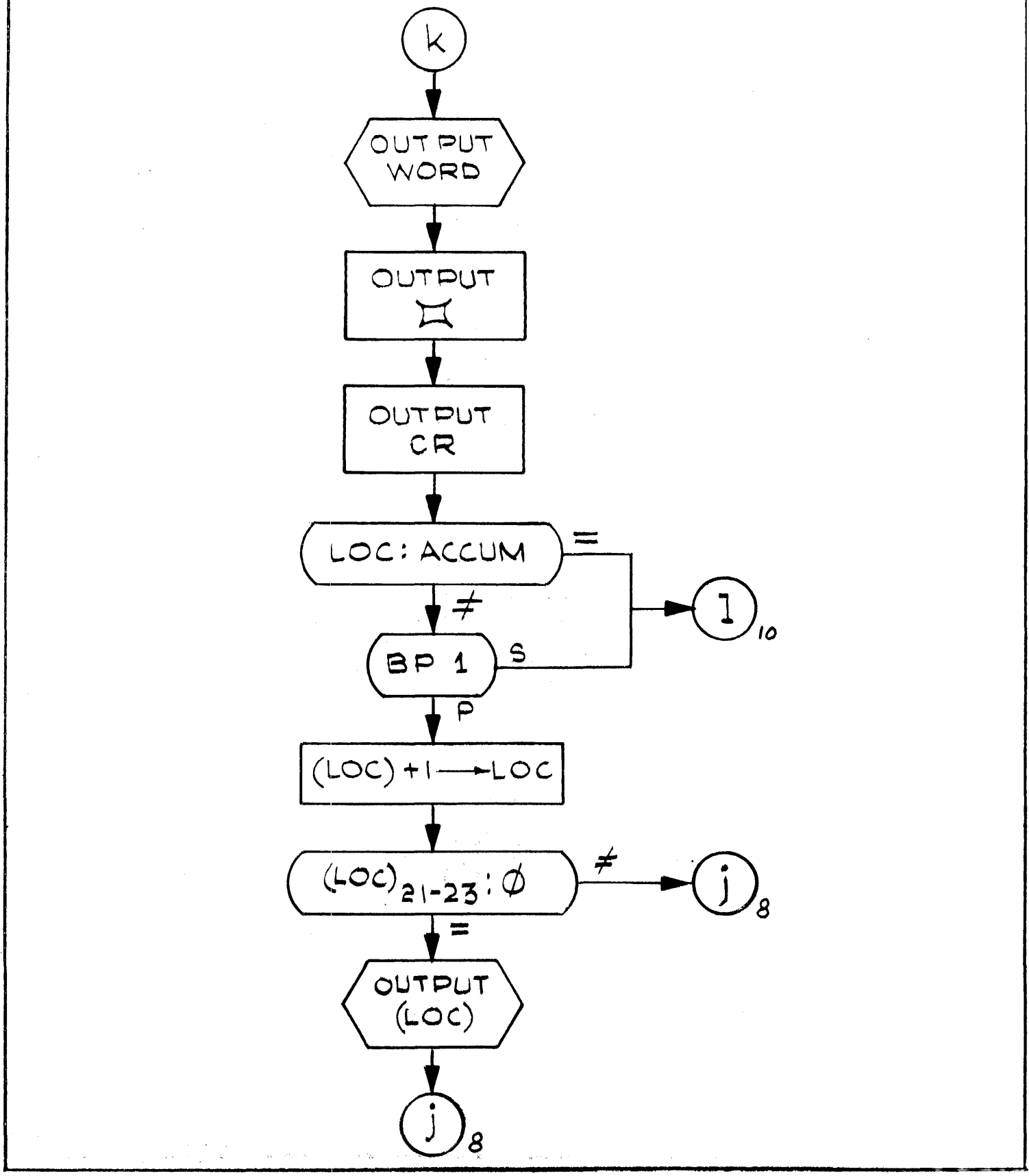
k
OUTPUT WORD
OUTPUT
OUTPUT CR
LOC: ACCUM
=
≠
1
10
BP 1
S
P
(LOC) + 1 → LOC
(LOC)21-23 : Ø
≠
j
8
=
OUTPUT (LOC)
j
8

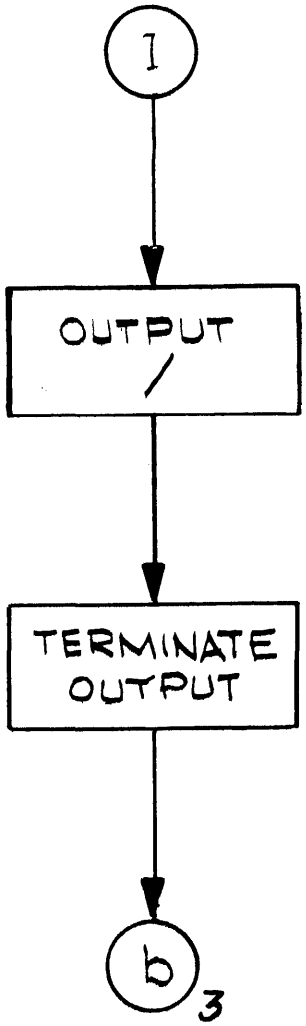
1
OUTPUT
/
TERMINATE
OUTPUT
b
3

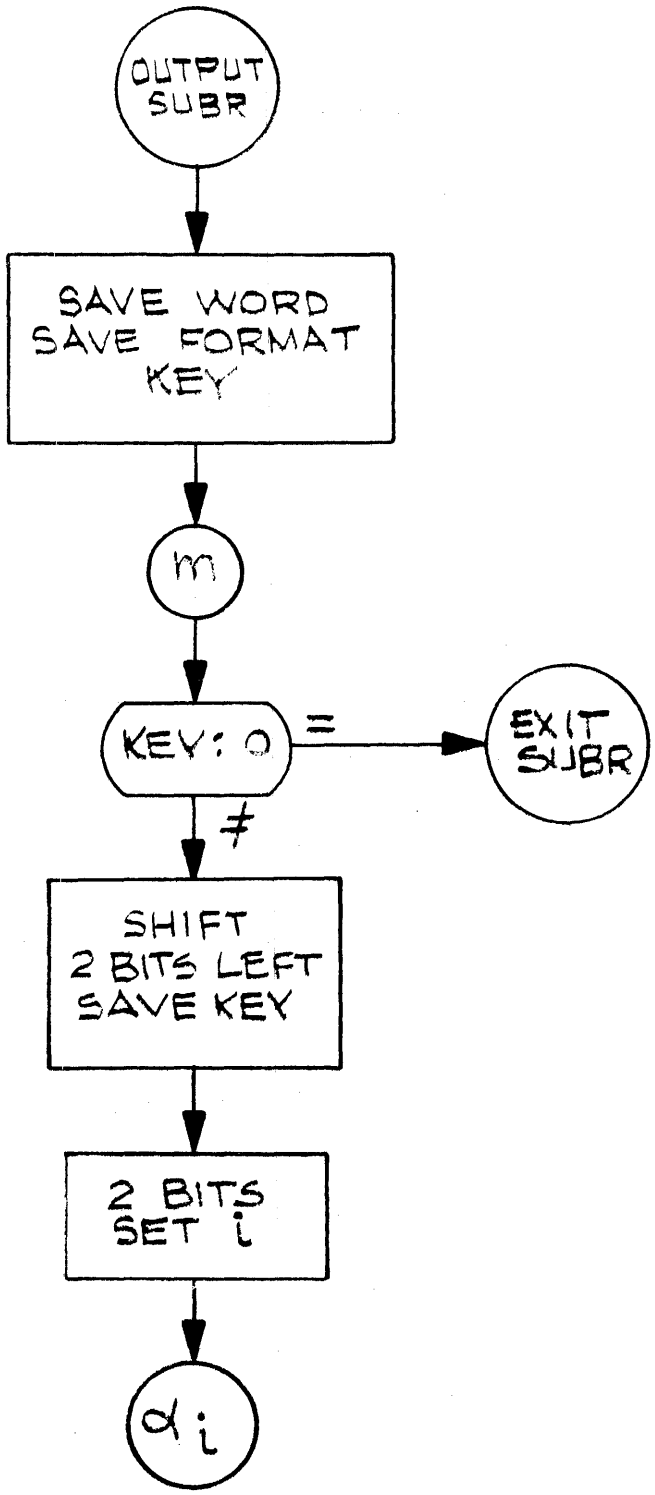
OUTPUT SUBR
SAVE WORD
SAVE FORMAT
KEY
m
KEY: 0
=
EXIT SUBR
≠
SHIFT
2 BITS LEFT
SAVE KEY
2 BITS
SET i
αi

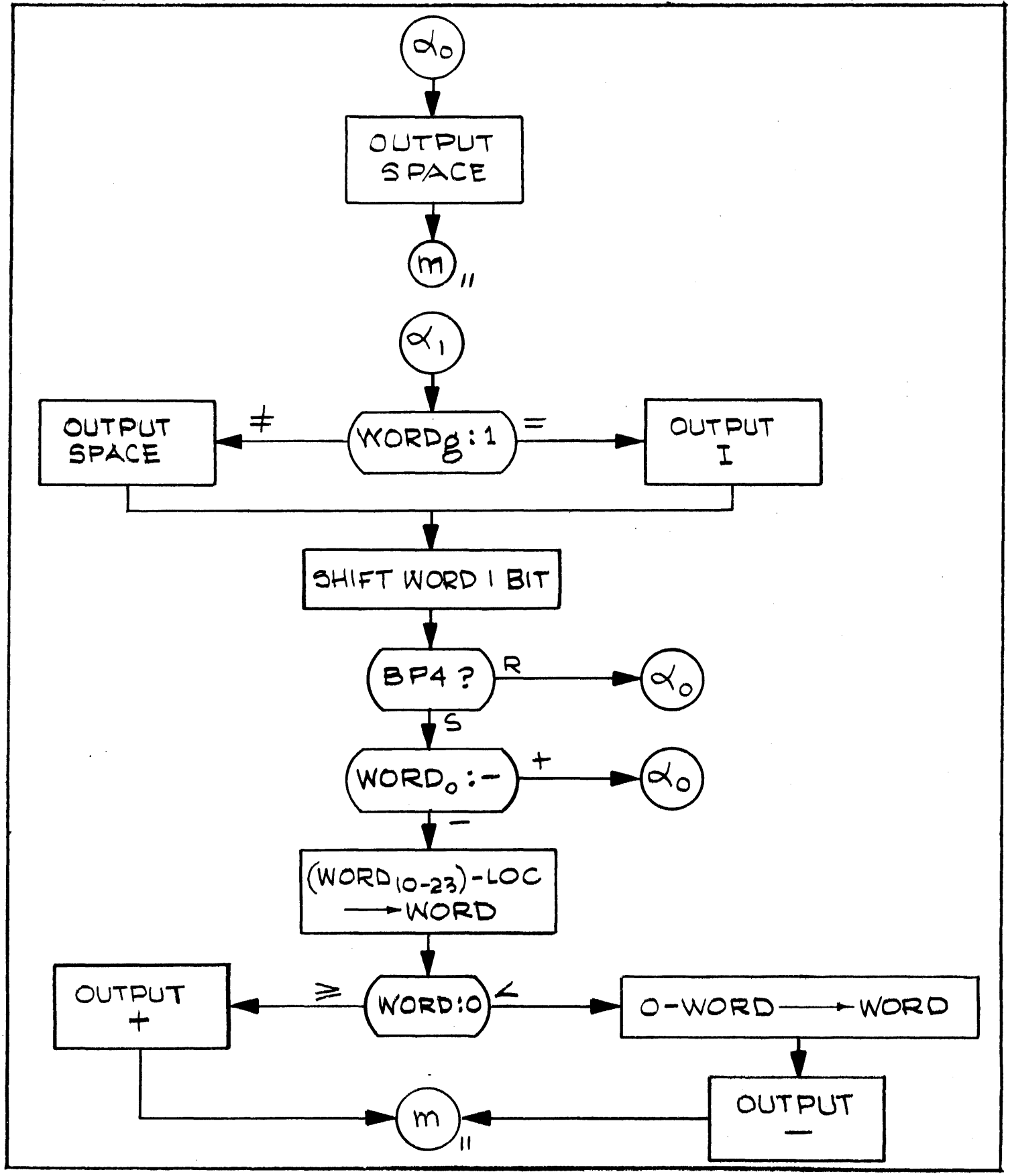
α0
OUTPUT SPACE
m11
α1
OUTPUT SPACE
≠
WORDg:1
=
OUTPUT I
SHIFT WORD 1 BIT
BP4 ?
R
α0
S
WORD0:−
+
α0
−
(WORD10-23)-LOC → WORD
OUTPUT +
≥
WORD:0
<
0-WORD → WORD
m11
OUTPUT −

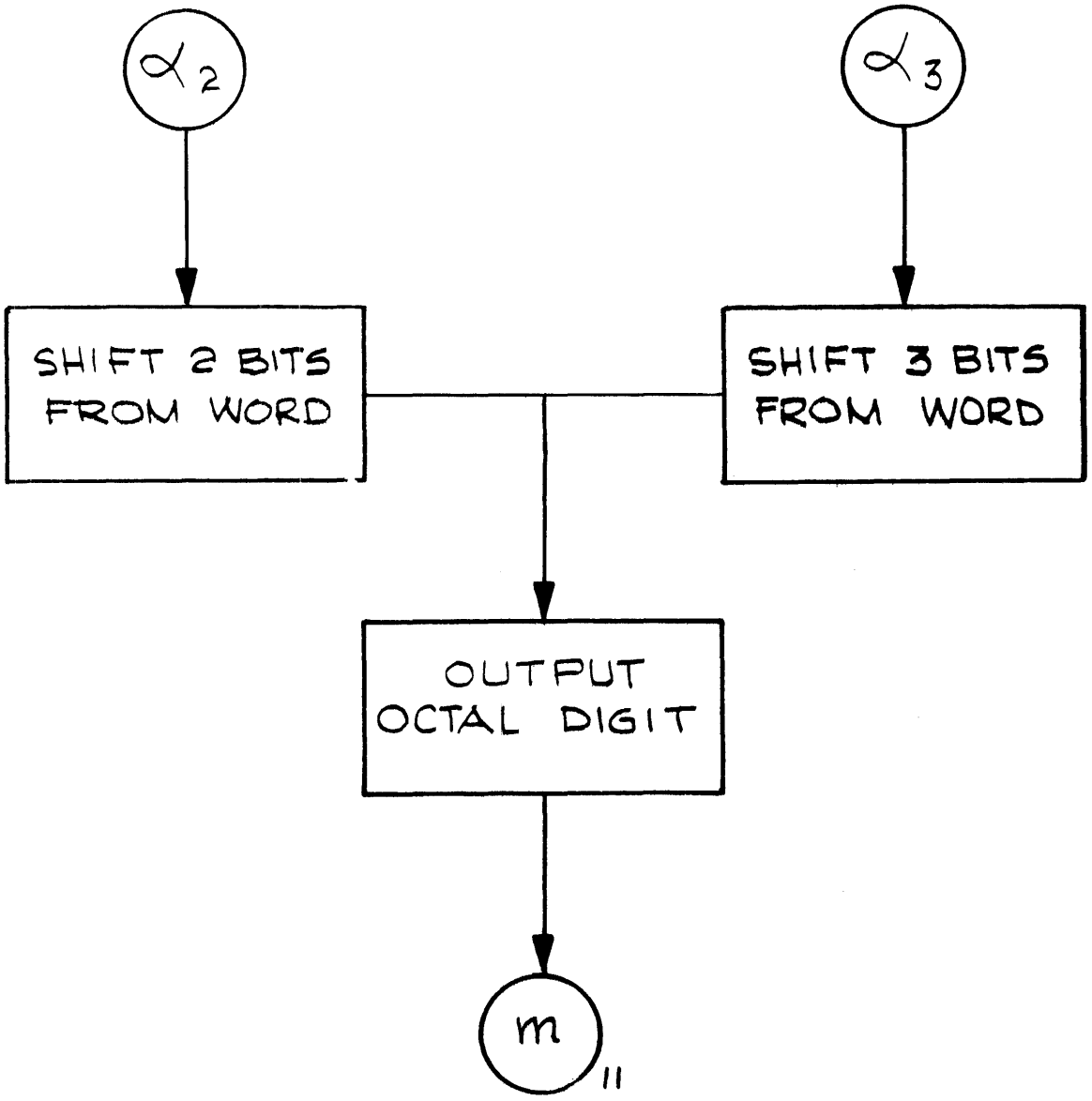
α2
α3
SHIFT 2 BITS FROM WORD
SHIFT 3 BITS FROM WORD
OUTPUT OCTAL DIGIT
m11

IDENTIFICATION: DEBUG

AUTHOR: R. C. Shepardson, SDS

ACCEPTED: January 11, 1964

COMPUTER CONFIGURATION: Any SDS 910 or 920 computer

PURPOSE: This is a relocatable routine which will aid the user in debugging.

Functions which may be performed by this routine are:

1. Make in-core corrections or insertions.
2. Dump selected memory areas on the printer or typewriter.
3. Perform snapshots at selected points.
4. Allow the user to seize control at selected points.
5. Perform masked memory searches.

PROGRAMMED OPERATORS: None

STORAGE: This relocatable routine requires 419_{10} (643_8) locations. Locations $2\text{-}14_8$ are used for temporaries. The loader uses $1\text{-}63_8$. The standard constants in $23_8\text{-}27_8$ are used. The loader will store in location 1 a BRU to the load origin.

TIMING: I/O device speed.

USE: LOADING

The routine is preceded by a relocatable loader which requires the following loading procedure:

1. Set the A register to the desired load origin.
2. Set breakpoint switches (see Breakpoint Settings).
3. Perform standard fill procedure.

USE: (cont.)

BREAKPOINT SETTINGS

BP1 - Reset - Console typewriter input
Set - Card reader input

BP2 - Reset - Console typewriter output
Set - Buffered printer output

BP3 - Reset - Single space output
Set - Double space output

BP4 - Reset - No seizure by user at each snapshot
Set - Transfer control to user after each snapshot

CONTROL

Control may be transferred to DEBUG by branching to the load origin.

Another alternative is to execute a:

BRM load origin + 16

which will save and print the contents of the P, A, B and X registers, after which the DEBUG routine will seize control. An exit request will restore the contents of the registers and return.

The debugging functions available are listed below:

1. NOP Request

Input: N location list.

This request will store NOP instructions in each of the locations specified in the location list. Control is then returned for the next request.

2. ALTER Request

Input: A location, alter list.

This request will store the octal words specified by the alter list into monotonically increasing locations.

Contiguous commas leave the appropriate location(s) unchanged.

USE: (cont.) The following example best illustrates the use of this request:

A2075, 7602100, 3502012, 102066, 17, , 77, 27/3, 77777777.

The above requests alters memory as follows:

2075	07602100
2076	03502012
2077	00102066
2100	00000017
2101	unchanged
2102	00000077
2103 thru 2130	00000003
2131	77777777

Card input requests will not allow a block alteration (as in locations 2103 thru 2130 above) except as the last alteration on the card because of timing restrictions.

3. INSERT Request

Input: I location, octal instruction list.

This request will cause the list of octal instructions to be logically inserted following the location specified.

The following example will illustrate the method used:

I 403, 27700002, 3704013.

Before		After	
403	07104013	001	BBBBB
BBBBB		07104013	
BBBBB+1		27700002	
BBBBB+2		03704013	
BBBBB+3		00100404	

Any insertions use memory immediately following the DEBUG Routine (designated as BBBBB above).

Caution should be used in making insertions because the instruction at the location of the insertion will be moved.

USE: (cont.)

4. DUMP Request

Input: D block.

This request will dump onto the buffered printer or the console typewriter the contents of the memory block specified and return control for the next request.

The format of the output is eight octal words per line. If all numbers on one or more lines are identical, all lines except the first will be suppressed.

Example:

D1400-1427.

or

D1400.

Appendix II contains a sample of the dump output.

5. SNAP SHOT Request

Input: S location, block list.

This request will insert at the location specified a calling sequence which, when executed, will print on the console typewriter or printer the location of the snapshot and the contents of the A, B and X registers and the contents of memory blocks specified in the block list. Furthermore, if BP4 is set, control will be transferred following the snapshot to the DEBUG routine to enable the user to make additional requests at that point. Otherwise, control returns as usual to the main program.

Example:

S 4017, 200-220, 0, 740-743.

6. EXIT Request

Input: X

When the user has seized control during a snapshot (BP 4 set) this request will cause the A, B and X registers to be restored and control to be returned to the point where the snapshot occurred.

USE: (cont.)

7. BRANCH Request

Input: B location.

This request restores the A, B and X registers and then performs a branch to the specified location.

8. RESTORE Request

Input: R location list.

This request will logically remove the insertion (including snapshot insertion) made at the location specified. Control is then returned for the next request.

Example:

R 1260, 3102, 4017.

9. TOGGLE Request

Input: T toggle list.

This request enables the user to reassign or eliminate the breakpoint toggle tests within the DEBUG routine in the event that the breakpoint toggle settings conflict with his program.

The toggle list consists of 1 to 4 characters. The ith character corresponds to the option normally associated with the ith breakpoint toggle as follows:

a. 1 - Assign breakpoint toggle 1 (to the option normally associated with the ith breakpoint toggle).

b. 2 - Assign breakpoint toggle 2

c. 3 - Assign breakpoint toggle 3

d. 4 - Assign breakpoint toggle 4

e. S - Assume the breakpoint toggle normally associated with the ith option set

f. R - Assume the breakpoint toggle normally associated with the ith option reset

Example:

T4RRS.

T12S.

USE: (cont.)

10. LOOK Request

Input: L lower bound, upper bound, value, mask.

This request searches the memory area designated by the bounds for all locations whose contents are equivalent to the value specified using the mask.

INPUT COMMENTS

Both forms of the space character and the carriage return character are completely ignored.

$ will cause the current request to be immediately terminated. The next request is then read.

. designates the end of each request except the EXIT request.

Appendix I contains a rigorous description of the syntax of the requests.

MODIFICATIONS

The variable BBB in the DEBUG Routine addresses the last location used of the insertion block. The user may wish to change the memory area used for the insertion block by altering the contents of BBB which is in load origin $+570_8$.

METHOD: Not Applicable.

The meta-language defining the syntax is similar to that which is used in the definition of the ALGOL syntax.

<nop request>	::=	N <location list> .
<alter request>	::=	A <location> , <alter list> .
<insert request>	::=	I <location> , <instruction list> .
<snapshot request>	::=	S <location> , <block list> .
<dump request>	::=	D <block> .
<restore request>	::=	R <location list> .
<branch request>	::=	B <location> .
<exit request>	::=	X
<toggle request>	::=	T <toggle list> .
<search request>	::=	L <location> , <location> , <octal number> , <octal number> .
<location list>	::=	<location> , <location list> | <location>
<instruction list>	::=	<octal number> , <instruction list> | <octal number>
<alter list>	::=	<alter entry> , <alter list> | <alter entry>
<alter entry>	::=	, | <octal number> / <octal number> | <octal number>
<block list>	::=	<block> , <block list> | <block>
<block>	::=	<location> - <location> | <location>
<toggle list>	::=	<toggle designation> <toggle list> | <toggle designator>
<toggle designator>	::=	1 | 2 | 3 | 4 | R | S

<location> is 1 to 5 octal digits.
<octal number> is 1 to 8 octal digits.
Spaces (60 or 12) and carriage return characters are ignored.
$ will immediately terminate a request.

```
00540  05100000 03603374 04600014 07640000 03640000 00100537 03503374 05540000
00550  03540000 07603374 05100000 03503374 03703375 04530003 07540000 06700001
00560  02000000 07703373 04301031 07103375 05100000 03503374 03703375 07540000
00570  00100572 00100636 03503376 07603374 07703375 04301000 03503377 04500014
00600  01400354 04600014 06503376 01703377 07200025 00100621 04610012 05403374
00610  00100617 05303377 00100616 01700354 03500024 00100600 04630003 01400125
00620  00100660 07603377 04600014 05303376 00100542 01700354 03503374 00100636
00630  05303377 00100452 00100660 05500024 05303377 00100660 04600014 05403376
00640  04600014 00100660 01700025 05303374 00100651 05500024 05303377 00100537
00650  00100660 05303377 00100660 04600014 03503376 00100640 04610012 05400025
00660  07103375 05100000 05540000 05100000 04301720 07740000 03703370 03503362
00670  06600001 03503363 04610012 01403336 00620001 03503364 07500025 03503371
00700  07600000 03503372 07003362 00103444 25400000 00220001 04503365 37003337
00710  27200000 00100716 07203367 07203366 00100722 00101111 07203366 07203367
00720  00100722 00101101 07600025 27200001 00100726 00101101 07203363 00100731
00730  00103442 27600000 07203335 00100757 04630003 05503364 04500014 06700001
00740  05503363 04301000 25500001 04600014 01700325 03503363 04610012 04301000
00750  20500001 07603363 25300001 00100735 05133371 07103366 00101271 01403335
00760  04620005 07703362 04301031 07103370 04301000 00103422 25300001 01700025
00770  01700025 07200025 00100774 00100735 05503364 07200025 07500025 00100736
01000  00000000 20500001 25500001 20500001 25500001 25500001 20500001 20500001
01010  - 01027 20500001
01030  05101000 00000000 20400001 20400001 25400001 20400001 25400001 20400001
01040  20400001 20400001 25400001 20400001 20400001 25400001 05101031 04501720
01050  03603365 06600001 03503363 07600026 03503371 07600000 03503372 04610012
01060  01403365 06620003 04620005 07740000 04301031 03503364 27500000 05503365
01070  05500024 00220001 03503362 07603337 27200000 00101105 07203362 07203364
```

```
                                  1            FORT
00000          00002              2            BSS     2
00002   2 32 00012                3   START    WIM     10.2
00003   0 41 00002                4            BRX     START
00004   0 71 00007                5            LDX     NOP
00005   2 32 00064                6   WIM      WIM     LAST.2
00006   0 41 00005                7            BRX     WIM
00007   0 20 77726                8   NOP      NOP*    -LAST+10
00010   0 35 00006                9   FOO      STA     RELADR
00011   0 16 00062               10            MRG     BRUMOP
00012   0 35 00001               11            STA     JUMP
00013   0 02 00604               12   BLOCK    EOM     604
00014   0 32 00003               13            WIM     ID2
00015   0 32 00003               14            WIM     ID2
00016   0 76 00003               15            LDA     ID2
00017   0 17 00063               16            EOR     1Q9
00020   0 72 00063               17            SKA     1Q9
00021   0 55 00006               18            ADD     RELADR
00022   0 01 00030               19            BRU     24
00023   0 00 00000               20   ZERO     PZE
00024   00000001                 21   ONE      DEC     1
00025   40000000                 22   SIGN     OCT     40000000
00026   77777777                 23   ONES     DEC     -1
00027   00037777                 24   ADRMSK   OCT     37777
00030   0 14 00027               25            ETR     ADRMSK
00031   0 35 00005               26            STA     COUNT
00032   0 55 00060               27            ADD     EAX
00033   0 35 00053               28            STA     MODIFY
00034   0 76 00003               29            LDA     ID2
00035   0 32 00004               30   READ     WIM     WORD
00036   0 40 21000               31            SKS     21000
00037   0 01 00047               32            BRU     STORE
00040   0 75 00005               33   ENDBLK   LDB     COUNT
00041   0 17 00063               34            EOR     1Q9
00042   0 72 00063               35            SKA     1Q9
00043   0 36 00006               36            STB     RELADR
00044   0 72 00061               37            SKA     TAGBIT
00045   0 01 00013               38            BRU     BLOCK
00046   0 01 00001               39            BRU     JUMP
00047   0 71 00004               40   STORE    LDX     WORD
00050   0 72 00025               41            SKA     SIGN
00051   0 53 00004               42            SKN     WORD
00052   0 01 00054               43            BRU     NOREL
00053   2 77 00000               44   MODIFY   EAX     0.2
00054   0 37 40005               45   NOREL    STX*    COUNT
00055   0 61 00005               46            MIN     COUNT
00056   0 61 00053               47            MIN     MODIFY
00057   0 01 00035               48            BRU     READ
00060   2 77 00000               49   EAX      EAX     0.2
00061   20000000                 50   TAGBIT   OCT     20000000
00062   0 01 00000               51   BRUMOP   BRU     0
00063   0 00 40000               52   1Q9      HLT*
                00001            53   JUMP     BOOL    1
                00003            54   ID2      BOOL    3
```

```
00004     55    WORD    BOOL    4
00005     56    COUNT   BOOL    5
00006     57    RELADR  BOOL    6
00064     58    LAST    EQU     *
00000     59            END
```

```
                                 *                                DEBUG ROUTINE  (RELOCATABLE)  R C
                                 *                                12/30/63
                                          REL
                  00000                   ORG     0
00000   0 02 00000              DISW      DISW
00001   4 23 00544              X         EXU     BPT1
00002   4 01 00435                        BRU     RCDW
00003   4 43 00241                        BRM     CRET
00004   4 71 00361                        LDX     PRNXT
00005   4 41 00000                        BRX     *
00006   0 02 02001                        RKBW    1,1
00007   4 43 00272              X1        BRM     IN05
00010   4 71 00616                        LDX     M10
00011   6 70 00573                        SKM     TBL+10,2
00012   4 01 00002                        BRU     *+2
00013   6 01 40603                        BRU*    TBL+20,2
00014   4 41 37775                        BRX     *-3
00015   4 01 37763                        BRU     DISW
00016   0 00 00000              PM        PZE
00017   4 43 00130                        BRM     SN1
00020   4 76 37776                        LDA     PM
00021   4 35 00071                        STA     SNAP1
00022   4 43 00136                        BRM     SN2
00023   4 01 37756                        BRU     X
00024   4 43 00227              DUMP      BRM     IN0
00025   0 35 00005                        STA     AAA
00026   0 76 00002                        LDA     IN01
00027   4 72 00604                        SKA     037
00030   4 01 00004                        BRU     DUMP2
00031   4 43 00222                        BRM     IN0
00032   0 54 00005                        SUB     AAA
00033   4 01 00002                        BRU     *+2
00034   0 76 00023              DUMP2     CLA
00035   0 35 00003                        STA     CT
00036   0 02 00000                        DISW
00037   4 43 00265                        BRM     DUMDUM
00040   4 01 37741                        BRU     X
00041   4 43 00212              ALTER1    BRM     IN0
00042   0 35 00005                        STA     AAA
00043   0 46 30003              ALTER     CLR
00044   0 36 00010              ALTER2    STB     CT1
00045   4 43 00206                        BRM     IN0
00046   0 46 00014                        XAB
00047   0 76 00002                        LDA     IN01
00050   4 72 00557                        SKA     02
00051   4 01 00002                        BRU     *+2                     N /
00052   4 01 37772                        BRU     ALTER2                    /
00053   0 36 40005              ALTER3    STB*    AAA
00054   0 61 00005                        MIN     AAA
00055   0 60 00010                        SKR     CT1
00056   0 20 77773              M5        NOP*    -5
00057   0 53 00010                        SKN     CT1
00060   4 01 37773                        BRU     ALTER3
00061   4 01 37762                        BRU     ALTER
```

```
00062  4 43 00125      55   SNAP   BRM      INS1
00063  4 75 40505      56          LDB*     BBB
00064  4 35 40504      57          STA*     BBB
00065  4 61 00503      58          MIN      BBB
00066  4 76 00530      59          LDA      BRMSN1
00067  4 35 40501      60          STA*     BBB
00070  4 61 00500      61          MIN      BBB
00071  4 36 40477      62          STB*     BBB
00072  4 43 00161      63   NMIN   BRM      IN0
00073  4 75 40475      64          LDB*     BBB
00074  4 35 40474      65          STA*     BBB
00075  4 61 00473      66          MIN      BBB
00076  0 76 00023      67          CLA
00077  4 35 40471      68          STA*     BBB
00100  4 61 00470      69          MIN      BBB
00101  4 36 40467      70          STB*     BBB
00102  0 76 00002      71          LDA      IN01
00103  4 72 00530      72          SKA      037
00104  4 01 37766      73          BRU      NMIN
00105  4 43 00146      74          BRM      IN0
00106  4 71 00462      75          LDX      BBB
00107  2 54 37776      76          SUB      -2.2
00110  2 35 37777      77          STA      -1.2
00111  4 01 37761      78          BRU      NMIN
00112  0 00 00000      79   SNAP1  PZE                          DISPLAY REGISTERS
00113  4 43 00034      80          BRM      SN1
00114  4 71 37776      81          LDX      SNAP1
00115  2 76 00001      82          LDA      1.2
00116  4 72 00505      83          SKA      SNAP5
00117  4 01 00003      84          BRU      *+3
00120  2 77 00002      85          EAX      2.2
00121  4 01 37774      86          BRU      *-4
00122  0 54 00024      87          SUB      ONE
00123  4 43 00036      88          BRM      SN2
00124  4 71 37766      89   SNAP7  LDX      SNAP1
00125  2 76 00001      90          LDA      1.2
00126  4 72 00475      91          SKA      SNAP5
00127  4 01 00010      92          BRU      SNAP6
00130  4 61 37762      93          MIN      SNAP1
00131  4 61 37761      94          MIN      SNAP1
00132  0 35 00005      95          STA      AAA
00133  2 76 00002      96          LDA      2.2
00134  0 35 00003      97          STA      CT
00135  4 43 00167      98          BRM      DUMDUM
00136  4 01 37766      99          BRU      SNAP7
00137  4 23 00411     100   SNAP6  EXU      BPT4
00140  4 01 37641     101          BRU      X
00141  4 01 00002     102          BRU      *+2
00142  0 02 00000     103   EXIT   DISW
00143  4 76 00422     104          LDA      AREG
00144  4 75 00422     105          LDB      BREG
00145  4 71 00422     106          LDX      XREG
00146  4 51 37744     107          BRR      SNAP1
00147  0 00 00000     108   SN1    PZE
```

```
00150  4 35 00415    109          STA     AREG
00151  4 36 00415    110          STB     BREG
00152  4 37 00415    111          STX     XREG
00153  4 43 00302    112          BRM     SELECT
00154  4 76 00443    113          LDA     SNAP2
00155  4 43 00243    114          BRM     OUTH
00156  4 12 00464    115          MIW     BLANK
00157  4 51 37770    116          BRR     SN1
00160  0 00 00000    117  SN2     PZE
00161  0 66 00017    118          RSH     15
00162  4 71 37674    119          LDX     M5
00163  4 43 00244    120          BRM     OUTO
00164  4 71 00440    121          LDX     M3
00165  0 37 00011    122  SNAP4   STX     T1
00166  6 76 00435    123          LDA     SNAP3+3,2
00167  4 43 00231    124          BRM     OUTH
00170  0 71 00011    125          LDX     T1
00171  6 75 00377    126          LDB     AREG+3,2
00172  4 71 00206    127          LDX     M8
00173  4 43 00234    128          BRM     OUTO
00174  0 71 00011    129          LDX     T1
00175  4 41 37770    130          BRX     SNAP4
00176  0 02 14000    131          TOPW
00177  4 51 37761    132          BRR     SN2
00200  4 43 00007    133  INSERT  BRM     INS1
00201  4 75 40367    134          LDB*    BBB
00202  4 35 40366    135          STA*    BBB
00203  4 61 00365    136          MIN     BBB
00204  4 36 40364    137          STB*    BBB
00205  4 43 00046    138          BRM     IN0
00206  4 01 37773    139          BRU     *-5
00207  0 00 00000    140  INS1    PZE
00210  4 43 00043    141          BRM     IN0
00211  4 61 00357    142          MIN     BBB
00212  4 16 00357    143          MRG     BRU
00213  0 35 00005    144          STA     AAA
00214  4 35 40354    145          STA*    BBB
00215  4 61 40353    146          MIN*    BBB
00216  4 75 00352    147          LDB     BBB
00217  0 76 40005    148          LDA*    AAA
00220  0 36 40005    149          STB*    AAA
00221  4 51 37766    150          BRR     INS1
00222  4 43 00031    151  RESTOR  BRM     IN0
00223  0 35 00005    152          STA     AAA
00224  0 71 40005    153          LDX*    AAA
00225  2 76 00000    154          LDA     0,2
00226  0 35 40005    155          STA*    AAA
00227  4 01 37773    156          BRU     RESTOR
00230  4 43 00023    157  NOP     BRM     IN0
00231  0 35 00005    158          STA     AAA
00232  4 76 00140    159          LDA     NOPINS
00233  0 35 40005    160          STA*    AAA
00234  4 01 37774    161          BRU     NOP
00235  4 43 00016    162  BRUTO   BRM     IN0
```

```
00236  0 02 00000     163          DISW
00237  0 35 00005     164          STA      AAA
00240  4 76 00325     165          LDA      AREG
00241  4 75 00325     166          LDB      BREG
00242  4 71 00325     167          LDX      XREG
00243  0 01 40005     168          BRU*     AAA
00244  0 00 00000     169  CRET    PZE
00245  4 43 00177     170          BRM      BRTW
00246  0 02 02041     171          TYPW     1,1
00247  4 12 00370     172          MIW      052
00250  0 02 14000     173          TOPW
00251  4 43 00173     174          BRM      BRTW
00252  4 51 37772     175          BRR      CRET
00253  0 00 00000     176  IN0     PZE
00254  0 76 00002     177          LDA      IN01
00255  4 75 00361     178          LDB      077
00256  4 70 00354     179          SKM      033
00257  4 01 00002     180          BRU      *+2
00260  4 01 37521     181          BRU      X
00261  4 43 00020     182          BRM      IN05
00262  4 72 00353     183          SKA      070
00263  4 01 00014     184          BRU      IN02
00264  4 14 00345     185          ETR      07
00265  0 35 00007     186  IN03    STA      T2
00266  4 43 00013     187          BRM      IN06
00267  4 72 00346     188          SKA      070
00270  4 01 00005     189          BRU      IN04
00271  0 66 20003     190          RCY      3
00272  0 76 00007     191          LDA      T2
00273  0 67 20003     192          LCY      3
00274  4 01 37771     193          BRU      IN03
00275  0 76 00007     194  IN04    LDA      T2
00276  4 51 37755     195          BRR      IN0
00277  0 61 00005     196  IN02    MIN      AAA
00300  4 01 37754     197          BRU      IN0+1
00301  0 00 00000     198  IN05    HLT
00302  0 32 00002     199          WIM      IN01
00303  0 76 00002     200          LDA      IN01
00304  4 75 00332     201          LDB      077
00305  4 70 00335     202          SKM      BLANK
00306  4 01 00002     203          BRU      *+2
00307  4 01 37773     204          BRU      IN05+1
00310  4 70 00322     205          SKM      033
00311  4 01 00002     206          BRU      *+2
00312  0 02 00000     207          DISW
00313  4 70 00325     208          SKM      053
00314  4 01 00002     209          BRU      *+2
00315  4 01 37463     210          BRU      DISW
00316  4 70 00134     211          SKM      060
00317  4 01 00002     212          BRU      *+2
00320  4 01 37762     213          BRU      IN05+1
00321  4 70 00316     214          SKM      052
00322  4 51 37757     215          BRR      IN05
00323  4 01 37757     216          BRU      IN05+1
```

```
00324  0 00 00000     217   DUMDUM HLT
00325  4 43 00060     218   DUMP1  BRM     DLOC
00326  0 71 00026     219          LDX     ONES
00327  0 77 40005     220          EAX*    AAA
00330  0 75 00026     221          LDB     ONES
00331  0 36 00010     222          STB     CT1
00332  2 76 00000     223          LDA     0.2
00333  0 61 00010     224          MIN     CT1
00334  2 70 00001     225          SKM     1.2
00335  4 01 00002     226          BRU     *+2
00336  4 41 37775     227          BRX     *-3
00337  0 61 00010     228          MIN     CT1
00340  0 76 00010     229          LDA     CT1
00341  4 73 00270     230          SKG     07
00342  4 01 00023     231          BRU     PRNXT
00343  4 14 00276     232          ETR     037770
00344  0 54 00024     233          SUB     ONE
00345  0 35 00004     234          STA     TU
00346  0 55 00005     235          ADD     AAA
00347  0 35 00005     236          STA     AAA
00350  0 76 00003     237          LDA     CT
00351  0 54 00004     238          SUB     TU
00352  0 35 00003     239          STA     CT
00353  0 12 00025     240          MIW     SIGN
00354  4 12 00266     241          MIW     BLANK
00355  4 12 00265     242          MIW     BLANK
00356  4 71 37500     243          LDX     M5
00357  0 75 00005     244          LDB     AAA
00360  0 67 20011     245          LCY     9
00361  4 43 00046     246          BRM     OUTO
00362  0 76 00023     247          CLA
00363  0 35 00006     248          STA     PRCT
00364  4 12 00256     249   PRNXT1 MIW     BLANK
00365  0 75 40005     250   PRNXT  LDB*    AAA
00366  4 71 00012     251          LDX     M8
00367  4 43 00040     252          BRM     OUTO
00370  0 61 00005     253          MIN     AAA
00371  0 60 00003     254          SKR     CT
00372  0 20 00000     255   NOPINS NOP
00373  0 53 00003     256          SKN     CT
00374  4 01 00003     257          BRU     *+3
00375  0 02 14000     258          TOPW
00376  4 51 37726     259          BRR     DUMDUM
00377  0 60 00006     260          SKR     PRCT
00400  0 20 77770     261   M8     NOP*    -8
00401  0 53 00006     262          SKN     PRCT
00402  4 01 37762     263          BRU     PRNXT1
00403  0 02 14000     264          TOPW
00404  4 01 37721     265          BRU     DUMP1
00405  0 00 00000     266   DLOC   PZE
00406  4 43 00047     267          BRM     SELECT
00407  4 76 00222     268          LDA     07
00410  0 35 00006     269          STA     PRCT
00411  0 75 00005     270          LDB     AAA
```

```
00412  4 71 37444     271            LDX     M5
00413  0 67 20011     272            LCY     9
00414  4 43 00013     273            BRM     OUTO
00415  4 12 00225     274            MIW     BLANK
00416  4 12 00224     275            MIW     BLANK
00417  4 51 37766     276            BRR     DLOC
00420  0 00 00000     277    OUTH    PZE
00421  4 71 00204     278            LDX     M4
00422  0 35 00004     279            STA     TO
00423  0 12 00004     280            MIW     TO
00424  0 67 00006     281            LSH     6
00425  4 41 37775     282            BRX     *-3
00426  4 51 37772     283            BRR     OUTH
00427  0 00 00000     284    OUTO    PZE
00430  0 76 00023     285            CLA
00431  0 66 20003     286            RCY     3
00432  0 36 00004     287            STB     TO
00433  0 12 00004     288            MIW     TO
00434  0 67 20006     289            LCY     6
00435  4 41 37773     290            BRX     OUTO+1
00436  4 51 37771     291            BRR     OUTO
00437  4 43 00005     292    RCDW    BRM     BRTW
00440  0 40 12006     293            CRTW    1
00441  4 01 37777     294            BRU     *-1
00442  0 02 02006     295            RCDW    1,1
00443  4 01 37344     296            BRU     X1
00444  0 00 00000     297    BRTW    PZE
00445  0 40 21000     298            BRTW
00446  4 01 37777     299            BRU     *-1
00447  4 23 00077     300            EXU     BPT2
00450  4 01 00002     301            BRU     *+2
00451  4 51 37773     302            BRR     BRTW
00452  0 40 12060     303    060     SKS     12060          PRTW 1
00453  4 01 37777     304            BRU     *-1
00454  4 51 37770     305            BRR     BRTW
00455  0 00 00000     306    SELECT  PZE
00456  4 23 00070     307            EXU     BPT2
00457  4 01 00006     308            BRU     DUMP1A
00460  4 43 37564     309            BRM     CRET
00461  4 23 00066     310            EXU     BPT3
00462  4 43 37562     311            BRM     CRET
00463  0 02 02041     312            TYPW    1,1
00464  4 51 37771     313            BRR     SELECT
00465  4 43 37757     314    DUMP1A  BRM     BRTW
00466  4 23 00061     315            EXU     BPT3
00467  4 01 00003     316            BRU     *+3
00470  0 02 10460     317            EOM     10460          PSCW 1,0
00471  4 01 00002     318            BRU     *+2
00472  0 02 12460     319            EOM     12460          PSCW 1,2
00473  4 43 37751     320            BRM     BRTW
00474  0 02 02060     321            EOM     2060     PLPW      1,1
00475  4 51 37760     322            BRR     SELECT
00476  0 46 30003     323    SERCH   CLR
00477  0 35 00003     324            STA     CT
```

```
00500  4 43 37553     325            BRM     IN0
00501  0 35 00005     326            STA     AAA
00502  4 43 37551     327            BRM     IN0
00503  0 35 00012     328            STA     AAA1
00504  4 43 37547     329            BRM     IN0
00505  0 35 00013     330            STA     VALUE
00506  4 43 37545     331            BRM     IN0
00507  0 02 00000     332            DISW
00510  0 35 00014     333            STA     MASK
00511  0 76 40005     334   NXT2     LDA*    AAA
00512  0 75 00014     335            LDB     MASK
00513  0 70 00013     336            SKM     VALUE
00514  4 01 00006     337            BRU     NXT1
00515  4 43 37670     338            BRM     DLOC
00516  0 75 40005     339            LDB*    AAA
00517  4 71 37661     340            LDX     M8
00520  4 43 37707     341            BRM     OUT0
00521  0 02 14000     342            TOPW
00522  0 76 00012     343   NXT1     LDA     AAA1
00523  0 73 00005     344            SKG     AAA
00524  4 01 37255     345            BRU     X
00525  0 61 00005     346            MIN     AAA
00526  4 01 37763     347            BRU     NXT2
00527  4 71 00076     348   TOGGLE   LDX     M4
00530  0 37 00011     349   TOG1     STX     T1
00531  4 43 37550     350            BRM     IN05
00532  4 70 00100     351            SKM     033
00533  4 01 00002     352            BRU     *+2
00534  4 01 37244     353            BRU     DISW
00535  4 71 00026     354            LDX     M6
00536  6 70 00021     355            SKM     TBL1+6,2
00537  4 41 37777     356            BRX     *-1
00540  6 76 00025     357            LDA     TBL1+12,2
00541  0 71 00011     358            LDX     T1
00542  6 35 00007     359            STA     BPT4+1,2
00543  4 41 37765     360            BRX     TOG1
00544  4 01 37234     361            BRU     DISW
00545  0 40 20400     362   BPT1     BPT     1
00546  0 40 20200     363   BPT2     BPT     2
00547  0 40 20100     364   BPT3     BPT     3
00550  0 40 20040     365   BPT4     BPT     4
00551  67676701       366   TBL1     BCI     6,XXX1XXX2XXX3XXX4XXX5XXXX
00557  0 40 20400     367            BPT     1
00560  0 40 20200     368            BPT     2
00561  0 40 20100     369            BPT     3
00562  0 40 20040     370            BPT     4
00563  0 20 77772     371   M6       NOP*    -6
00564  0 72 00023     372            SKA     ZERO
00565  0 00 00000     373   AREG     PZE
00566  0 00 00000     374   BREG     PZE
00567  0 00 00000     375   XREG     PZE
00570  4 01 00052     376   BBB      BRU     LAST
00571  0 01 00000     377   BRU      BRU     0
00572  67676745       378   TBL      BCI     7,XXXNXXXAXXXIXXXSXXXDXXXRXXXB
```

```
00601  67676767        379            BCI     1,XXXX
00602  67676763        380            BCI     1,XXXT
00603  67676743        381            BCI     1,XXXL
00604  4 00 37424      382            PZE     NOP
00605  4 00 37234      383            PZE     ALTER1
00606  4 00 37372      384            PZE     INSERT
00607  4 00 37253      385            PZE     SNAP
00610  4 00 37214      386            PZE     DUMP
00611  4 00 37411      387            PZE     RESTOR
00612  4 00 37423      388            PZE     BRUTO
00613  4 00 37327      389            PZE     EXIT
00614  4 00 37713      390            PZE     TOGGLE
00615  4 00 37661      391            PZE     SERCH
00616  4 43 37274      392    BRMSN1  BRM     SNAP1
00617  62452147        393    SNAP2   BCI     1,SNAP
00620  12122112        394    SNAP3   BCI     3,  A   3   X
00623  77740000        395    SNAP5   OCT     77740000
00624  0 00 77775      396    M3      PZE     -3
00625  0 00 77774      397    M4      PZE     -4
00626  0 00 77766      398    M10     PZE     -10
00627  00000002        399    02      OCT     2
00630  00000004        400    04      OCT     4
00631  00000007        401    07      OCT     7
00632  00000033        402    033     OCT     33
00633  00000037        403    037     OCT     37
00634  0 00 00040      404    040     HLT     32
00635  00000070        405    070     OCT     70
00636  00000077        406    077     OCT     77
00637  52525252        407    052     OCT     52525252
00640  00000053        408    053     OCT     53
00641  00037770        409    037770  OCT     37770
           00642       410    LAST    EQU     *
00642  12121212        411    BLANK   OCT     12121212
                       412    CLA     OPD     07600023
            00002      413    IN01    BOOL    2
            00003      414    CT      BOOL    3
            00004      415    TO      BOOL    4
            00005      416    AAA     BOOL    5
            00006      417    PRCT    BOOL    6
            00007      418    T2      BOOL    7
            00010      419    CT1     BOOL    10
            00011      420    T1      BOOL    11
            00012      421    AAA1    BOOL    12
            00013      422    VALUE   BOOL    13
            00014      423    MASK    BOOL    14
            00023      424    ZERO    BOOL    23
            00024      425    ONE     BOOL    24
            00024      426    01      BOOL    24
            00025      427    SIGN    BOOL    25
            00026      428    ONES    BOOL    26
            00000      429            END
```

IDENTIFICATION: Paper Tape Reproducer Program

AUTHOR: A. W. England, SDS

ACCEPTED: 15 August 1963

COMPUTER CONFIGURATION: Any 910 or 920 with punch, reader, and typewriter.

PURPOSE: To reproduce binary paper tape. Only tapes which have an integral multiple of four characters in each block can be reproduced with this program.

PROGRAMMED OPERATORS: N/A

STORAGE: The program occupies 270_{10} locations from 200_8 to 616_8. The next 512 words are reserved for record table storage. The remainder of memory is used to hold the records of the tape to be reproduced.

TIMING: All operations proceed at the maximum rate of either the punch (60 characters per second) or the reader (300 characters per second).

USE:

I. TO LOAD PROGRAM

A. Insert tape in reader.

B. With COMPUTE switch in IDLE press START button.

C. Move COMPUTE switch to RUN.

D. Set BP 1.

E. Raise and lower FILL switch.

II. TO REPRODUCE A TAPE

A tape may be reproduced by first reading it, then verifying it, punching one or several copies of it, and finally verifying the copies. Each of these functions of the program will be described below. Upon

USE: (Cont)

completion of each function, control will be returned to the operator via the typewriter, which is signified by the illuminated typewriter light and the presence of 000001 in the I/O address lights.

A function is initiated by typing one control letter; R, V, or P. The letter P may be preceded by a number to indicate the number of copies to be made.

Below is the procedure for reproducing tapes:

A. Read

1. Place the tape to be reproduced in the reader.
2. RESET BP 1.
3. Type R.
4. When the tape runs out of the reader, SET BP 1.

B. Verify

1. Place the tape to be verified in the reader.
2. Reset BP 1.
3. If there is only one copy to be verified or if there are several copies to be verified one at a time, RESET BP 2.
4. Type V. The tape will be read and verified. If an error is found, the reader will stop at the end of the copy and the program will type VERIFY ERROR.
5. If several copies are to be verified at once, SET BP 2 and type V.

   When the tape runs out of reader or onto the the last length of trailer, SET BP 1.

C. Punch

After the tape has been read and verified, it may be punched as follows:

USE: (Cont)

1. If the tape is to have a short leader RESET BP 3. If it is to have a long leader (for mounting on a reel) SET BP 3.

2. If the tape is to have a short trailer, RESET BP 4. If it is to have a long trailer (for mounting on a reel), SET BP 4.

3. If only one copy is to be made, RESET BP 2 and type P. When the copy has been punched the light will come on.

4. If more than one copy is to be punched, SET BP 2 and type a carriage return, then the number of copies to be made, and the letter P. The program will punch the desired number of copies and stop. If it appears that there is not sufficient paper tape to punch all the copies, BP 2 may be RESET and the program will stop after the copy it is then punching.

D. Verify New Tape

Follow procedure as outlined in B above.

III. ERRORS

A. Reading

1. If a Read error occurs, the program will stop the tape and type READ ERROR.

2. If the tape to be reproduced exceeds the capacity of memory, the program will stop the tape and type STORAGE FULL.

3. If the tape to be reproduced has more than 512 blocks on it, the program will stop the tape and type TABLE FULL.

B. Verifying

If a copy fails verification, the program will stop the tape after that copy and type VERIFY ERROR.

IV. BREAKPOINTS

BP NO.	RESET	SET
1	Normal	Stop
2	One	Many
3	Short Leader	Long Leader
4	Short Trailer	Long Trailer

METHOD:

When a tape is read, the program records the gap length preceding the punched information and stores this in the record table. It also maintains the starting addresses of each record read. When Breakpoint 1 is set, the read is stopped and an end indicator is inserted in the table.

Verify is similar to read except that no attempt is made to verify the length of gaps. Each word of the record read from tape is compared with the corresponding word in memory. Any disagreement is indicated.

Punching utilizes the gap count generated during read to reproduce the proper length gaps between records. Each record is punched from memory with gaps as required. At the beginning and end of the tape the program punches either short (3 feet) or long (10 feet) leader depending on the settings of Breakpoints 3 and 4.

```
                                LIST                                PAPER TAPE REPRODUCER
00200  0 71 00027   BEGIN   LDX     SC5
00201  0 76 00026           LDA     SC4
00202  2 35 00000           STA     0.2
00203  2 72 00000           SKA     0.2
00204  0 01 00207           BRU     *+3
00205  2 77 34000           EAX     NEG2K.2
00206  0 01 00201           BRU     *-5
00207  0 37 00612           STX     LIMIT
00210  0 76 00244           LDA     R8
00211  0 35 00001           STA     1
00212  0 02 20004   ENTER   DIR
00213  0 02 00001           EOM     RKBW1
00214  0 32 00012           WIM     T
00215  0 76 00012           LDA     T
00216  0 75 00255           LDB     C4                  77
00217  0 70 00252           SKM     R
00220  0 01 00222           BRU     *+2                 NOT R
00221  0 01 00256           BRU     READ
00222  0 70 00253           SKM     P
00223  0 01 00225           BRU     *+2                 NOT P
00224  0 01 00373           BRU     PUNCH
00225  0 70 00254           SKM     V
00226  0 01 00230           BRU     *+2                 NOT V
00227  0 01 00471           BRU     VERIFY
00230  0 70 00247           SKM     CR
00231  0 01 00233           BRU     *+2                 NOT CR
00232  0 01 00245           BRU     CLEAR
00233  0 14 00255   DIGIT   ETR     C4                  ACCUMULATE DIGITS
00234  0 35 00012           STA     T
00235  0 46 30003           RCH     30003
00236  0 76 00250           LDA     PCNT
00237  0 67 00001           LSH     1
00240  0 55 00250           ADD     PCNT
00241  0 67 00001           LSH     1
00242  0 55 00012           ADD     T
00243  0 35 00250           STA     PCNT
00244  0 01 00212   R8      BRU     ENTER
00245  0 46 30003   CLEAR   RCH     30003               CLEAR PCNT
00246  0 01 00243           BRU     *-3
00247  00000052     CR      OCT     52
00250  0 00 00000   PCNT    PZE
00251  0 00 00000   RPCNT   PZE
00252  00000051     R       OCT     51
00253  00000047     P       OCT     47
00254  00000065     V       OCT     65
00255  00000077     C4      OCT     77
00256  0 76 00575   READ    LDA     R1                  SET INTERRUPTS
00257  0 75 00576           LDB     R2                  /
00260  0 35 00031           STA     I1W                 /BRU CONB
```

```
00261  0 36 00033          STB     I2W             /BRU I2RD
00262  0 76 00611          LDA     START           STARTING ADDRESS OF STORA
00263  0 35 00610          STA     ADDR
00264  0 35 00616          STA     TBL
00265  0 71 00574          LDX     TBLS            TABLE SIZE TO TBLC
00266  0 02 20002          EIR                     ENABLE INTERRUPT
00267  0 02 03604          EOM     RPTW4           START READER
00270  0 00 00000  WAITI1  HLT                     WAIT I1
00271  0 32 40610  CONB    WIM*    ADDR
00272  0 61 00610          MIN     ADDR
00273  0 76 00612          LDA     LIMIT
00274  0 73 00610          SKG     ADDR
00275  0 01 40323          BRU*    E3
00276  0 01 40277          BRU*    *+1
00277  0 00 00270          PZE     WAITI1
00300  0 40 20010  I2RD    SKS     SBEW
00301  0 01 40321          BRU*    E1
00302  0 32 00014          WIM     T+2
00303  0 76 00014          LDA     T+2
00304  0 72 00026          SKA     SC4
00305  0 01 40321          BRU*    E1
00306  0 41 00310          BRX     *+2             TBLC+1 TO TBLC
00307  0 01 40322          BRU*    E2
00310  0 76 00610          LDA     ADDR
00311  2 35 01616          STA     TBLE,2
00312  0 76 00577          LDA     R3              BRU CONA
00313  0 35 00031          STA     I1W
00314  0 76 00320          LDA     BIAS
00315  0 02 03604          EOM     RPTW4
00316  0 01 40317          BRU*    *+1
00317  0 00 00324          PZE     CONT
00320  77700000    BIAS    OCT     77700000
00321  0 00 00343  E1      PZE     ERR1
00322  0 00 00355  E2      PZE     ERR2
00323  0 00 00364  E3      PZE     ERR3
00324  0 55 00557  CONT    ADD     C1              00000200
00325  0 40 20400          SKS     BP1
00326  0 01 00336          BRU     STOP
00327  0 01 00324          BRU     *-3
00330  0 14 00560  CONA    ETR     C2              37700000
00331  2 16 01616          MRG     TBLE,2
00332  2 35 01616          STA     TBLE,2
00333  0 76 00575          LDA     R1
00334  0 35 00031          STA     I1W
00335  0 01 00271          BRU     CONB
00336  2 76 01616  STOP    LDA     TBLE,2
00337  0 16 00025          MRG     SC3
00340  2 35 01616          STA     TBLE,2
00341  0 02 00000          EOM     0
00342  0 01 00212          BRU     ENTER
```

```
00343  0 02 00000   ERR1   EOM    0
00344  0 02 20004          DIR
00345  0 02 03641          EOM    TYPW4
00346  0 12 00562          MIW    EM1                 CR REA
00347  0 12 00563          MIW    EM1+1               D SP ER
00350  0 12 00564          MIW    EM1+2               ROR CR
00351  0 02 14000   TOP    EOM    TOPW
00352  0 40 21000          SKS    SBRW
00353  0 01 00352          BRU    *-1
00354  0 01 00212          BRU    ENTER
00355  0 02 00000   ERR2   EOM    0
00356  0 02 20004          DIR
00357  0 02 03641          EOM    TYPW4
00360  0 12 00565          MIW    EM2                 CR TAB
00361  0 12 00566          MIW    EM2+1               LE SP F
00362  0 12 00567          MIW    EM2+2               U LL CR
00363  0 01 00351          BRU    TOP
00364  0 02 20004   ERR3   DIR
00365  0 02 03641          EOM    TYPW4
00366  0 12 00570          MIW    EM3                 CR STO
00367  0 12 00571          MIW    EM3+1               R AGE
00370  0 12 00572          MIW    EM3+2               SP FUL
00371  0 12 00573          MIW    EM3+3               L . . CR
00372  0 01 00351          BRU    TOP
00373  0 76 00250   PUNCH  LDA    PCNT
00374  0 54 00024          SUB    SC2
00375  0 35 00251          STA    RPCNT
00376  0 76 00600          LDA    R4
00377  0 35 00424          STA    SW1
00400  0 71 00574          LDX    TBLS
00401  2 76 01616          LDA    TBLE,2
00402  0 14 00027          ETR    SC5
00403  0 35 00610          STA    ADDR
00404  0 76 00614          LDA    SLC                 SHORT LEADER COUNT
00405  0 40 20100          SKS    BP3
00406  0 76 00613          LDA    LLC                 LONG LEADER COUNT
00407  0 02 20004          DIR
00410  0 14 00560   CONE   ETR    C2
00411  0 37 00012          STX    T
00412  0 02 01644   LOOP   EOM    PPTW4
00413  0 54 00561          SUB    C3
00414  0 72 00025          SKA    SC3
00415  0 01 00423          BRU    SW1-1
00416  0 71 00422          LDX    PWC
00417  0 35 00013          STA    T+1                 KILL TIME
00420  0 41 00417          BRX    *-1
00421  0 01 00412          BRU    LOOP
00422  000060000   PWC    OCT    60000
00423  0 71 00012          LDX    T
00424  0 20 00000   SW1    NOP
```

```
00425  2 76 01617          LDA     TBLE+1,2
00426  0 14 00027          ETR     SC5
00427  0 12 40610  BUT     MIW*    ADDR
00430  0 61 00610          MIN     ADDR
00431  0 73 00610          SKG     ADDR
00432  0 01 00434          BRU     *+2
00433  0 01 00427          BRU     BUT
00434  0 02 14000          EOM     TOPW
00435  0 41 00436          BRX     *+1
00436  0 40 21000          SKS     SBRW
00437  0 01 00436          BRU     *-1
00440  2 53 01616          SKN     TBLE,2
00441  0 01 00450          BRU     CONF                NOT DONE
00442  0 76 00601  CONC    LDA     R5                  DONE
00443  0 35 00424          STA     SW1                 S(SW1) BRU COND
00444  0 76 00614          LDA     SLC
00445  0 40 20040          SKS     BP4
00446  0 76 00613          LDA     LLC
00447  0 01 00410          BRU     CONE
00450  2 76 01616  CONF    LDA     TBLE,2
00451  0 14 00027          ETR     SC5
00452  0 35 00610          STA     ADDR
00453  2 76 01616          LDA     TBLE,2
00454  0 01 00410          BRU     CONE
00455  0 02 14000  COND    EOM     TOPW
00456  0 40 21000          SKS     SBRW
00457  0 01 00456          BRU     *-1
00460  0 40 20200          SKS     BP2
00461  0 01 00463          BRU     *+2
00462  0 01 00212          BRU     ENTER
00463  0 76 00251          LDA     RPCNT
00464  0 54 00024          SUB     SC2
00465  0 35 00251          STA     RPCNT
00466  0 72 00025          SKA     SC3
00467  0 01 00212          BRU     ENTER
00470  0 01 00376          BRU     PUNCH+3
00471  0 76 00602  VERIFY  LDA     R6                  BRU V1
00472  0 75 00603          LDB     R7                  BRU V2
00473  0 35 00031          STA     I1W
00474  0 36 00033          STB     I2W
00475  0 71 00574  CONTV   LDX     TBLS
00476  0 46 30003          RCH     30003
00477  0 35 00615          STA     VFLG                R(VFLG)
00500  2 76 01616          LDA     TBLE,2
00501  0 72 00025          SKA     SC3
00502  0 01 00543          BRU     VDONE
00503  0 14 00027          ETR     SC5
00504  0 35 00610          STA     ADDR
00505  0 75 00026  VLOOP   LDB     SC4
00506  0 02 03604          EOM     RPTW4
```

```
00507  0 02 20002          EIR
00510  0 40 20400  PAUSE   SKS     BP1
00511  0 01 00212          BRU     ENTER
00512  0 01 00510          BRU     *-2
00513  0 32 00016  V1      WIM     T+4
00514  0 76 00016          LDA     T+4
00515  0 70 40610          SKM*    ADDR
00516  0 36 00615          STB     VFLG
00517  0 61 00610          MIN     ADDR
00520  0 01 40521          BRU*    *+1
00521  0 00 00510          PZE     PAUSE
00522  0 32 00016  V2      WIM     T+4
00523  0 40 20010          SKS     SBEW
00524  0 36 00615          STB     VFLG
00525  0 76 00016          LDA     T+4
00526  0 72 00026          SKA     SC4
00527  0 36 00615          STB     VFLG
00530  0 76 00610          LDA     ADDR
00531  0 75 00027          LDB     SC5
00532  0 01 40533          BRU*    *+1
00533  0 00 00534          PZE     *+1
00534  2 70 01617          SKM     TBLE+1,2
00535  0 01 00540          BRU     V2A
00536  0 41 00500          BRX     CONTV+3
00537  0 01 00545          BRU     ERR4
00540  0 76 00026  V2A     LDA     SC4
00541  0 35 00615          STA     VFLG
00542  0 01 00536          BRU     *-4
00543  0 53 00615  VDONE   SKN     VFLG
00544  0 01 00554          BRU     VCONT
00545  0 02 20004  ERR4    DIR
00546  0 02 03641          EOM     TYPW4
00547  0 12 00604          MIW     EM4                     CR VER
00550  0 12 00605          MIW     EM4+1                   IFY SP
00551  0 12 00606          MIW     EM4+2                   ERRO
00552  0 12 00607          MIW     EM4+3                   R.. CR
00553  0 01 00351          BRU     TOP
00554  0 40 20200  VCONT   SKS     BP2
00555  0 01 00475          BRU     CONTV
00556  0 01 00212          BRU     ENTER
00557  00000100    C1      OCT     100
00560  37700000    C2      OCT     37700000
00561  00100000    C3      OCT     00100000
00562  52512521    EM1     OCT     52512521,24122551,51465152
00565  52632122    EM2     OCT     52632122,43251226,64434352
00570  52626346    EM3     OCT     52626346,51212725,12256443,433333e2
00574  77777000    TBLS    DEC     -512
00575  0 01 00271  R1      BRU     CONV
00576  0 01 00300  R2      BRU     I2RD
00577  0 01 00330  R3      BRU     CONA
```

```
00600  0 20 00000    R4      NOP
00601  0 01 00455    R5      BRU     COND
00602  0 01 00513    R6      BRU     V1
00603  0 01 00522    R7      BRU     V2
00604  52652551      EM4     OCT     52652551.31267012.25515146.51333352
00610  0 00 00000    ADDR    PZE
00611  0 00 01616    START   PZE     TBLE
00612  0 00 00000    LIMIT   PZE
00613  16000000      LLC     OCT     16000000
00614  04400000      SLC     OCT     04400000
00615  0 00 00000    VFLG    PZE
00616  0 00 00000    TBL     PZE
            01616    TBLE    EQU     TBL+512
            03604    RPTW4   OOOL    03604
            20010    SBEW    OOOL    20010
            20400    BP1     OOOL    20400
            20200    BP2     OOOL    20200
            20100    BP3     OOOL    20100
            20040    BP4     OOOL    20040
            00023    SC1     OOOL    23
            00024    SC2     OOOL    24
            00025    SC3     OOOL    25
            00026    SC4     OOOL    26
            00027    SC5     OOOL    27
            03641    TYPW4   OOOL    03641
            14000    TBPW    OOOL    14000
            21000    SBRW    OOOL    21000
            00012    T       OOOL    12
            01644    PPTW4   OOOL    01644
            00001    RKBW1   OOOL    00001
            34000    NEG2K   OOOL    34000
            00031    I1W     OOOL    31
            00033    I2W     OOOL    33
            00200            END     BEGIN
```

IDENTIFICATION: FORTRAN Memory Save

AUTHOR: Robert C. Shepardson, SDS

ACCEPTED: November 15, 1963

COMPUTER CONFIGURATION: Any 910 or 920 computer with paper tape reader and punch.

PURPOSE: To punch a self-loading paper tape representing the FORTRAN Program which is in core and optionally to punch any of the following:

1. The FORTRAN variables
2. COMMON
3. Run-Time.

PROGRAMMED OPERATORS: None.

STORAGE: 360 words (relocatable).

TIMING: Paper tape punch speed.

USE: Breakpoint switches 1, 2, and 3 are used as follows to designate the options desired:

BP 1	Reset - Don't punch variables Set - Punch variables
BP 2	Reset - Don't punch COMMON Set - Punch COMMON
BP 3	Reset - Don't punch Run-Time Set - Punch Run-Time

The routine is on a self-loading tape which loads itself into the topmost 360_{10} locations of eraseable storage. If there are not at least 360_{10} locations of eraseable storage available (as indicated by (72_8) in the Run-Time), the tape stops and the computer halts at location 16_8. The operator may then place a starting address P in the A register and clear the halt; the routine will then load itself into locations P through P+357_{10}.

USE: (Cont)

RELOADING

The procedure for resuming execution of the FORTRAN program (dumped on paper tape) depends upon whether or not the BP 3 option (punch Run-Time) was invoked.

A. Self-loading tape does not contain the Run-Time

1. Load FORTRAN Run-Time
2. Load self-loading FORTRAN program
3. Branch to location 400_8.

B. Self-loading tape includes the Run-Time

1. Load self-loading FORTRAN program. The computer will type "LOADING COMPLETE" and halt.
2. Clear the halt.

METHOD:

After being loaded, the FORTRAN Memory Save program will punch out a loader followed by the FORTRAN program and optionally the variables, COMMON and Run-Time. The following table defines precisely the locations which are punched:

Unconditionally	71 thru 75_8	EOADR, EOSIZE, EOTAG, EOIND, SENWRD
	160_8 thru 247_8	User POPS and System Routine Linkages
Program without variables (BP 1 reset)	$(400_8)-10_8$ thru (EOADR)-1 but not including the dummies, temporaries, equivalenced variables, arrays and scalars (see Memory Layout at Run-Time, FORTRAN Operators Manual).	
Program with variables (BP 1 set)	$(400_8)-10_8$ thru (EOADR)-1	

METHOD: (Cont)	COMMON (BP 2 set)	(EOADR) + (EOSIZE) thru Top of Memory
	Run-Time (BP 3 set)	1 76_8 thru 157_8 250_8 thru $(400_8)-10_8$

```
                                  FART    RELOCATABLE LOADER INTO ERASABLE
                                *         11-1-63
00000          00002              BSS     2
00002  2 32 00012          START   WIM     10,2
00003  0 41 00002                  BRX     START
00004  0 71 00007                  LDX     NOP
00005  2 32 00071          WIM     WIM     LAST,2
00006  0 41 00005                  BRX     WIM
00007  0 20 77721          NOP     NOP*    -LAST+10
00010  0 76 00072          CHECK   LDA     EOSIZE
00011  0 54 00070                  SUB     PRSIZE
00012  0 72 00025                  SKA     SIGN
00013  0 01 00016                  BRU     109
00014  0 55 00071          FITS    ADD     EOADR
00015  0 01 00017                  BRU     FOO
00016  0 00 40000          109     HLT*
00017  0 35 00006          FOO     STA     RELADR
00020  0 16 00263                  MRG     BRUMOP
00021  0 35 00002                  STA     JUMP
00022  0 01 00030                  BRU     24
00023  0 00 00000          ZERO    PZE
00024  00000001            ONE     DEC     1
00025  40000000            SIGN    OCT     40000000
00026  77777777            ONES    DEC     -1
00027  00037777            ADRMSK  OCT     37777
00030  0 02 00604          BLOCK   EOM     604
00031  0 32 00003                  WIM     ID2
00032  0 32 00003                  WIM     ID2
00033  0 76 00003                  LDA     ID2
00034  0 17 00016                  EOR     109
00035  0 72 00016                  SKA     109
00036  0 55 00006                  ADD     RELADR
00037  0 14 00027                  ETR     ADRMSK
00040  0 35 00005                  STA     COUNT
00041  0 55 00067                  ADD     EAX
00042  0 35 00062                  STA     MODIFY
00043  0 76 00003                  LDA     ID2
00044  0 32 00004          READ    WIM     WORD
00045  0 40 21000                  SKS     21000
00046  0 01 00056                  BRU     STORE
00047  0 75 00005          ENDBLK  LDB     COUNT
00050  0 17 00016                  EOR     109
00051  0 72 00016                  SKA     109
00052  0 36 00006                  STB     RELADR
00053  0 72 00077                  SKA     TAGBIT
00054  0 01 00030                  BRU     BLOCK
00055  0 01 00002                  BRU     JUMP
00056  0 71 00004          STORE   LDX     WORD
00057  0 72 00025                  SKA     SIGN
00060  0 53 00004                  SKN     WORD
```

```
00061  0 01 00063      51            BRU     NØREL
00062  2 77 00000      52   MØDIFY   EAX     0,2
00063  0 37 40005      53   NØREL    STX*    CØUNT
00064  0 61 00005      54            MIN     CØUNT
00065  0 61 00062      55            MIN     MØDIFY
00066  0 01 00044      56            BRU     READ
00067  2 77 00000      57   EAX      EAX     0,2
00070  00000550        58   PRSIZE   ØCT     550
            00002      59   JUMP     BØØL    2
            00003      60   ID2      BØØL    3
            00004      61   WØRD     BØØL    4
            00005      62   CØUNT    BØØL    5
            00006      63   RELADR   BØØL    6
            00071      64   EOADR    BØØL    71
            00072      65   EOSIZE   BØØL    72
            00077      66   TAGBIT   BØØL    77
            00263      67   BRUMØP   BØØL    263
            00071      68   LAST     EQU     *
            00000      69            END
```

```
                                *                   FORTRAN MEMORY SAVE  R C SHEPARDSON
                                *                   11-1-63
                                *                   SW1 SET - PUNCH VARIABLES
                                *                   SW2 SET - PUNCH COMMON
                                *                   SW3 SET - PUNCH RUN TIME
                                *
                                *
                00023           ZERO    BOOL        23
                00024           ONE     BOOL        24
                00071           EOA     BOOL        71
                00072           EOS7    BOOL        72
                00071           EOA     EQU         EOA
                00071           EOADR   EQU         EOA
                00072           EOS7    EQU         EOS7
                00400           MPS     BOOL        400
                                CLA     OPD         7600023
                                CLB     OPD         7500023
                                MDC     OPD         6000000
                                CAX     MACRO
                                        STA         2
                                        LDX         2
                                        ENDM
                                CXA     MACRO
                                        STX         2
                                        LDA         2
                                        ENDM
                                CNA     MACRO
                                        FOR         ONES
                                        ADD         ONE
                                        ENDM
                00026           ONES    BOOL        26
                                ADC     OPD         5500000
                                SKR     MACRO       A
                                        MDC         A
                                        NOP
                                        SKN         A
                                        ENDM
                                *
                                        REL
                00000                   ORG         0
                                *                                       PUNCH LOADER
00000   4 71 00411              START   LDX         M62
00001   0 40 21000                      BRTW
00002   4 01 37777                      BRU         *-1
00003   0 02 00644                      PTLW        1.4
00004   6 12 00505                      MIW         LOAD+62.2
00005   4 41 37777                      BRX         *-1
00006   0 02 14000                      TOPW
00007   4 76 00502                      LDA         =4                  DUMP 71-75 UNCO
00010   4 71 00502                      LDX         =940071
```

```
000011  4 43 000167      51          BRM     DUMP
000012  4 71 000501      52          LDX     =A40160
000013  4 76 000501      53          LDA     =A67
000014  4 43 000164      54          BRM     DUMP
                         55  *                                   DETERMINE MSIZ
000015  4 76 000500      56          LDA     =2
000016  4 35 000253      57          STA     TEMP
000017  4 71 000477      58          LDX     =A37777
000020  2 77 100000      59  P1      FAX     4096,2
000021  2 75 100000      60          LDB     4096,2
000022  2 35 100000      61          STA     4096,2
000023  0 72 000026      62          SKA     BNE
000024  4 01 000002      63          BRU     *+2
000025  4 01 000007      64          BRU     P2
000026  2 36 100000      65          STB     4096,2
                         66          SKR     TEMP
000027  4 60 000242                  MDC     A
000030  0 20 000000                  NOP
000031  4 53 000240                  SKN     A
000032  4 01 377766      67          BRU     P1
000033  2 77 100000      68          FAX     4096,2
000034  4 37 000252      69  P2      STX     MSIZE
                         70  *                                   DUMP PROGRAMS
000035  0 40 200400      71          BPT     1
000036  4 01 000003      72          BRU     P4
000037  4 43 000047      73          BRM     PNVAR
000040  4 01 000002      74          BRU     *+2
000041  4 43 000027      75  P4      BRM     PVAR
000042  0 40 200200      76          BPT     2
000043  4 43 000104      77          BRM     PCAM
000044  0 40 200100      78          BPT     3
000045  4 43 000116      79          BRM     PRUNT
000046  4 76 000020      80          LDA     BRUTB1
000047  0 35 000006      81          STA     6
000050  0 35 000007      82          STA     7
000051  0 76 000023      83          CLA
000052  0 40 200100      84          BPT     3
000053  4 01 000002      85          BRU     *+2
000054  0 35 000006      86          STA     6
000055  0 76 000024      87          LDA     BNE
000056  4 71 000011      88          LDX     AAA
000057  4 43 000121      89          BRM     DUMP
000060  0 40 210000      90          BPTW
000061  4 01 377777      91          BRU     *-1
000062  0 02 002641      92          TYPW    1,4
000063  4 12 000434      93          MIW     =A52254524
000064  0 02 140000      94          TAPW
000065  0 00 000000      95          HLT                         FINISHED
000066  0 01 000001      96  BRUTB1  BRU     1
000067  0 00 400006      97  AAA     P7E*    6
```

```
                                 98    *
                                 99    *
                                100    *                                    PUNCH ALL OF P
00070   0 00 00000              101    PVAR    PZE
00071   0 76 00400              102            LDA     MPS
00072   4 16 00426              103            MRG     =040000
                                104            CAX
00073   0 35 00002                           STA     2
00074   0 71 00002                           LDX     2
00075   4 14 00421              105            ETR     =037777
00076   4 35 00173              106            STA     TEMP
00077   0 76 00071              107            LDA     EOA
00100   4 14 00416              108            ETR     =037777
00101   4 54 00170              109            SUB     TEMP
00102   4 55 00417              110            ADD     =7
00103   2 77 37770              111            EAX     -8.2
00104   4 43 00074              112            BRM     DUMP
00105   4 51 37763              113            BRR     PVAR
                                114    *                                    PUNCH NO VARIA
00106   0 00 00000              115    PNVAR   PZE
00107   0 76 00071              116            LDA     EOADR
00110   4 14 00406              117            ETR     =037777
00111   4 54 00411              118            SUB     =1
00112   4 35 00276              119            STA     BETA
00113   0 76 00400              120            LDA     MPS
00114   4 14 00402              121            ETR     =037777
00115   4 54 00406              122            SUB     =8
00116   4 35 00271              123            STA     ALPHA
00117   4 16 00401              124            MRG     =040000
                                125            CAX
00120   0 35 00002                           STA     2
00121   0 71 00002                           LDX     2
00122   2 76 00004              126    PNVAR1  LDA     4.2
00123   4 54 00377              127    PNVAR2  SUB     =1
00124   4 54 00263              128            SUB     ALPHA
00125   4 43 00053              129            BRM     DUMP
00126   4 71 00261              130            LDX     ALPHA
00127   2 76 00000              131           *LDA     .2
00130   4 14 00366              132            ETR     =037777
00131   4 73 00257              133            SKG     BETA
00132   4 01 00002              134            BRU     *+2
00133   4 51 37753              135            BRR     PNVAR
00134   4 35 00253              136            STA     ALPHA
00135   4 16 00363              137            MRG     =040000
                                138            CAX
00136   0 35 00002                           STA     2
00137   0 71 00002                           LDX     2
00140   2 76 00000              139           *LDA     .2
00141   4 72 00363              140            SKA     =010000000
00142   4 01 00002              141            BRU     *+2
```

```
00143  4 01 37757     142          BRU     PNVAR1
00144  2 76 00000     143         *LDA     .2
00145  4 14 00351     144          ETR     =837777
00146  4 01 37755     145          BRU     PNVAR2
                       146  *                                  PUNCH COMMON
00147  0 00 00000     147  PCOM    P7E
00150  0 76 00071     148          LDA     E88A
00151  0 55 00072     149          ADD     E887
00152  4 16 00346     150          MRG     =840000
                       151          CAX
00153  0 35 00002                  STA     2
00154  0 71 00002                  LDX     2
00155  4 17 00350     152          ERR     =877737777
00156  0 55 00024     153          ADD     BNE
00157  4 55 00227     154          ADD     WRITE
00160  4 14 00336     155          ETR     =837777
00161  4 43 00017     156          BRM     DUMP
00162  4 51 37765     157          BRR     PCOM
                       158  *                                  PUNCH RUN TIME
00163  0 00 00000     159  PRUNT   P7E
00164  4 71 00342     160          LDX     =840001
00165  0 76 00023     161          CLA
00166  4 43 00012     162          BRM     DUMP
00167  4 71 00340     163          LDX     =840076
00170  4 76 00340     164          LDA     =40
00171  4 43 00007     165          BRM     DUMP
00172  4 71 00337     166          LDX     =840250
00173  0 76 00400     167          LDA     MQS
00174  4 54 00336     168          SUB     =176
00175  4 14 00321     169          ETR     =837777
00176  4 43 00002     170          BRM     DUMP
00177  4 51 37764     171          BRR     PRUNT
                       172  *       DUMP
                       173  *       INPUT X = ORIGIN BIT0 = 1
                       174  *       CT = COUNT - 1
                       175  *
00200  0 00 00000     176  DUMP    P7E
00201  4 35 00071     177          STA     CT
00202  0 75 00024     178          LDB     BNE
00203  4 36 00060     179          STB     QUEO
00204  0 76 00023     180          CLA
00205  4 35 00060     181          STA     ZCT
00206  4 35 00060     182          STA     NZCT
00207  4 37 00060     183          STX     ORG
00210  0 75 00026     184  NEXT    LDB     BNEO
00211  2 70 00000     185          SKM     0,2
00212  4 01 00010     186          BRU     N7
00213  4 61 00052     187          MIN     ZCT
                       188          SKR     CT
00214  4 60 00056                  MDC     A
```

```
00215  0 20 00000                    NOP
00216  4 53 00054                    SKN     A
00217  4 41 37771      199           BRX     NEXT
00220  0 75 00023      200           CLB
00221  4 36 00042      201           STB     QUES
00222  4 76 00043      202   NZ      LDA     ZCT
00223  4 73 00041      203           SKG     CA
00224  4 01 00022      204           BRU     LT9                    LESS THAN 9
00225  4 37 00044      205           STX     TEMP
00226  4 71 00041      206           LDX     BRG
00227  4 76 00037      207           LDA     NZCT
00230  4 43 00102      208           BRM     PPT
00231  4 76 00036      209           LDA     BRG
00232  4 55 00034      210           ADD     NZCT
                       211           CAX
00233  0 35 00002                    STA     2
00234  0 71 00002                    LDX     2
00235  4 76 00030      212           LDA     ZCT
00236  4 43 00035      213           BRM     PPTS
00237  4 71 00032      214           LDX     TEMP
00240  4 37 00027      215           STX     BRG
00241  0 76 00023      216           CLA
00242  4 35 00023      217           STA     ZCT
00243  4 75 00020      218           LDB     QUES
00244  4 36 00022      219           STB     NZCT
00245  4 01 00006      220           BRU     LT9A
00246  4 55 00015      221   LT9     ADD     QUES
00247  4 55 00017      222           ADD     NZCT
00250  4 35 00016      223           STA     NZCT
00251  0 76 00023      224           CLA
00252  4 35 00013      225           STA     ZCT
                       226   LT9A    SKR     CT
00253  4 60 00017                    MDC     A
00254  0 20 00000                    NOP
00255  4 53 00015                    SKN     A
00256  4 41 37732      227           BRX     NEXT
00257  4 71 00010      228           LDX     BRG
00260  4 76 00006      229           LDA     NZCT
00261  4 43 00051      230           BRM     PPT
00262  4 51 37716      231           BRR     DUMP
00263  0 00 00000      232   QUES    PZE
00264  00000010        233   CB      DEC     8
00265  0 00 00000      234   ZCT     PZE
00266  0 00 00000      235   NZCT    PZE
00267  0 00 00000      236   BRG     PZE
00270  0 00 00000      237   TEMP1   PZE
00271  0 00 00000      238   TEMP    PZE
00272  0 00 00000      239   CT      PZE
00273  0 00 00000      240   PPTS    PZE
00274  4 35 00110      241   PPTS1   STA     TEMP2
```

```
                                 232          SKR     TEMP2
00275   4 60 00107                            MDC     A
00276   0 20 00000                            NOP
00277   4 53 00105                            SKN     A
00300   4 01 00002               233          BRU     *+2
00301   4 51 37772               234          BRR     PPTS
00302   4 76 00102               235          LDA     TEMP2
00303   4 73 00230               236          SKG     =255
00304   4 01 00002               237          BRU     *+2
00305   4 76 00226               238          LDA     =255
00306   0 67 00017               239          LSH     15
00307   4 14 00225               240          ETR     =0377000000
00310   4 35 00073               241          STA     TEMP3
                                 242          CXA
00311   0 37 00002                            STX     2
00312   0 76 00002                            LDA     2
00313   4 14 00222               243          ETR     =077777
00314   4 16 00067               244          MRG     TEMP3
00315   4 35 00066               245          STA     TEMP3
00316   0 40 21000               246          BRTW
00317   4 01 37777               247          BRU     *-1
00320   0 02 00644               248          PTLW    1,4
00321   4 12 00062               249          MIW     TEMP3
00322   4 12 00061               250          MIW     TEMP3
00323   0 02 14000               251          TBPW
00324   4 76 00060               252          LDA     TEMP2
00325   4 54 00206               253          SUB     =255
00326   4 73 00210               254          SKG     =0
00327   4 51 37744               255          BRR     PPTS
00330   2 77 00400               256          EAX     256,2
00331   4 01 37743               257          BRU     PPTS1
00332   0 00 00000               258  PPT     PZE
00333   0 54 00024               259          SUB     ONE
00334   4 73 00203               260          SKG     =-1
00335   4 51 37775               261          BRR     PPT
00336   0 40 21000               262          BRTW
00337   4 01 37777               263          BRU     *-1
00340   0 75 00023               264          CLB
00341   4 35 00043               265          STA     TEMP2
00342   4 76 00171               266          LDA     =255
00343   4 73 00041               267          SKG     TEMP2
00344   4 01 00002               268          BRU     *+2
00345   4 76 00037               269          LDA     TEMP2
00346   4 35 00034               270          STA     TEMP4
00347   0 67 00017               271          LSH     15
00350   4 16 00170               272          MRG     =0400000000
00351   4 14 00170               273          ETR     =077740000
00352   4 35 00031               274          STA     TEMP3
                                 275          CXA
00353   0 37 00002                            STX     2
```

```
00354  0 76 00002                    LDA     2
00355  4 14 00160     276            ETR     =077777
00356  4 16 00025     277            MRG     TEMP3
00357  4 35 00024     278            STA     TEMP3
00360  0 02 00644     279            PTCW    1.4
00361  4 12 00022     280            MIW     TEMP3
00362  4 55 00154     281            ADC     =0                      RESET CARRY IND
00363  4 76 00020     282            LDA     TEMP3
00364  2 12 00000     283   PPT25    MIW     0,2
00365  2 55 00000     284            ADC     0,2
               0     285            SKR     TEMP4
00366  4 60 00014                    MDC     A
00367  0 20 00000                    NOP
00370  4 53 00012                    SKN     A
00371  4 41 37773     286            BRX     PPT25
00372  4 55 00144     287            ADC     =0
00373  4 35 00007     288            STA     TEMP4
00374  4 12 00006     289            MIW     TEMP4
00375  0 02 14000     290            TSPW
00376  4 76 00006     291            LDA     TEMP2
00377  4 54 00143     292            SUB     =256
00400  4 41 37734     293            BRX     PPT+2
00401  4 51 37731     294            BRR     PPT
00402  0 00 00000     295   TEMP4    PZE
00403  0 00 00000     296   TEMP3    PZE
00404  0 00 00000     297   TEMP2    PZE
00405  4 00 40006     298   LOADA    PZE*    LOAD
00406  0 00 00000     299   MSIZE    PZE
00407  0 00 00000     300   ALPHA    PZE
00410  0 00 00000     301   BETA     PZE
00411  0 00 77702     302   M62      PZE*    -62
00412  0 00 77703     303   M61      PZE     -61
               304   *               FORTRAN RECOVERY LOADER - R C SHEPA
               305   *
               306   *               INPUT - CW, N WORDS ADC CHECKSUM
               307   *               CW0 =0 THEN LOAD ZEROES INTO MEMORY
               308   *               CW1-8 = COUNT -1
               309   *               CW9   = 1
               310   *               CW10-23 = ORIGIN
               311   *               STOP 5 - PARITY OR CHECKSUM ERROR
               312   *
               313   *               USES LOCAZ
               314   *               USES LOCATIONS 0,2-70 OCTAL - MAINT
               315   *
               316   *
               317   *
               318   *
               319   *               OR LOAD HLT OR BRU INTO LOC 6
               320   *               WHICH BEGINS LOOP FOR EACH RECORD
               321   *
```

```
                          322   *
                00413     323   LBAD   EQU    *
00413   2 32 00012         324          WIM    10.2                2
00414   0 41 00002         325          BRX    2                   3
00415   0 71 00007         326          LDX    7                   4
00416   0 32 00002         327          WIM    2                   5
00417   0 01 00002         328          BRU    2                   6
00420   0 00 77713         329          PZE*   -53                 7
00421   0 00 00000         330          PZE                        8
00422   0 00 00000         331          PZE                        9
00423   2 32 00071         332          WIM    57.2                2
00424   0 40 20010         333          BETW                       4
00425   0 01 00065         334          BRU    53                  5
00426   0 40 21000         335          BRTW                       6
00427   0 01 00006         336          BRU    6                   7
00430   0 02 02604         337          RPTW   1.4                 8
00431   0 43 00046         338          BRM    38                  9
00432   0 35 00002         339          STA    2                   10
00433   0 71 00002         340          LDX    2                   11
00434   0 14 00022         341          ETR    18                  12
00435   0 66 00017         342          RSH    15                  13
00436   0 17 00026         343          FBR    22                  14
00437   0 35 00003         344          STA    3                   15
00440   0 75 00026         345          LDB    22                  16
00441   0 01 00030         346          BRU    24                  17
00442   37700000           347          ACT    37700000            18
00443   0 00 00000         348          PZE                        19
00444   0 00 00001         349          PZE    1                   20
00445   40000000           350          ACT    40000000            21
00446   77777777           351          ACT    77777777            22
00447   00037777           352          ACT    37777               23
00450   0 53 00002         353          SKN    2                   24
00451   0 01 00054         354          BRU    44                  25
00452   0 53 00003         355          SKN    3                   26
00453   0 01 00042         356          BRU    34                  27
00454   0 43 00046         357          BRM    38                  28
00455   2 35 00000         358          STA    0.2                 29
00456   0 55 00002         359          ADD    2                   30
00457   0 35 00002         360          STA    2                   31
00460   0 61 00003         361          MIN    3                   32
00461   0 41 00032         362          BRX    26                  33
00462   0 43 00046         363   U      BRM    38                  34
00463   0 70 00002         364          SKM    2                   35
00464   0 01 00005         365          BRU    5                   36
00465   0 01 00004         366          BRU    4                   37
00466   0 00 00000         367          PZE                        38      GNW SUBR
00467   0 32 00000         368          WIM    0                   39
00470   0 40 20010         369          BETW                       40
00471   0 01 00005         370          BRU    5                   41
00472   0 76 00000         371          LDA    0                   42
```

```
00473  0 51 00046     372        BPR     38          43
00474  0 43 00046     373        BRM     38          44
00475  0 70 00002     374        SKM     2           45
00476  0 01 00005     375        BRU     5           46
00477  0 76 00023     376        LDA     19          47
00500  2 35 00000     377        STA     0,2         48
00501  0 61 00003     378        MIN     3           49
00502  0 53 00003     379        SKN     3           50
00503  0 01 00004     380        BRU     4           51
00504  0 41 00060     381        BRX     48          52
00505  0 02 00000     382        DISW                53
00506  0 00 00000     383        HLT                 54        CHECK SU
00507  0 01 00006     384        BRU     6           55
00510  0 00 00000     385        HLT                 56        NOT USED
       0 00 00000     386        END     START
00511  00000004
00512  00040071
00513  00040160
00514  00000067
00515  00000002
00516  00037777
00517  52254524
00520  00040000
00521  00000007
00522  00000001
00523  00000010
00524  10000000
00525  77737777
00526  00040001
00527  00040076
00530  00000061
00531  00040250
00532  00000260
00533  00000377
00534  37700000
00535  00077777
00536  00000000
00537  77777777
00540  40000000
00541  77740000
00542  00000400
```

IDENTIFICATION: Card Reader Test Program

AUTHOR: F. Valadez, SDS

ACCEPTED: 10 May 1963

COMPUTER CONFIGURATION: Any SDS 920 or SDS 910 with a typewriter, and SDS Model 9151 card reader.

PURPOSE: To provide an acceptance test for the SDS 9151 card reader.

PROGRAMMED OPERATORS: None

STORAGE: Octal locations 200-613 (268 words).

TIMING: Not applicable.

USE: The Card Reader Test Program consists of a self-loading paper tape and a special 64-card test deck. The card deck is sequentially numbered and must be in correct order to run the test.

To perform the card reader test, proceed as follows:

1. Load the program by normal Fill procedure. When the program is loaded the computer will halt.

2. Check the test deck for correct sequencing of cards.

3. Select either the binary or Hollerith test by means of Breakpoint Switch 1.

   BP 1 set: Hollerith read test

   BP 1 reset: Binary read test

4. Load the test deck and turn on the EOF ON indicator.

5. Clear the computer halt to start the test.

Normal Run

If the test deck reads through successfully one of the following messages will be typed out, depending on the mode selected: "Binary test complete" or "Hollerith

JSE: (cont.) test complete". The computer will then halt. At this time the test deck may be reloaded and the program repeated by clearing the halt.

Note: During the Hollerith read test, the VALIDITY CHECK light will be on continuously.

Error Indication

If an error occurs during the test, a message will be typed and the computer will halt. If an error halt occurs, the entire program must be restarted.

The following error messages are possible:

1. BIN check error:

   The binary check character (52522525) read from columns 1 and 2 of the last card is not correct. The A register contains the pattern read from the card while the B register contains the value which should have been read.

2. HOL check error:

   Either the Hollerith character (T) read from column 3 is not correct or a validity check has occurred while reading it. The A register contains the binary-coded value of the Hollerith character read from the card while the B register contains the value which should have been read.

3. IDN check error:

   The identification number read from the last card does not sequentially follow that of the preceding card. The A register contains the sequence number read from the card while the B register contains the expected sequence number.

4. Error in column N:

   The information read from the particular card column is not correct. For the binary test, the A register contains the binary pattern read from the card, while the B register contains the pattern which should have been read. For the Hollerith test, the A register contains the Hollerith value read from the card, while the B register contains the binary pattern that should be in that card column.

USE: (cont.)

5. Signal not present:

At certain places, the program tests for the presence of the following signals:

Card Reader ready to feed (SKS 12006)

Card Reader ready to read one column (SKS 14006)

The program will loop before continuing until the particular signal is received. Upon terminating the test, the Card Reader end-of-file signal (SKS 11006) is tested.

METHOD:

Each card in the test deck contains the following fields:

1. Binary check character (columns 1 and 2.)
2. Hollerith check character (column 3).
3. Identification number (columns 4 and 5).
4. Test data (columns 8 through 71)

Columns 6, 7, and 72-80 are blank.

The test data contains every possible columnwise combination of punches arranged in ascending binary order. Column binary information is read from top to bottom, where the 12-row is the most significant bit and the 9-row is the least significant bit.

Each field on the card is read and interpreted for correctness as follows:

1. Columns 1 and 2 are read in the binary mode and form a check character whose octal value is 52522525.
2. Column 3 is read in the Hollerith mode and is the letter "T". The octal value is 63.
3. Columns 4 and 5 are read in Hollerith and converted to binary by the program to form the card identification number. This number is then checked for correct sequence.
4. Binary test: Columns 8 through 71 are read in the binary mode, one column at a time. Each column is checked against an internal binary counter. Between columns, the W buffer is disconnected and the program waits for Card Reader ready (SKS 12006) before reading the next column.

METHOD: (cont.)

Hollerith test: Columns 8 through 71 are read in the Hollerith mode, one column at a time. The octal value read from a particular column is used to select a binary pattern from a table. This value is compared with the internal binary counter pattern. The two patterns should match for valid Hollerith characters and not match for non-valid Hollerith characters. The validity error signal should be set for non-valid Hollerith characters.

```
* CARD READER CHECKOUT PROGRAM
*
* BP1 RESET FOR BINARY READ TEST.
* BP1 SET FOR HOLLERITH READ TEST
*
00200  0 02 20004          DIR
00201  0 46 30003          CLR
00202  0 35 00607          STA     SUM
00203  0 35 00610          STA     CARD
00204  0 61 00610          MIN     CARD
00205  0 40 12006  START    SKS     12006          READY TO FEED
00206  0 01 00272          BRU     EFT
*
00207  0 02 03606          RCBW    1,4            READ BINARY
00210  0 32 00611          WIM     TEMP           CHECK CHARACTER
00211  0 76 00611          LDA     TEMP
00212  0 75 00472          LDB     ONES
00213  0 70 00470          SKM     BC
00214  0 01 00345          BRU     ERR1
*
00215  0 02 02006          RCDW    1,1            READ HOLLERITH
00216  0 32 00611          WIM     TEMP           CHECK CHARACTER
00217  0 40 20010          BETW
00220  0 01 00350          BRU     ERR2
00221  0 76 00611          LDA     TEMP
00222  0 14 00466          ETR     077
00223  0 70 00471          SKM     HC
00224  0 01 00350          BRU     ERR2
*
00225  0 32 00611          WIM     TEMP           FORM CARD I.D.
00226  0 76 00611          LDA     TEMP
00227  0 14 00466          ETR     077
00230  0 75 00456          LDB     C0
00231  0 67 00001          LSH     1
00232  0 35 00611          STA     TEMP
00233  0 67 00002          LSH     2
00234  0 55 00611          ADD     TEMP
00235  0 35 00612          STA     TEMP&1
00236  0 32 00611          WIM     TEMP
00237  0 76 00611          LDA     TEMP
00240  0 14 00466          ETR     077
00241  0 55 00612          ADD     TEMP&1
00242  0 75 00472          LDB     ONES
00243  0 70 00610          SKM     CARD
00244  0 01 00353          BRU     ERR3
00245  0 32 00611          WIM     TEMP
00246  0 32 00611          WIM     TEMP
00247  0 40 20400          BPT     1
00250  0 01 00275          BRU     HREAD-2
*
```

```
* BINARY READ TEST
*
00251  0 71 00465          LDX     DM64
00252  0 02 03206  BREAD   RCBW    1,2
00253  0 02 00000          EOM     0
00254  0 40 14006          SKS     14006          READY TO READ
00255  0 01 00254          BRU     *-1
00256  0 02 03206          RCBW    1,2
00257  0 32 00611          WIM     TEMP
00260  0 40 20010          BETW
00261  0 01 00357          BRU     ERR4
00262  0 76 00611          LDA     TEMP
00263  0 14 00467          ETR     07777
00264  0 70 00607          SKM     SUM
00265  0 01 00357          BRU     ERR4
00266  0 61 00607          MIN     SUM
00267  0 41 00252          BRX     BREAD
00270  0 02 12006          EOM     12006          SKIP REMAINDER
00271  0 61 00610          MIN     CARD
00272  0 40 11006  EFT     SKS     11006          SKIP IF NOT EOF
00273  0 01 00327          BRU     EXIT
00274  0 01 00205          BRU     START
*
* HOLLERITH READ TEST
*
00275  0 75 00472          LDB     ONES
00276  0 71 00465          LDX     DM64
00277  0 02 02006  HREAD   RCDW    1,1
00300  0 02 00000          EOM     0
00301  0 40 14006          SKS     14006          READY TO READ
00302  0 01 00301          BRU     *-1
00303  0 02 02006          RCDW    1,1
00304  0 32 00611          WIM     TEMP
00305  0 76 00611          LDA     TEMP
00306  0 14 00466          ETR     077
00307  0 35 00611          STA     TEMP
00310  0 37 00606          STX     TX
00311  0 71 00611          LDX     TEMP
00312  2 76 00505          LDA     HTABLE,2
00313  0 71 00606          LDX     TX
00314  0 70 00607          SKM     SUM
00315  0 01 00324          BRU     T
00316  0 40 20010          BETW
00317  0 01 00356          BRU     ERR4A
00320  0 61 00607          MIN     SUM
00321  0 41 00277          BRX     HREAD
00322  0 02 00000          EOM     0
00323  0 01 00271          BRU     EFT-1
00324  0 40 20010  T       BETW
00325  0 01 00320          BRU     *-5
```

```
00326  0 01 00356          BRU     ERR4A
00327  0 02 02641  EXIT    TYPW    1,4                    DONE MESSAGES
00330  0 40 20400          BPT     1
00331  0 01 00341          BRU     *&8
00332  0 12 00445          MIW     MSG10
00333  0 12 00446          MIW     MSG10&1
00334  0 71 00462          LDX     DM4
00335  2 12 00456          MIW     MSG15&4,2
00336  0 41 00335          BRX     *-1
00337  0 00 00000          HLT
00340  0 01 00200          BRU     START-5
00341  0 12 00447          MIW     MSG11
00342  0 12 00450          MIW     MSG11&1
00343  0 12 00451          MIW     MSG11&2
00344  0 01 00334          BRU     *-8
00345  0 71 00427  ERR1    LDX     MSG1
00346  0 75 00470          LDB     BC
00347  0 01 00412          BRU     TYPE
00350  0 71 00430  ERR2    LDX     MSG2
00351  0 75 00471          LDB     HC
00352  0 01 00412          BRU     TYPE
00353  0 71 00431  ERR3    LDX     MSG3
00354  0 75 00610          LDB     CARD
00355  0 01 00412          BRU     TYPE
00356  0 76 00611  ERR4A    LDA     TEMP
00357  0 35 00605  ERR4    STA     TA
00360  0 46 30003          CLR
00361  0 35 00613          STA     TEMP&2
00362  0 76 00461          LDA     D72
00363  0 37 00606          STX     TX
00364  0 55 00606          ADD     TX
00365  0 73 00457          SKG     D9
00366  0 01 00372          BRU     *&4
00367  0 54 00460          SUB     D10
00370  0 61 00613          MIN     TEMP&2
00371  0 01 00365          BRU     *-4
00372  0 35 00606          STA     TX
00373  0 71 00613          LDX     TEMP&2
00374  2 75 00473          LDB     CTABLE,2
00375  0 67 00006          LSH     6
00376  0 71 00606          LDX     TX
00377  2 75 00473          LDB     CTABLE,2
00400  0 67 00022          LSH     18
00401  0 35 00443          STA     MSG5&4
00402  0 71 00464          LDX     DM6
00403  0 02 02641          TYPW    1,4
00404  2 12 00445          MIW     MSG5&6,2
00405  0 41 00404          BRX     *-1
00406  0 76 00605          LDA     TA
00407  0 75 00607          LDB     SUM
```

```
00410  0 00 00000          HLT
00411  0 01 00200          BRU     START-5
00412  0 02 02041  TYPE    TYPW    1,1
00413  0 12 00426          MIW     MSG0
00414  0 02 14000          TOPW
00415  0 40 21000          BRTW
00416  0 01 00415          BRU     *-1
00417  0 02 02641          TYPW    1,4
00420  0 37 00432          STX     MSG4
00421  0 71 00463          LDX     DM5
00422  2 12 00437          MIW     MSG4&5,2
00423  0 41 00422          BRX     *-1
00424  0 00 00000          HLT
00425  0 01 00200          BRU     START-5
00426  52000000    MSG0    OCT     52000000
00427  22314512    MSG1    BCI     1,BIN
00430  30464312    MSG2    BCI     1,HOL
00431  31244512    MSG3    BCI     1,IDN
00432  12121212    MSG4    BCI     4,    CHECK ERROR
00436  52525252            OCT     52525252
00437  25515146    MSG5    BCI     5,ERROR IN COLUMN
00444  52525252            OCT     52525252
00445  52522231    MSG10   OCT     52522231
00446  45215170            BCI     1,NARY
00447  52525230    MSG11   OCT     52525230
00450  46434325            BCI     2,OLLERITH
00452  12632562    MSG15   BCI     3, TEST COMPLE
00455  63255252            OCT     63255252
00456  00000000    C0      DEC     0
00457  00000011    D9      DEC     9
00460  00000012    D10     DEC     10
00461  00000110    D72     DEC     72
00462  77777774    DM4     DEC     -4
00463  77777773    DM5     DEC     -5
00464  77777772    DM6     DEC     -6
00465  77777700    DM64    DEC     -64
00466  00000077    O77     OCT     77
00467  00007777    O7777   OCT     7777
00470  52522525    BC      OCT     52522525
00471  00000063    HC      BCI     1,00T
00472  77777777    ONES    OCT     77777777
00473  00121212    CTABLE  BCI     10,0   1   2   3   4   5   6   7   8   9
00505  00001000    HTABLE  OCT     1000,400,200,100,40,20,10,4
00515  00000002            OCT     2,1,202,102,42,22,12,6
00525  00004000            OCT     4000,4400,4200,4100,4040,4020,4010,4004
00535  00004002            OCT     4002,4001,4202,4102,4042,4022,4012,4006
00545  00002000            OCT     2000,2400,2200,2100,2040,2020,2010,2004
00555  00002002            OCT     2002,2001,2202,2102,2042,2022,2012,2006
00565  00000000            OCT     0,1400,1200,1100,1040,1020,1010,1004
00575  00001002            OCT     1002,1001,1202,1102,1042,1022,1012,1006
```

```
00605  0 00 00000  TA      PZE
00606  0 00 00000  TX      PZE
00607  0 00 00000  SUM     PZE
00610  0 00 00000  CARD    PZE
00611  0 00 00000  TEMP    PZE
00612  0 00 00000          PZE
00613  0 00 00000          PZE
            00337          END     EXIT&8

DONE PASS   2
```

IDENTIFICATION: Card Punch Test Program Package

AUTHOR: F. Valadez, SDS

ACCEPTED: 9 May 1963

COMPUTER CONFIGURATION: SDS 920 or SDS 910 with SDS model 9156 card punch system. For the verify test, an SDS model 9151 card reader and a typewriter are required.

PURPOSE: To provide an acceptance test for the SDS model 9156 card punch system.

PROGRAMMED OPERATORS: None.

STORAGE: 172 words.

TIMING: N/A

USE: The test package contains two acceptance tests whose outputs can be verified on-line, plus a special service test that can be used for checkout. The acceptance tests are selected by breakpoint switch settings, while the service test is entered by executing a branch instruction in the C register.

The test package tape is self-loading by normal Fill procedure. After the tape has been loaded, the computer will halt. At this time, set the breakpoint switches as outlined under the description of the desired test, and clear the halt to start the test.

A. TEST 1 - SINGLE CHARACTER PER CARD

This test punches the entire Hollerith character set, one character per card. The same character is repeated in columns 1-80 of each card. The following punch signals are tested: SKS 12046, SKS 14046.

To select this test, set Breakpoint Switch 1; reset Breakpoint Switches 2, 3, and 4.

When the test is completed, the computer will halt. The test can be repeated by clearing the halt.

USE: (cont.)

B. TEST 2 - ENTIRE CHARACTER SET ON CARD

This test punches the entire Hollerith character set on every card, in rotating fashion. Thus, every Hollerith character will be punched in every card column. The following punch signal is tested: SKS 14046.

To select this test, set Breakpoint Switch 2; reset Breakpoint Switches 1, 3, and 4.

When the test is completed, the computer will halt. The test can be repeated by clearing the halt.

C. SERVICE TEST

This test punches the pattern in the A register across the entire card. Every fourth column will contain the same information.

Before starting the test, enter the pattern to be punched in the A register. To start the test, reset Breakpoint Switch 1 and execute a BRU 342 (00100342) from the C register.

Punching will start and continue until Breakpoint Switch 1 is set. When the switch is set, the computer will halt. To restart the test, raise BP 1 and clear the halt.

To leave the service routine and return to the acceptance test, execute a BRU 200 (00100200) from the C register.

D. VERIFICATION

This test can be used to verify the cards punched by Test 1 or Test 2 only. There is no verification for the service test.

To use this test, first run either Test 1 or Test 2. When the punch test is completed, set Breakpoint Switch 3 in addition to the Breakpoint setting for the particular punch test. Load the cards into the reader and clear the halt. The information on the cards will now be read and checked for correctness.

If the information is all correct, the message "Verify Complete" will be typed. If an error is detected, "Verify Error" will be typed and the computer will halt. The last card read will be in error. It is not possible to continue the verify test. However, it can be restarted from the beginning by reloading the card deck and clearing the halt.

METHOD:

An initial card image is formed and stored in a buffer area. For the acceptance tests, the image is modified between cards; the service test does not alter the initial image.

The verify test generates and modifies the card images, and compares the results against the punched cards.

```
* CARD PUNCH TEST PROGRAM PACKAGE
*
* BP1 SET- SINGLE CHARACTER MODE.
* BP2 SET- ENTIRE CHARACTER SET
* BP3 SET- VERIFY MODE
*
00200   0 76 00403  START   LDA     DM64
00201   0 35 00426          STA     DONE
00202   0 40 20400          BPT     1
00203   0 01 00210          BRU     TEST1
00204   0 40 20200          BPT     2
00205   0 01 00215          BRU     TEST2
00206   0 00 00000          HLT
00207   0 01 00200          BRU     START
*
00210   0 46 30003  TEST1   CLR                     INITIALIZE SINGLE
00211   0 71 00402          LDX     DM20            CHARACTER TEST
00212   2 35 00454          STA     IMAGE&20,2
00213   0 41 00212          BRX     *-1
00214   0 01 00227          BRU     COM1
*
00215   0 71 00401  TEST2   LDX     DM16            INITIALIZE CHARACTER
00216   0 76 00407          LDA     CSTAR           SET TEST
00217   2 35 00450          STA     IMAGE&16,2
00220   0 55 00406          ADD     CADD4
00221   0 41 00217          BRX     *-2
00222   0 71 00375          LDX     DM4
00223   0 76 00407          LDA     CSTAR
00224   2 35 00454          STA     IMAGE&20,2
00225   0 55 00406          ADD     CADD4
00226   0 41 00224          BRX     *-2
*
00227   0 40 20100  COM1    BPT     3
00230   0 01 00310          BRU     VERIFY
00231   0 76 00400          LDA     DM12
00232   0 35 00425          STA     CARD
00233   0 40 20200          BPT     2               OMIT BIT 13-TEST 2
00234   0 01 00237          BRU     *&3
00235   0 40 12046          SKS     12046           BIT 13-PUNCH BUF RDY
00236   0 01 00235          BRU     *-1
00237   0 40 14046          SKS     14046           BIT 12-PUNCH RDY
00240   0 01 00237          BRU     *-1
00241   0 71 00402  COM2    LDX     DM20
00242   0 02 00646          EOM     646             SELECT PUNCH
00243   2 12 00454          MIW     IMAGE&20,2
00244   0 40 20010          BETW
00245   0 01 00206          BRU     START&6
00246   0 41 00243          BRX     *-3
00247   0 02 14000          TOPW                    COMPLETE ROW
00250   0 40 21000          BRTW
```

```
00251  0 01 00250          BRU     *-1
00252  0 40 20200          BPT     2                   OMIT BIT 13-TEST 2
00253  0 01 00256          BRU     *&3
00254  0 40 12046          SKS     12046               BIT 13-PUNCH BUF RDY
00255  0 01 00254          BRU     *-1
00256  0 61 00425          MIN     CARD
00257  0 53 00425          SKN     CARD
00260  0 01 00262          BRU     *&2
00261  0 01 00241          BRU     COM2                PUNCH NEXT ROW
00262  0 43 00271          BRM     ROTATE
00263  0 61 00426          MIN     DONE
00264  0 53 00426          SKN     DONE                TEST FOR DONE
00265  0 01 00267          BRU     *&2
00266  0 01 00231          BRU     COM1&2
00267  0 00 00000  COM5    HLT
00270  0 01 00200          BRU     START
*
00271  0 00 00000  ROTATE  PZE                         CHANGE CARD IMAGE
00272  0 71 00402          LDX     DM20
00273  0 76 00375          LDA     DM4
00274  0 35 00424          STA     X2
00275  2 76 00454          LDA     IMAGE&20,2
00276  0 55 00404          ADD     1B5
00277  0 67 20006          LCY     6
00300  0 61 00424          MIN     X2
00301  0 53 00424          SKN     X2
00302  0 01 00304          BRU     *&2
00303  0 01 00276          BRU     *-5
00304  2 36 00454          STB     IMAGE&20,2
00305  0 41 00273          BRX     ROTATE&2
00306  0 02 20001          ROV
00307  0 51 00271          BRR     ROTATE
00310  0 71 00402  VERIFY  LDX     DM20
00311  0 40 12006          SKS     12006               CARD READER READY
00312  0 01 00311          BRU     *-1
00313  0 02 02606          RCDW    1,4
00314  0 75 00410          LDB     ONES
00315  0 32 00427          WIM     TEMP
00316  0 76 00427          LDA     TEMP
00317  2 70 00454          SKM     IMAGE&20,2          COMPARE WORD
00320  0 01 00334          BRU     ERROR
00321  0 41 00315          BRX     *-4
00322  0 43 00271          BRM     ROTATE
00323  0 61 00426          MIN     DONE
00324  0 53 00426          SKN     DONE                TEST FOR DONE
00325  0 01 00327          BRU     *&2
00326  0 01 00310          BRU     VERIFY              READ NEXT CARD
00327  0 02 02641          TYPW    1,4                 DONE MESSAGE
00330  0 71 00377          LDX     DM6
00331  2 12 00417          MIW     MSG1&6,2
```

```
00332   0 41 00331          BRX     *-1
00333   0 01 00267          BRU     COM5
00334   2 75 00454  ERROR   LDB     IMAGE&20,2          PRINT ERROR MSG
00335   0 02 02641          TYPW    1,4
00336   0 71 00376          LDX     DM5
00337   2 12 00424          MIW     MSG2&5,2
00340   0 41 00337          BRX     *-1
00341   0 01 00267          BRU     COM5
*
* CARD PUNCH SERVICE ROUTINE.
* ENTER BY BRU 342
* EXIT BY BRU 200
* SET IMAGE IN A REGISTER BEFORE STARTING
* SET BP1 TO STOP TEST
*
00342   0 71 00402  SERV    LDX     DM20
00343   2 35 00454          STA     IMAGE&20,2
00344   0 41 00343          BRX     *-1
00345   0 71 00400  SERV1   LDX     DM12
00346   0 37 00425          STX     CARD
00347   0 40 12046          SKS     12046               BIT 13-PUNCH BUF RDY
00350   0 01 00347          BRU     *-1
00351   0 40 14046          SKS     14046               BIT 12-PUNCH RDY
00352   0 01 00351          BRU     *-1
00353   0 71 00402  SERV2   LDX     DM20
00354   0 02 00646          EOM     646                 SELECT PUNCH
00355   2 12 00454          MIW     IMAGE&20,2
00356   0 41 00355          BRX     *-1
00357   0 02 14000          TOPW
00360   0 40 21000          BRTW
00361   0 01 00360          BRU     *-1
00362   0 40 12046          SKS     12046               BIT 13-PUNCH BUF RDY
00363   0 01 00362          BRU     *-1
00364   0 61 00425          MIN     CARD
00365   0 53 00425          SKN     CARD
00366   0 01 00370          BRU     *&2
00367   0 01 00353          BRU     SERV2
00370   0 40 20400          BPT     1
00371   0 01 00373          BRU     *&2
00372   0 01 00345          BRU     SERV1
00373   0 00 00000          HLT
00374   0 01 00342          BRU     SERV
*
00375   77777774    DM4     DEC     -4
00376   77777773    DM5     DEC     -5
00377   77777772    DM6     DEC     -6
00400   77777764    DM12    DEC     -12
00401   77777760    DM16    DEC     -16
00402   77777754    DM20    DEC     -20
00403   77777700    DM64    DEC     -64
```

```
00404   01000000     1B5     DEC     1B5
00405   01010101     CADD    OCT     01010101
00406   04040404     CADD4   OCT     04040404
00407   00010203     CSTAR   OCT     00010203
00410   77777777     ONES    OCT     77777777
00411   52525252     MSG1    OCT     52525252
00412   65255131             BCI     4,VERIFY  COMPLETE
00416   52525252             OCT     52525252
00417   52525252     MSG2    OCT     52525252
00420   65255131             BCI     3,VERIFY ERROR
00423   52525252             OCT     52525252
00424   0 00 00000   X2      PZE
00425   0 00 00000   CARD    PZE
00426   0 00 00000   DONE    PZE
00427   0 00 00000   TEMP    PZE
00430   0 00 00000   IMAGE   PZE
            00267            END     COM5

DONE PASS    2
```

IDENTIFICATION: 15 KC Magnetic Tape Test Using Interrupt with Interlace Option

AUTHOR: Richard S. Resnick, SDS

ACCEPTED: 3 December 1962

COMPUTER CONFIGURATION: Any SDS 910 or SDS 920 with one 9140 or 9145 Magnetic Tape Unit.

PURPOSE: This program aids in testing the input/output capabilities of the 9140 or 9145 Magnetic Tape Unit using Interrupt and/or Interlace.

PROGRAMMED OPERATORS: None

STORAGE: Location 00033, locations 00200 thru 00377, and locations 01000 thru 02000 for data storage.

TIMING: Not applicable.

USE: The Interim Utility Package (II, III or IV), Catalog Numbers 090001 or 000011, must be in memory and is used to load this program. To load this program, the program is placed in the reader and the "F" key on the typewriter is depressed. Loading is then automatic.

This program tests the ability of the computer to output blocks of information to one tape unit by normal output methods using interrupt or by interlacing the information to the magnetic tape unit. The program also tests the ability of the computer to read information from the magnetic tape unit under the above-mentioned circumstances. The program essentially reads or writes the same word N times per block. The block length and word are initial parameters and do not change unless reloaded.

The Breakpoints have the following meaning:

Breakpoint 1 set = Repeat Test
Breakpoint 2 reset = Return Control to the Typewriter
Breakpoint 2 set = No Halt on Errors
Breakpoint 2 reset = Halt on errors
Breakpoint 3 set = Read (Input from Magnetic Tape)
Breakpoint 3 reset = Write (Output to Magnetic Tape)
Breakpoint 4 set = Interlace
Breakpoint 4 reset = No Interlace

USE: (Cont.) The program operates under control of the Interim Utility Package. Several operations are performed by special subroutines. To perform an operation, the operator must address the desired operations subroutine from the keyboard by typing the operation's starting address, a star (*) and then a comma. The following is a list of the operation and their starting address:

LOAD A AND B = 'AAAAAAAA. BBBBBBBB.

This loads the A register with the desired block length and the B register with the desired data word.

SET-UP = 350* , (A = Number of words per block)
(B = word)

The program sets up the block length and word. It also initializes the other subroutines. The Pot constant is set up by this program.

CONTROL = 200* ,

This program performs the actual communication, one block per entry, in compliance with the Breakpoint settings.

REWIND = 320* ,

This program rewinds the tape to the beginning.

ERASE = 340* ,

This program erases 13 3/4 feet of tape.

BACK-UP = 330* ,

This program backs up one block per entry. Continuous back-up can be obtained by setting Breakpoint 1.

There are only two error halts:

Location 240 = Buffer Error

Location 272 = Data Error (A = Bits that failed)
(B = Location of error)

USE: (Cont.)

Example of Usage

```
'40. 12345671. 350 * , (Set BP 1, 4) 320 * ,
340 * , 200 * , (reset BP 1 after a few seconds)
(set BP 1, 3, 4) 330 * , (reset BP 1) 200 * , -
```

Set count to 32_{10} and word to 12345671.

Rewind tape to beginning.

Erase 13 feet.

Store 12345671, 32 words per block into magnetic tape Interlace.

Back tape up.

Read magnetic tape unit and test results.

METHOD: Not applicable.

SCIENTIFIC DATA SYSTEMS

SCIENTIFIC DATA SYSTEMS

SDS 900 SERIES PROGRAM LISTING

PROBLEM: 15 KC MAGNETIC TAPE TEST USING INTERRUPT WITH INTERLACE OPTION

Catalog No. 044001

PROGRAMMER: RICHARD S. RESNICK

DATE 12/3/62

LOCATION	INSTRUCTION		REMARKS
ØØØ33*	BRM	ØØ315.	
2ØØ*			
	SKS	2Ø1ØØ.	READ OR WRITE?
	BRU	ØØ245.	READ - BRANCH TO READ
	LDB	ØØ326.	WRITE
	STB	ØØ232.	SET UP - WRITE PROGRAM
	LDB	ØØ337.	
	STB	ØØ241.	
	LDA	ØØ371.	
21Ø*	STA	ØØ374.	SET UP WORD FOR IMAGE
	LDA	ØØ367.	SET UP WRITE - EOM
	LDB	ØØ347.	SET UP IW1 FOR WRITE
	STB	ØØØ31.	
	SKS	2ØØ4Ø.	INTERLACE?
	BRU	ØØ256.	YES - BRANCH TO INT
	EOR	ØØ233.	REMOVE INTERLACE BIT FROM EOM
	STA	ØØ231.	STORE EOM WORD
22Ø*	LDX	ØØ375.	
	LDA	ØØ374.	PREPARE IMAGE
	STA	4Ø372.	
	BRX	ØØ222.	
	LDX	ØØ375.	
	SKS	1Ø41Ø.	
	BRU	ØØ23Ø.	WAIT FOR MAG TAPE READY
	BRU	ØØ225.	
23Ø*	EOM	2ØØØ2.	ENABLE INTERRUPT
	HLT	4ØØØØ.	
	EOM	2ØØØ4.	DISABLE INTERRUPT
	SKS	2ØØ1Ø.	
	SKS	2Ø2ØØ.	TEST BUFFER ERROR
	BRU	ØØ241.	

SCIENTIFIC DATA SYSTEMS

SCIENTIFIC DATA SYSTEMS

SDS 900 SERIES PROGRAM LISTING

PROBLEM: 15 KC MAGNETIC TAPE TEST USING INTERRUPT WITH INTERLACE OPTION

Catalog No. 044001

PROGRAMMER: RICHARD S. RESNICK

DATE 12/3/62

LOCATION		INSTRUCTION		REMARKS
24Ø*		HLT	6ØØØØ.	BUFFER ERROR HALT
		SKS	2Ø4ØØ.	REPEAT TEST ?
		BRU	ØØ22Ø.	YES -
		BRR	ØØ2ØØ.	NO - RETURN CONTROL TO ILP4
		LDB	ØØ325.	
		STB	ØØ232	SET UP READ PROGRAM
		LDB	ØØ327.	
25Ø*		STB	ØØ241.	SET UP CHECK PROGRAM
		CLR	3ØØØ3.	
		STA	ØØ374.	SET UP ZERS FOR IMAGE
		LDA	ØØ366.	SET UP READ - EOM
		LDB	ØØ346.	SET UP IW1 FOR READ
		BRU	ØØ213.	
		LDB	ØØ317.	SET UP INTERLACE COMMAND
		STB	ØØ232.	
26Ø*		BRU	ØØ217.	
		LDA	ØØ276.	INITIATE COUNTER
		STA	ØØ373.	
		LDX	ØØ375.	
		LDB	ØØ373.	ADDRESS IN B
		LDA	ØØØ71.	WORD IN A
		EOR	4Ø372.	
		SKA	ØØ37Ø.	TEST WORD
27Ø*		SKS	2Ø2ØØ.	
		BRU	ØØ273.	A = ERROR BITS
	2	HLT	Ø1ØØØ.	DATA ERROR B = LOCATION
		MIN	ØØ373.	
		BRX	ØØ264.	
		BRU	ØØ242.	
		HLT	Ø1ØØØ.	WAIT FOR IW1 INTERRUPT
		BRX	ØØ276.	

SCIENTIFIC DATA SYSTEMS

SCIENTIFIC DATA SYSTEMS

SDS 900 SERIES PROGRAM LISTING

PROBLEM: 15 KC MAGNETIC TAPE TEST USING INTERRUPT WITH INTERLACE OPTION

Catalog No. 044001

PROGRAMMER: RICHARD S. RESNICK

DATE 12/3/62

LOCATION	INSTRUCTION		REMARKS
300*	HLT	00000.	WAIT FOR IW1 INTERRUPT
	BRU	00234.	
	HLT	00000.	WAIT FOR IW1 INTERRUPT
	BRX	00302.	
	EOM	14000.	FORCE LAST CHAR THRU BUFFER
	HLT	00000.	WAIT FOR IW2 INTERRUPT
	BRU	00234.	
310*	MIW	40372.	OUTPUT
	BRU	40307.	
	WIM	40372.	INPUT
	BRU	40312.	
	BRU	40315.	IW2 UNCOCK AND RETURN
	POT	00376.	
320*.	EOM	14010.	REWIND TAPE UNIT COMMAND
	SKS	10410.	
	BRR	00320.	TEST FOR LEADER
	BRU	00322.	
	BRU	00276.	
	BRU	00302.	
	BRU	00261.	
330*.	EOM	07630.	REVERSE COMMAND
	SKS	21000.	TEST FOR END OF BLOCK
	BRU	00332.	
	SKS	20400.	REPEAT
	BRU	00331.	YES - CONTINUE
	BRR	00330.	
	NOP	00000.	

SCIENTIFIC DATA SYSTEMS

SCIENTIFIC DATA SYSTEMS

SDS 900 SERIES PROGRAM LISTING

PROBLEM: 15KC MAGNETIC TAPE TEST USING INTERRUPT WITH INTERLACE OPTION

PROGRAMMER: RICHARD S. RESNICK

Catalog No. 044001

DATE 12/3/62

LOCATION	INSTRUCTION		REMARKS
34Ø*.			
	LDX	ØØ24Ø.	
	EOM	Ø367Ø.	ERASE COMMAND
	MIW	ØØ377.	ERASE 13 3/4 FEET
	BRX	ØØ343.	
	BRR	ØØ34Ø.	
	BRM	ØØ312.	
	BRM	ØØ3Ø7.	
35Ø*.			
	STB	ØØ371.	
	ADD	ØØ272.	
	STA	ØØ372.	FROM INDEX LO + N WORD
	SUB	ØØ272.	
	ABC	2ØØØ5.	
	RCY	2ØØ12.	
	ADD	ØØ276.	
36Ø*	STA	ØØ376.	FORM POT WORD
	RCY	2ØØ16.	
	EOR	ØØ37Ø.	
	SUB	ØØ37Ø.	
	STA	ØØ375.	FORM - N
	BRR	ØØ35Ø.	
	EOM	4361Ø.	
	EOM	4365Ø.	
37Ø*	777	77777.	
/‡			

IDENTIFICATION: Multi-Magnetic Tape System Exerciser

AUTHOR: A. W. England, SDS

ACCEPTED: 24 June 1964

COMPUTER CONFIGURATION: All 920, 925, and 930 systems, or any 910 systems with a typewriter, which have one to sixteen tape units attached to the W and/or Y buffers. No interlace is required and the tapes may be of any density and speed within the limitations of the buffer to which they are attached.

PURPOSE: This program is designed to exercise from one to sixteen tape units by first writing random numbers in random length records on all tapes under test and then reading these records back and comparing them with the numbers written. An attempt is made to tabulate and output all useful information concerning the errors made, if any, the mode of operation of each unit, and the number of passes over the tape.

STORAGE: The program occupies the first 1155 words of memory. The remaining memory may be used for test record storage.

TIMING: The program requires approximately 20 minutes to write or read a full reel (2400 feet) of tape.

USE:

1.0 LOADING

Place tape in reader and FILL. When loading is complete the light on the typewriter will light if no loading error occurred.

2.0 KEYBOARD CONTROL

When the keyboard light is on, the operator has control over the program. By actuating various keys he may set the test parameters, inspect results or start the exerciser test running.

2.1 REGAINING KEYBOARD CONTROL

Control may be returned to the keyboard mode at any time by moving the RUN-IDLE-STEP switch to IDLE, pressing the START button, and moving the switch first to STEP then to RUN.

USE: (Cont)

3.0 CONTROL FUNCTIONS

The following list contains the call letters for the various functions which the program will perform. These may be typed anytime the typewriter light is lit.

3.1 SELECT UNITS, "U"

The units to be exercised are selected by first typing the letter "U" followed by the several unit numbers separated by commas and finally a carriage return. After the last unit number followed by a comma is entered a carriage return must be given to terminate the unit select operation. Units on the W buffer are numbered 0-7 and on the Y buffer $10\text{-}17_8$.

3.2 SET STARTING RANDOM NUMBER, "N"

The initial random number is set by first typing the octal number desired (up to 8 digits) and then the letter N. The number being typed can be set to zero by typing a carriage return.

3.3 SET MAXIMUM FILE LENGTH, "M"

The maximum number of records in the test file is set by typing the desired number of records in octal followed by the letter M. If the entire 2400 foot reel is to be written a maximum count of 10000_8 or greater should be sufficient.

3.4 SET MAXIMUM RECORD LENGTH, "L"

The maximum number of words in a record is set by typing the limit in octal followed by the letter L. If the specified maximum is less than or equal to 8 or greater than the maximum memory available then the maximum length is set equal to the memory available.

3.5 MODE SELECT

The recording mode, either BCD or Binary is selected by typing the appropriate letter.

3.5.1 Select Binary Mode, "B"

Typing the letter B will cause the appropriate EOM instructions to be converted to the binary mode of operation.

USE: (Cont)

3.5.2 Select BCD Mode, "D"

Typing the letter D will cause the EOM instructions to be set for BCD operation.

3.6 SELECT OUTPUT MEDIA

The output of the various messages and counters during the operation of the program can be on either the on-line typewriter or on paper tape for off-line listing. This is controlled by typing the appropriate letter before starting.

3.6.1 Select Typewriter Output, "T"

The typewriter is selected by typing the letter T.

3.6.2 Select Punch Output, "P"

The punch is selected by typing the letter P.

3.7 INITIATE TAPE OPERATION

After the appropriate parameters have been set the tape exercise operation may be initiated. There are three ways in which this may be done. If nothing has been recorded then the exercise must be begun with a START WRITE. However, once a file of information is written on tape and the program is stopped the other two starts can be used.

3.7.1 Start Write, "S"

To begin the exercise operation, type the letter S. The program will rewind all units and start to write a random number test file on the selected units.

3.7.2 Continue Operation, "C"

Once the exercise operation has been stopped with Breakpoint 1 (see section 4.1) it can be resumed from the point at which it was stopped by typing the letter C.

3.7.3 Restart Read, "R"

If during a read pass the program is stopped and the operator would like to reread the file from the beginning he can type the letter R to restart the read pass.

3.8 OUTPUT OPERATIONAL STATUS, "O"

The operator can inspect the status of the operation at anytime by stopping the program with Breakpoint 1 (see section 4.1) and typing the letter O. The program will then type out the status of the exercise operation as follows:

USE: (Cont)

3.8.1 Type of Pass

It types READ or WRITE depending on the type of pass in progress.

3.8.2 Mode of Operation

It then types the mode of operation, either BINARY or BCD.

3.8.3 Unit

The UNIT NO. of the tape unit currently being addressed is typed.

3.8.4 Program Counters

After this information the program will type a table of 17 counters each identified by a three or four character symbol. These symbols and their definitions follow:

MRC Maximum Record Count. This is the octal number entered with the M key at the start of the exercise operation.

MRL Maximum record length curren.ly being used.

WRC Write Record Count. If in a write pass this indicates the number of records written. In a read pass it indicates the total number written in the previous write pass.

RRC Read Record Count. This indicates the number of records read during a read pass.

WPC Write Pass Count. The number of write passes completed.

RPC Read Pass Count. The number of read passes completed.

WEC Write Error Count. The number of write errors that have occurred.

RWEC Rewrite Error Count. This number of rewrite errors.

PREC Permanent Read Error Count. The records that were read bad 10 times.

CPEC Character Parity Error Count. The number of character parity errors that have occurred since the start of the exercise.

USE: (Cont)

LPEC Longitudinal Parity Error Count. The number of longitudinal parity errors that have occurred. For each read try only one character or longitudinal parity can be counted and character parity has priority.

WCEC Word Count Error Counts. The number of word count errors that have occurred. A word count error occurs if the record read is longer or shorter than the record expected.

CH1, CH2, CH3, CH4, CH5, CH6 — Errors in Channels 1-6. Channel 1 is the most significant bit, channel 6 the least. These counters are also output whenever a read error occurs if Breakpoint 2 is RESET. After a read error output they are cleared.

4.0 BREAKPOINT SWITCHES

The four Breakpoint switches are used to change the status of the program while it is running. These functions are as follows:

4.1 BREAKPOINT 1

RESET: Normal

SET: Stop operation. After almost every tape operation there is a STOP point. If Breakpoint 1 is set the program will mark its place and return to the keyboard control mode. Operation can be continued by typing the letter C.

4.2 BREAKPOINT 2

RESET: Output counters and messages whenever the normal output situation occurs.

SET: Skip the output of messages and counters. This will inhibit all output except the OUT OF SYNC message and the FILE PROTECT ON message.

4.3 BREAKPOINT 3

RESET: At the end of a read pass go on to another write with new random numbers.

SET: At the end of a read pass go back and reread the same file again.

4.4 BREAKPOINT 4

RESET: Run without halts.

SET: Halt on a write error or at the end of a read pass. Clearing these halts will allow the program to continue.

USE: (cont.) 5.0 MESSAGES

The program will type or punch status messages at various times in the operation of the exercise. These are described below:

5.1 END OF PASS

At the end of a write or read pass the output will be either WRITE or READ, PASS DONE. This is followed by a carriage return and the following two lines:

```
WRITES   READS  WRITE ERR REWRITES BAD READS
aaaaaaaa bbbbbbbb cccccccc dddddddd eeeeeeee
```

where the a's represent the number of write passes in octal, the b's the number of read passes, the c's the number of write errors which have occurred, the d's the number rewrite errors, and the c's the number of records which were read erroneously 10 times.

5.2 REWRITE ERROR

If a write error is detected the program erases backward over the record and attempts to rewrite it. If this second attempt is also in error the program outputs the following counter titles:

WRITE PASS RECORD NO. WRITE ERRS REWRITE ERRS

This is followed on the same line by the mode of operation (Binary or BCD) and the unit number. On the next line below the appropriate title it outputs the write pass count, the write record number count, the write error count and the rewrite error count. All counts are in octal.

5.3 READ ERROR

If a read error occurs, the program rereads the record nine more times and then outputs the read pass, record number, mode, and unit number. This is followed by a carriage return, the message, READ ERROR another carriage return and then nine, eight-octal-digit counters which represent the following quantities (from left to right): character parity error count, longitudinal parity error count, word count error count, errors in channel 1, channel 2, etc., to channel 6. On the next line the program outputs a good or bad message for each of the 10 reads. This consists of the letter G if the read was correct or B if the read was incorrect.

USE: (cont.) For example:

B G G G B G G G G G

Indicates that the first and fifth reads were bad and all others were good.

5.4 READ PASS OUT OF SYNC

The first word of every record is the number of records preceding it on the tape. When each record is read, the program compares this first word with the read record count. If they disagree the program backspaces and rereads the record a second time, if they still disagree then the difference between them is computed and the program spaces over as many records as necessary to position itself in front of the correct record. If the first word of this record does not agree with the read record count after two attempts the program ends the read pass and outputs the following. As in a read error it outputs the read pass count, read record number, mode, density and unit number. This is followed by this message:

READ PASS ABORT, OUT OF SYNC.
aaaaaaaa bbbbbbbb

where the a's represent the first word of the first record read that did not agree with the read record count, and the b's represent the first word of the record read after spacing to what should have been the correct record. The program then goes to the end of read pass section where the end of pass output will be produced and from there on to another write or reread pass.

If a tape mark or the load point was encountered when spacing, the program terminates the read pass and outputs TAPE MARK before the other outputs. If it was the load point which was encountered it also outputs LOAD POINT. In either case the two words a and b will be the same since only one record was read.

5.5 FILE PROTECT ON

Before the program attempts to write on a tape it tests the file protect for that unit. If the file protect should be on, the program outputs: FILE PROTECT ON (Mode) UNIT NO. n. and returns to the keyboard mode.

METHOD: 1.0 WRITING

At the start of the write pass all units are rewound. The program then sets the tape control table for the lowest numbered unit and waits for it to be ready. As soon as this unit is ready a check is made to see if the tape is at

METHOD: (cont.) the loadpoint. If it is not,another rewind is given and the program waits until it is ready and at the load point. A three inch section of tape is erased before the first random number record is written. After writing this record on the first unit the control table is set to the next higher numbered unit and the record is written again. This continues until a record has been written on all units under test. The program then generates a new record of random numbers and starts writing this on all units.

1.1 WRITE ERROR

If a write error occurs the program erases backward to the front of this record and attempts to rewrite it. If this second attempt is also in error then the program outputs the rewrite error message. It then erases backward over the record again, erases it forward and attempts to write the record again on a new section of tape. An error here is considered a new write error and the process continues until a correct write is made.

1.2 END OF PASS

The write pass is concluded if one of two conditions occurs: Either the write record count reaches the maximum record count or an end of reel is encountered on any tape under test. When one of these occurs the program writes an end of file on all units and rewinds them. It then outputs the end of pass message and proceeds to the read pass.

2.0 READING

A read pass is similar to a write except that the program reads each record into memory and compares it with the random numbers which it regenerates for each read. The first record must be read starting from the load point. This insures that the tape is always positioned properly for the start of the pass.

2.1 READ ERRORS

When a read error occurs the program will always reread the record nine more times for a total of ten attempts regardless of whether or not a subsequent read was correct. It then outputs the results of these reads. Several conditions can cause a read error.

2.1.1 Character Parity Errors

The program counts a character parity error as any buffer error which occurs before the gap is reached.

METHOD: (Cont)

2.1.2 Longitudinal Parity Error

If no character parity errors have occurred before the gap is reached and the buffer error is on after the tape stops, the program counts a longitudinal parity error.

2.1.3 Word Count Error

A word count error is defined as a record which was not of the length expected. The program tests for this in three ways. If more words than expected were read the read routine falls out of the loop too soon. The program also checks to see if the read loop should detect the end of record before expected. The third test is based on the fact that the program always writes records that consist of a multiple of four characters. Therefore, if the buffer contains anything other than zero at the end of the read an error has occurred.

2.2 READ SYNCHRONIZATION

When each record is read the first word is compared against the program record count. If they disagree it means that the program and tape are no longer synchronized. To guard against a read error causing the disagreement, the program backspaces and reads the record again. If they still disagree then the program computes the number of records to be spaced over in order to reach the desired record and moves to that point. It reads the new record and again checks the first word. If this word disagrees with the record count and a second read attempt does not correct the disagreement then the program aborts the read pass and outputs the appropriate message. If a tape mark or the load point is encountered while spacing to the correct position the pass is aborted without further read attempts.

2.3 END OF FILE

If the program should detect the buffer ready after the first word is read then a check for end of file is made. If the ready condition was caused by the reading of a tape mark then the read pass is complete and appropriate messages are output. If there is no tape mark character then the program assumes that the tape mark was read erroneously and terminates the read pass anyway and outputs an END OF FILE READ ERROR message.

METHOD: (Cont)

3.0 BCD MODE

In the BCD mode random numbers are generated and written the same as in binary. However, on the read pass all non compares between the generated number and the number from tape are checked to see if they are caused by the 12 to 00 conversion. This occurs because both the character 00 and the character 12 will be written on tape as a 12 but this character will always be read into memory as a 00.

```
CONTROL    =        UPDATE  1-1223
CONTROL    =        DELETE  2
CONTROL    =        REPLACE 74, 134, 227
       SAMP=        BRU     CLR                 EXIT
       SAMP=        LDB     EIGHT               010
       SAMP=        SKG     EIGHT               IS SPECIFIED MAX > 8
CONTROL    =        REPLACE 617, 729-31/6
       SAMP=        PAGE
       SAMP=        LDA     T1                  GET (BUFFER) AT EOR.
CONTROL    =        REPLACE 990
       SAMP=        MIW     EFREM+6,2
CONTROL    =        INSERT  1048/2, 1049
       SAMP=        RSH     6
       SAMP=        MIW     T2
CONTROL    =        ENDUPDATE
CONTROL    =        FINISH
```

```
                                    1   *       910/920/925/930  MULTI-MAGNETIC TAPE SYSTEM EXERCISER
                                    2   *
                                    3   *               W OR Y BUFFER, NO INTERLACE REQUIRED
                                    4   *
                                    5   *
                                    6   *
                                    7   *
00200  C 76 00252                   8   MC00    LDA     G0MC01
00201  C 35 00001                   9           STA     1
00202  C 46 00003                  10   CLR     CLR
00203  C 35 00245                  11           STA     ACCUM
00204  C 02 20004                  12   MC01    DIR
00205  C 02 00100                  13           DISY
00206  C 02 02001                  14           RKBW    1,1
00207  C 32 00012                  15           WIM     T1
00210  C 75 00012                  16           LDB     T1
00211  C 66 20011                  17           RCY     9
00212  C 75 02152                  18           LDB     C1
00213  C 71 02171                  19           LDX     C18                 -15
00214  2 70 00237                  20           SKM     CTE,2
00215  C 41 00214                  21           BRX     *-1
00216  C 02 00000                  22           DISW
00217  2 01 40237                  23           BRU*    CTE,2
                                   24   *
00220  C 22 01307                  25           B       B00                 CONTROL CHARACTER TABLE
00221  C 23 00246                  26           C       C00
00222  C 24 01305                  27           D       D00
00223  C 43 01323                  28           L       L00
00224  C 44 01302                  29           M       M00
00225  C 45 01277                  30           N       N00
00226  C 46 01170                  31           O       O00
00227  C 47 01264                  32           P       P00
00230  C 51 01327                  33           R       R00
00231  C 62 00476                  34           S       S00
00232  C 63 01261                  35           T       T00
00233  C 64 00254                  36           U       U00
00234  C 52 00202                  37           CR      CLR
00235  C 12 00204                  38           SP      MC01
00236  C 72 00204                  39           TAB     MC01
```

```
00237  C 00 00240      40   CTE     PZE     DIGIT          CONTROL TABLE END
                       41   *
                       42   *
00240  C 67 20006      43   DIGIT   LCY     6              ACCUMULATE DIGIT
00241  C 75 00245      44           LDB     ACCUM
00242  C 67 20003      45           LCY     3
00243  C 36 00245      46           STB     ACCUM
00244  C 01 00204      47           BRU     MC01
                       48   *
00245  C 00 00000      49   ACCUM   PZE
```

```
                                PAGE
                        *
00246  C 02 00000       C00     DISW
00247  C 51 00250               BRR     STOP
                        *
00250  C 00 00000       STOP    PZE
00251  C 40 20400               BPT     1
00252  C 01 00204       GOMC01  BRU     MC01
00253  C 51 00250               BRR     STOP
                        *
                        *
00254  C 76 00305       U00     LDA     UNTB                    RESET UNIT NO. TABLE LIMIT
00255  C 35 00307               STA     UNTL
00256  C 02 02001               RKBW    1.1
00257  C 46 00001       U01     CLA
00260  C 35 00245               STA     ACCUM
00261  C 75 02210       U02     LDB     C77
00262  C 32 00012               WIM     T1                      READ CHAR
00263  C 76 00012               LDA     T1
00264  C 70 02207               SKM     C52                     CHARACTER = C/R
00265  C 01 00271               BRU     U03                     NO
00266  C 76 00305               LDA     UNTB                    YES
00267  C 35 00306               STA     UNTI                    SET UNIT NO. TABLE INDEX
00270  C 01 00202               BRU     CLR                     EXIT
                        *
00271  C 70 02204       U03     SKM     C29     =073            COMMA
00272  C 01 00300               BRU     U04                     NO
00273  C 76 00245               LDA     ACCUM                   YES
00274  C 14 02205               ETR     C30                     107
00275  C 35 40307               STA*    UNTL                    SAVE UNIT NO.
00276  C 61 00307               MIN     UNTL                    ADVANCE LIMIT
00277  C 01 00257               BRU     U01
                        *
00300  C 66 00006       U04     RSH     6                       PACK CHARACTER
00301  C 76 00245               LDA     ACCUM
00302  C 67 00006               LSH     6
00303  C 01 00260               BRU     U01+1
                        *
                        *
```

```
00304  C 00 00000      89   UN      PZE                          UNIT NUMBER
00305  C 00 00310      90   UNTB    PZE     UNT                  UNIT NO. TABLE BEGINNING
00306  C 00 00310      91   UNTI    PZE     UNT                  UNIT NO. TABLE INDEX
00307  C 00 00310      92   UNTL    PZE     UNT                  UNIT NO. TABLE LIMIT
                       93   *
00310        00040     94   UNT     BSS     32                   UNIT NO. TABLE
                       95   *
                       96   *
00350  C 00 00000      97   SU00    PZE                          STEP UNIT NO. SUBR.
00351  C 76 00307      98           LDA     UNTL
00352  C 73 00306      99           SKG     UNTI                 END OF TABLE
00353  C 01 00436     100           BRU     SU01                 YES
00354  C 61 00350     101           MIN     SU00                 NO
00355  C 76 40306     102   SU02    LDA*    UNTI
00356  C 35 00304     103           STA     UN
00357  C 71 00475     104           LDX     UBSTL                UPDATE ALL EOM'S AND SKS'S WHICH
00360  2 76 00475     105           LDA     UBSTL,2              REQUIRE BOTH A UNIT ADDRESS AS
00361  C 14 02201     106           ETR     C26   =077777670     WELL AS A BUFFER SELECTION.
00362  C 16 00304     107           MRG     UN
00363  2 35 00475     108           STA     UBSTL,2
00364  C 41 00360     109           BRX     *-4
00365  C 76 00304     110           LDA     UN
00366  C 14 02176     111           ETR     C23                  0100
00367  C 35 00012     112           STA     T1
00370  C 75 02176     113           LDB     C23                  0100
00371  C 70 00460     114           SKM     RTS                  SEE IF BUFFER SELECTION HAS CHANGED
00372  C 01 00374     115           BRU     *+2                  YES
00373  C 01 00434     116           BRU     SU99                 NO
00374  C 76 00460     117           LDA     TOP                  UPDATE ANY EOM'S AND SKS'S WHICH
00375  C 14 02202     118           ETR     C27   =077777677     REQUIRE ONLY BUFFER SELECTION IN
00376  C 16 00012     119           MRG     T1                   BIT POSITION 17.
00377  C 35 00460     120           STA     TOP
00400  C 46 00003     121           CLR
00401  C 76 00012     122           LDA     T1
00402  C 17 02176     123           EOR     C23                  0100  CHANGE BIT FOR MIB. BIM SELECT
00403  C 67 00012     124           LSH     10
00404  C 35 00013     125           STA     T2
00405  C 71 00467     126           LDX     BMTL
00406  2 76 40467     127           LDA*    BMTL,2               UPDATE ALL BIM'S AND MIB'S TO
```

```
00407  C 14 02203     128          ETR     C28    =077577777    OPERATE ON EITHER CHANNEL
00410  C 16 00013     129          MRG     T2
00411  2 35 40457     130          STA*    BMTL.2
00412  C 41 00406     131          BRX     *-4
00413  C 76 00012     132          LDA     T1
00414  C 75 02216     133          LDB     EIGHT                 010
00415  C 72 02176     134          SKA     C23                   Y BUFFER
00416  C 67 00001     135          LSH     1                     YES
00417  C 36 00012     136          STB     T1                    NO. SAVE CONST. FOR BET
00420  C 67 00006     137          LSH     6
00421  C 36 00013     138          STB     T2                    SAVE CONST. FOR BRT
00422  C 76 00441     139          LDA     BET                   UPDATE THE BET INSTRUCTION
00423  C 14 02200     140          ETR     C25                   77770000
00424  C 16 00012     141          MRG     T1
00425  C 35 00441     142          STA     BET
00426  C 71 00447     143          LDX     BRTL
00427  2 76 40447     144          LDA*    BRTL.2                UPDATE ALL BRT INSTRUCTIONS.
00430  C 14 02200     145          ETR     C25                   77770000
00431  C 16 00013     146          MRG     T2
00432  2 35 40447     147          STA*    BRTL.2
00433  C 41 00427     148          BRX     *-4
00434  C 61 00306     149  SU99    MIN     UNTI                  ADVANCE UNIT NO. TABLE INDEX
00435  C 51 00350     150          BRR     SU00                  EXIT
                      151  *
00436  C 76 00305     152  SU01    LDA     UNTB                  END OF TABLE
00437  C 35 00306     153          STA     UNTI                  RESTORE INDEX
00440  C 01 00355     154          BRU     SU02
                      155  *
                      156  *
00441  C 40 20010     157  BET     BETW                          BUFFER ERROR TEST
                      158  *
                      159  *  BUFFER READY SELECTION TABLE.      THIS TABLE CONTAINS THE ADDRESSES
                      160  *                                    OF ALL THE BRT INSTRUCTIONS USED IN
                      161  *                                    THE PROGRAM
00442  C 00 00641     162  BRT     PZE     BRT1
00443  C 00 01057     163          PZE     BRT2
00444  C 00 01361     164          PZE     BRT3
00445  C 00 01365     165          PZE     BRT4
00446  C 00 01367     166          PZE     BRT5
```

```
00447  C 00 77773     167   BRTL   PZE     BRT-*
                      168   *
                      169   *  W/YIM AND MIW/Y SELECTION TABLE.  THIS TABLE CONTAINS THE ADDRESSES
                      170   *                                    OF ALL THE BIM AND MIB INSTRUCTIONS
                      171   *                                    USED IN THE PROGRAM
00450  C 00 00645     172   BMT    PZE     BMT1
00451  C 00 00655     173          PZE     BMT2
00452  C 00 00703     174          PZE     BMT3
00453  C 00 01360     175          PZE     BMT4
00454  C 00 01364     176          PZE     BMT5
00455  C 00 01375     177          PZE     BMT6
00456  C 00 01663     178          PZE     BMT7
00457  C 00 77771     179   BMTL   PZE     BMT-*
                      180   *
                      181   *   BUFFER SELECTABLE ONLY TABLE
                      182   *
00460  C 02 14000     183   RTS    RTSW
       00460          184   TOP    EQU     RTS
                      185   *
                      186   *   UNIT AND BUFFER SELECTABLE TABLE
                      187   *
       00461          188   UBST   EQU     *
00461  C 02 03650     189   WT     WTBW    0,4
00462  C 02 03610     190   RT     RTBW    0,4
00463  C 02 02050     191   WEOF   WTDW    0,1
00464  C 02 03670     192   ET     ETW     0,4
00465  C 02 07670     193   ETR    ETRW    0,4
00466  C 02 03630     194   SF     SFBW    0,4
00467  C 02 07630     195   SR     SRBW    0,4
00470  C 02 14010     196   REW    REWW    0
00471  C 40 10410     197   TRT    TRTW    0
00472  C 40 14010     198   FPT    FPTW    0
00473  C 40 12010     199   BTT    BTTW    0
00474  C 40 11010     200   ETT    ETTW    0
00475  C 00 77764     201   UBSTL  PZE     UBST-*
                      202   *
                      203   *
00476  C 46 30003     204   SOO    CLR                    START
00477  C 71 02127     205          LDX     ECTL           CLEAR COUNTERS
```

```
00500  2 35 02127    206          STA     ECTL,2
00501  C 41 00500    207          BRX     *-1
00502  C 76 02101    208          LDA     IRN
00503  C 35 02102    209          STA     1RN
00504  C 71 00027    210          LDX     ADRMSK          COMPUTE MEMORY SIZE
00505  C 76 00026    211          LDA     ONES
00506  2 35 00000    212  S01     STA     0,2
00507  2 72 00000    213          SKA     0,2
00510  C 01 00513    214          BRU     S02
00511  2 77 34000    215          EAX     -2048,2
00512  C 01 00506    216          BRU     S01
               217  *
00513  C 37 00012    218  S02     STX     T1
00514  C 76 00012    219          LDA     T1
00515  C 54 00564    220          SUB     IMAGC
00516  C 35 00556    221          STA     MMRL            SAVE MEMORY MAX RECORD LENGTH
00517  C 73 00557    222          SKG     SMRL            IS MEMORY MAX > SPECIFIED MAX
00520  C 35 00557    223          STA     SMRL            NO, DROP SPECIFIED
00521  C 46 20005    224          ABC                     YES
00522  C 76 00557    225          LDA     SMRL
00523  C 73 02216    226          SKG     EIGHT           IS SPECIFIED MAX > 8
00524  C 46 00014    227          XAB                     NO, USE MEMORY MAX
00525  C 35 00560    228          STA     MRL             SAVE MAXIMUM RECORD LENGTH
00526  C 01 00573    229          BRU     W00
00527  C 01 00573    230          BRU     W00
```

```
                                PAGE
                        *
                        *               COMPUTE RECORD LENGTH SUBROUTINE.
                        *
00530  C 00 00000       CRLS    PZE
00531  C 76 02104               LDA     RRN
00532  C 14 00027               ETR     ADRMSK
00533  C 73 00560               SKG     MRL
00534  C 01 00537               BRU     *+3
00535  C 54 00560               SUB     MRL
00536  C 01 00532               BRU     *-4
00537  C 73 02215               SKG     FOUR
00540  C 55 02215               ADD     FOUR
00541  C 35 00561               STA     RL                      SAVE RECORD LENGTH
00542  C 55 00564               ADD     IMAGC
00543  C 35 00563               STA     REA                     SAVE RECORD END ADDRESS
00544  C 46 30003               CLR
00545  C 54 00561               SUB     RL
00546  C 35 00562               STA     NRL
00547  C 71 00572               LDX     REATL
00550  2 76 40572               LDA*    REATL,2
00551  C 14 02206               ETR     C31                     77740000
00552  C 16 00563               MRG     REA
00553  2 35 40572               STA*    REATL,2
00554  C 41 00550               BRX     *-4
00555  C 51 00530               BRR     CRLS
                        *
                        *
00556  C 00 00000       MMRL    PZE                             MEMORY MAX RECORD LENGTH
00557  C 00 00000       SMRL    PZE                             SPECIFIED MAX RECORD LENGTH
00560  C 00 00000       MRL     PZE                             MAXIMUM RECORD LENGTH
00561  C 00 00000       RL      PZE                             RECORD LENGTH
00562  C 00 00000       NRL     PZE                             NEGATIVE RECORD LENGTH
00563  C 00 00000       REA     PZE                             RECORD END ADDRESS
00564  C 00 02234       IMAGC   PZE     IMAG                    IMAGE CONSTANT
                        *
                        *  RECORD END ADDRESS TABLE.
                        *
00565  C 00 00612       REAT    PZE     W04A
```

```
00566  C 00 00655    270          PZE     BMT2
00567  C 00 01360    271          PZE     BMT4
00570  C 00 01364    272          PZE     BMT5
00571  C 00 01430    273          PZE     R12A
00572  C 00 77773    274   REATL  PZE     REAT-*
```

```
                                PAGE
                          *
                          *                START WRITE PASS.
                          *
00573  1 76 00203         W00    RPF     RPPF                 R[RPPF]
00574  0 43 01036                BRM     RWAU                 REWIND ALL UNITS
00575  1 77 00200                SPF     SBF
00576  1 76 00201                RPF     ETF
00577  0 46 30003                CLR                          CLEAR WRITE RECORD COUNT
00600  0 35 02107                STA     WRC
00601  0 76 02102  >=985  1      LDA     1RN
00602  0 35 02104                STA     RRN
00603  0 43 00530         W04    BRM     CRLS                 GET RECORD LENGTH
00604  0 76 02107                LDA     WRC
00605  0 35 02234                STA     IMAG
00606  0 46 30003                CLR
00607  0 71 00562                LDX     NRL                  LOAD NEGATIVE RECORD LENGTH
00610  0 76 02104                LDA     RRN                  GENERATE RANDOM NUMBERS
00611  0 41 00612                BRX     *+1
00612  2 35 00000         W04A   STA     **,2
00613  0 67 00013                LSH     11
00614  0 55 40612                ADD*    W04A
00615  0 55 02105                ADD     KK
00616  0 41 00612                BRX     W04A
00617  0 35 02104                STA     RRN
00620  1 76 00212         W04B   RPF     WEF                  R[WRITE ERROR FLAG]
00621  1 76 00204                RPF     SW1                  R[SW1]
00622  0 43 01062         W05    BRM     TRSUBR               TAPE READY
00623  0 23 00472                EXU     FPT                  FILE PROTECT ON
00624  0 01 01021                BRU     FPE                  YES
00625  0 53 00212                SKN     WEF                  NO. PREVIOUS WRITE ERROR
00626  0 53 00200                SKN     SBF                  NO. IS THIS THE FIRST BLOCK
00627  0 01 00652                BRU     W06                  YES, NO
00630  0 23 00473                EXU     BTT                  YES, LOAD POINT
00631  0 01 00634                BRU     *+3                  YES
00632  0 23 00470                EXU     REW                  NO
00633  0 01 00622                BRU     W05
00634  0 71 02172                LDX     C19                  040000
00635  0 76 00000                LDA     **                   WAIT 400 MILLISECONDS
```

```
00636  C 41 00635     314          BRX     *-1
00637  C 23 00470     315          EXU     REW              DETERMINE TYPE OF TAPE UNIT
00640  C 71 02173     316          LDX     C20              -600
00641  C 40 21000     317  BRT1    BRTX
00642  C 71 02174     318          LDX     C21              -7200
00643  C 43 01062     319          BRM     TRSUBR
00644  C 23 00464     320          EXU     ET               ERASE STARTING LEADER
00645  C 12 00000     321  BMT1    MIB     **
00646  C 41 00645     322          BRX     *-1
00647  C 23 00460     323          EXU     TOP
00650  C 43 01056     324          BRM     BRSUBR
00651  C 01 00652     325          BRU     W06              GO TO WRITE
```

```
                                PAGE
                          *
00652  C 43 01062       W06     BRM     TRSUBR          WRITE RECORD
00653  C 71 00562               LDX     NRL
00654  C 23 00461               EXU     WT
00655  2 12 00000       BMT2    MIB     **,2
00656  C 41 00655               BRX     *-1
00657  C 23 00460               EXU     TOP
00660  C 43 01056               BRM     BRSUBR          WAIT FOR TAPE TO STOP
00661  C 23 00474               EXU     ETT             END OF TAPE
00662  1 77 00201               SPF     ETF             YES
00663  C 23 00441               EXU     BET
00664  C 01 00722               BRU     W01             YES
00665  C 43 00250               BRM     STOP            NO
00666  C 43 00350       W07     BRM     SU00            STEP UNIT NO.
00667  C 01 00671               BRU     *+2             DONE
00670  C 01 00620               BRU     W04B            CONTINUE
00671  1 76 00200               RPF     SBF             R[STARTING BLOCK FLAG]
00672  C 61 02107       W03     MIN     WRC
00673  C 76 02106               LDA     MRC
00674  C 53 00201               SKN     ETF             END OF TAPE FLAG
00675  C 73 02107               SKG     WRC             RESET, ENOUGH RECORDS
00676  C 01 00700               BRU     *+2             SET, YES
00677  C 01 00603               BRU     W04             NO
00700  C 43 00250               BRM     STOP
00701  C 43 01062       W03A    BRM     TRSUBR          WRITE EOF'S
00702  C 23 00463               EXU     WEOF
00703  C 12 02177       BMT3    MIB     C24             17
00704  C 23 00460               EXU     TOP
00705  C 43 01056               BRM     BRSUBR
00706  C 43 01062               BRM     TRSUBR
00707  C 23 00470               EXU     REW             REWIND
00710  C 43 00350               BRM     SU00            STEP UNIT NO.
00711  C 01 00713               BRU     *+2
00712  C -4 L0701               BRU     W03A
00713  C 61 02111               MIN     WPC
00714  C 43 00250               BRM     STOP
00715  C 40 20200               BPT     2
00716  C 01 00720               BRU     *+2
```

```
00717  C 43 01100    365          BRM     OPCS          OUTPUT PASS COUNTERS
00720  C 43 00250    366          BRM     STOP
00721  C 01 01327    367          BRU     ROO           TO START READ
                     368    *
```

```
                                PAGE
                        *
                        *               WRITE ERROR SUBROUTINE.
                        *
00722  0 43 01062       W01     BRM     TRSUBR                  BACKSPACE AND ERASE RECORD
00723  0 71 00562               LDX     NRL
00724  0 23 00465               EXU     ETR
00725  0 23 00703               EXU     BMT3                    USE DUMMY MIB INSTRUCTION
00726  0 41 00725               BRX     *-1
00727  0 23 00460               EXU     TOP
00730  0 43 01056               BRM     BRSUBR
00731  1 77 00212               SPF     WEF                     S(WRITE ERROR FLAG)
00732  0 43 00250               BRM     STOP
00733  0 53 00204               SKN     SW1
00734  0 01 00774               BRU     W01A                    FIRST TIME
00735  0 61 02114               MIN     RWEC                    SECOND TIME
00736  0 40 20200               BPT     2
00737  0 01 00754               BRU     W01B
00740  0 23 01276               EXU     OUT4
00741  0 71 02170               LDX     C17                     -13
00742  2 12 01014               MIW     WEM+13,2
00743  0 41 00742               BRX     *-1
00744  0 43 02050               BRM     OMAUN
00745  0 71 02165               LDX     C14                     -4
00746  2 76 01020               LDA     WEW+4,2
00747  0 75 02215               LDB     KEY
00750  0 43 01147               BRM     WOS
00751  0 41 00746               BRX     *-3
00752  0 02 14000               TOPW
00753  0 43 01066               BRM     WBRSBR
00754  0 40 20040       W01B    BPT     4
00755  0 00 00000               HLT
00756  0 43 00250               BRM     STOP
00757  1 76 00204               RPF     SW1
00760  0 43 01062               BRM     TRSUBR
00761  0 71 00562               LDX     NRL                     ERASE RECORD FORWARD
00762  0 23 00464               EXU     ET
00763  0 23 00703               EXU     BMT3                    USE DUMMY MIB INSTRUCTION
00764  0 41 00763               BRX     *-1
```

```
00765  0 23 00460    408          EXU     TOP
00766  0 43 01056    409          BRM     BRSUBR
00767  0 23 00474    410          EXU     ETT
00770  0 01 00772    411          BRU     *+2
00771  0 01 00652    412          BRU     W06
00772  1 77 00201    413          SPF     ETF
00773  0 01 00666    414          BRU     W07
```

```
                                PAGE
                        *
00774  1 77 00204       W01A    SPF     SW1                     S(SW1)
00775  0 61 02113               MIN     WEC
00776  0 01 00622               BRU     W05
                        *
                        *
00777  52121266         WEM     BCI     13,1  WRITE PASS  RECORD NO.  WRITE ERRS  REWRITE ERRS
01000  51316325
01001  12472162
01002  62121251
01003  25234651
01004  24124546
01005  33121266
01006  51316325
01007  12255151
01010  62121251
01011  25665131
01012  63251225
01013  51516212
01014  0 00 02111       WEW     PZE     WPC
01015  0 00 02107               PZE     WRC
01016  0 00 02113               PZE     WEC
01017  0 00 02114               PZE     RWEC
01020  52121212         SCRC    OCT     52121212
                        *
01021  0 23 01276       FPE     EXU     OUT4                    FILE PROTECT ERROR
01022  0 71 02154               LDX     C5                      -5
01023  2 12 01036               MIW     FPM+5,2
01024  0 41 01023               BRX     *-1
01025  0 43 02050               BRM     OMAUN
01026  0 02 14000               TOPW
01027  0 43 01066               BRM     WBRSBR
01030  0 01 00204               BRU     MC01
                        *
01031  52121226         FPM     BCI     5,1  FILE PROTECT ON
01032  31432512
01033  47514653
01034  25236312
```

01035 46451212

```
                                PAGE
                        *
                        *               REWIND ALL UNITS
                        *
01036  C 00 00000       RWAU    PZE
01037  C 76 02175               LDA     C22                     0214107
01040  C 71 02153               LDX     C3                      -8
01041  C 55 00024       RLOOP   ADD     ONE                     GENERATE REWIND INSTRUCTIONS
01042  C 17 02176               EOR     C23                     100
01043  C 35 01046               STA     RWAU1
01044  C 17 02176               EOR     C23                     0100
01045  C 35 01047               STA     RWAU2
01046  C 02 14010       RWAU1   REWW    **
01047  C 02 14110       RWAU2   REWY    **
01050  C 41 01041               BRX     RLOOP
01051  C 76 00305               LDA     UNTA                    RESET UNIT NUMBER TABLE INDEXER
01052  C 35 00306               STA     UNTI
01053  C 43 00350               BRM     SU00                    SET UP FIRST UNIT.
01054  C 20 00000               NOP
01055  C 51 01036               BRR     RWAU
                        *
                        *               BUFFER READY SUBROUTINE.
                        *
01056  C 00 00000       BRSUBR  PZE
01057  C 40 21000       BRT2    BRTX
01060  C 01 01057               BRU     *-1
01061  C 51 01056               BRR     BRSUBR
                        *
                        *               TAPE UNIT READY SUBROUTINE.
                        *
01062  C 00 00000       TRSUBR  PZE
01063  C 23 00471               EXU     TRT
01064  C 51 01062               BRR     TRSUBR
01065  C 01 01063               BRU     *-2
                        *
                        *               W BUFFER READY SUBROUTINE.
                        *
01066  C 00 00000       WBRSBR  PZE
01067  C 40 21000               BRTW
```

```
01070  C 01 01067     478           BRU     *-1
01071  C 51 01066     479           BRR     WBR,BR
                      480   *
                      481   *               CLEAR ERROR COUNTERS SUBROUTINE.
                      482   *
01072  C 00 00000     483   CECS    PZE
01073  C 46 30003     484           CLR
01074  C 71 02166     485           LDX     C15                     -6
01075  2 35 02127     486           STA     ECTL,2
01076  C 41 01075     487           BRX     *-1
01077  C 51 01072     488           BRR     CECS
```

```
                                PAGE
                        *
                        *                 OUTPUT PASS COUNTERS SUBROUTINE.
                        *
01100  C 00 00000       OPCS    PZE
01101  C 23 01276               EXU     OUT4
01102  C 53 00203               SKN     RPPF                    READ PASS
01103  C 01 01107               BRU     *+4                     NO
01104  C 12 01020               MIW     SCRC                    YES
01105  C 12 01136               MIW     PDM+6                   READ
01106  C 01 01111               BRU     *+3
01107  C 12 01133               MIW     PDM+3                   WRITE
01110  C 12 01134               MIW     PDM+4
01111  C 71 02171               LDX     C18                     -15
01112  2 12 01147               MIW     PDM+15.2                PASS DONE
01113  C 41 01112               BRX     *-1
01114  C 02 14000               TOPW
01115  C 43 01066               BRM     WBRSBR
01116  C 23 01275               EXU     OUT1
01117  C 71 02154               LDX     C5                      -5
01120  2 76 02141       OPCS1   LDA     OPCL+5.2
01121  C 75 00024               LDB     KEY1
01122  C 43 01147               BRM     WOS
01123  C 41 01120               BRX     OPCS1
01124  C 12 01020               MIW     SCRC
01125  C 02 14000               TOPW
01126  C 43 01066               BRM     WBRSBR
01127  C 51 01100               BRR     OPCS
                        *
                        *
01130  12472162         PDM     BCI      PASS DONE  1  WRITES   READS  WRITE ERR REWRITES BAD RE
01131  62122446
01132  45251212
01133  52121266
01134  51316325
01135  62121212
01136  51252124
01137  62121266
01140  51316325
```

```
01141  12255151
01142  12512566
01143  51316325
01144  62122221
01145  24125125
01146  21246252      520          BCI      1.ADS1
```

```
                                PAGE
                        *
                        *                OCTAL WORD OUTPUT SUBROUTINE.
                        *
01147  C 00 00000       WOS     PZE
01150  C 35 00015               STA     T4
01151  C 46 00014               XAB
01152  C 54 00024               SUB     ONE
01153  C 72 00025               SKA     SIGN
01154  C 01 01157               BRU     *+3
01155  C 12 01607               MIW     SPCHAR
01156  C 01 01152               BRU     *-4
01157  C 76 40015               LDA*    T4
01160  C 75 02153               LDP     C4                      77777770
01161  C 66 20003               RCY     3
01162  C 35 00015               STA     T4
01163  C 12 00015               MIW     T4
01164  C 67 00006               LSH     6
01165  C 72 00024               SKA     ONE
01166  C 01 01161               BRU     *-5
01167  C 51 01147               BRR     WOS
```

```
                        542             PAGE
                        543     *
                        544     *               OPERATOR REQUESTED OUTPUT ROUTINE.
                        545     *
01170   C 02 02641      546     000     TYPW    1,4
01171   C 12 01020      547             MIW     SCRC
01172   C 53 00203      548             SKN     RPPF                    PASS
01173   C 01 01176      549             BRU     *+3                     WRITE
01174   C 12 01136      550             MIW     PDM+6                   READ
01175   C 01 01200      551             BRU     *+3
01176   C 12 01133      552             MIW     PDM+3
01177   C 12 01134      553             MIW     PDM+4
01200   C 43 02090      554             BRM     GMAUN
01201   C 71 02167      555             LDX     C16                     -18
01202   C 12 01020      556     001     MIW     SCRC
01203   C 02 14000      557             TOPW
01204   C 43 01066      558             BRM     WBRSBR
01205   C 02 02641      559             TYPW    1,4
01206   2 12 01243      560             MIW     DT+18,2
01207   C 02 14000      561             TOPW
01210   C 43 01066      562             BRM     WBRSBR
01211   2 76 02152      563             LDA     CLL+18,2
01212   C 75 02213      564             LDB     TWO
01213   C 02 02041      565             TYPW    1,1
01214   C 43 01147      566             BRM     WOS
01215   C 41 01202      567             BRX     001
01216   C 02 14000      568             TOPW
01217   C 43 01066      569             BRM     WBRSBR
01220   C 01 00204      570             BRU     MC01
```

```
                                PAGE
                        *
                        *                 OUTPUT TABLE. IDENTIFIERS.
                        *
01221  44512312         OT      BCI       1.MRC
01222  44514312                 BCI       1.MRL
01223  66512312                 BCI       1.WRC
01224  51512312                 BCI       1.RRC
01225  66472312                 BCI       1.WPC
01226  51472312                 BCI       1.RPC
01227  66252312                 BCI       1.WEC
01230  51662523                 BCI       1.RWEC
01231  47512523                 BCI       1.PREC
01232  23472523                 BCI       1.CPEC
01233  43472523                 BCI       1.LPEC
01234  66232523                 BCI       1.WCEC
01235  23300112                 BCI       1.CH1
01236  23300212                 BCI       1.CH2
01237  23300312                 BCI       1.CH3
01240  23300412                 BCI       1.CH4
01241  23300512                 BCI       1.CH5
01242  23300612                 BCI       1.CH6
```

```
                                PAGE
                        *
                        *                PROGRAMMED OPERATORS.
                        *
                        SPF     POPD     17700000            SET PROGRAM FLAG
01243  0 35 01257               STA      FT1
01244  0 76 40000               LDA*     0
01245  0 16 00025               MRG      SIGN
01246  0 35 40000               STA*     0
01247  0 76 01257               LDA      FT1
01250  0 51 00000               BRR      0
                        *
                        *
                        RPF     POPD     17600000            RESET PROGRAM FLAG
01251  0 35 01257               STA      FT1
01252  0 76 40000               LDA*     0
01253  0 14 01260               ETR      FC1
01254  0 35 40000               STA*     0
01255  0 76 01257               LDA      FT1
01256  0 51 00000               BRR      0
                        *
01257  0 00 00000       FT1     PZE
01260  37777777         FC1     OCT      37777777
```

```
                        616             PAGE
                        617     *
                        618     *               SET PUNCH OR TYPE.
                        619     *
01261  C 76 01271      620     T00     LDA     T0UT1                   SET TYPE
01262  C 75 01272      621             LDB     T0UT4
01263  C 01 01266      622             BRU     P00+2
01264  C 76 01273      623     P00     LDA     P0UT1                   SET PUNCH
01265  C 75 01274      624             LDB     P0UT4
01266  C 35 01275      625             STA     0UT1
01267  C 36 01276      626             STB     0UT4
01270  C 01 00204      627             BRU     MC01
                        628     *
01271  C 02 02041      629     T0UT1   TYPW    1,1
01272  C 02 02641      630     T0UT4   TYPW    1,4
01273  C 02 02044      631     P0UT1   PPTW    1,1
01274  C 02 02644      632     P0UT4   PPTW    1,4
                        633     *
01275  C 02 02041      634     0UT1    TYPW    1,1                     PRESET TO TYPE OUT MODE
01276  C 02 02641      635     0UT4    TYPW    1,4
                        636     *
                        637     *               SET INITIAL RANDOM NUMBER.
                        638     *
01277  C 76 00245      639     N00     LDA     ACCUM
01300  C 35 02101      640             STA     IRN
01301  C 01 00202      641             BRU     CLR
                        642     *
                        643     *               SET MAXIMUM NUMBER OF RECORDS.
                        644     *
01302  C 76 00245      645     M00     LDA     ACCUM
01303  C 35 02106      646             STA     MRC
01304  C 01 00202      647             BRU     CLR
                        648     *
                        649     *               SET BCD OR BINARY MODE.
                        650     *
01305  1 77 00210      651     D00     SPF     BCDF                    SET BCD FLAG
01306  C 01 01310      652             BRU     *+2
01307  1 76 00210      653     B00     RPF     BCDF                    RESET BCD FLAG
01310  C 76 00462      654             LDA     RT
```

```
01311  C 14 01320     655          ETR     BB1
01312  C 53 00210     656          SKN     BCDF
01313  C 16 01321     657          MRG     BB2
01314  C 35 00462     658          STA     RT
01315  C 16 01322     659          MRG     BB3
01316  C 35 00461     660          STA     WT
01317  C 01 00204     661          BRU     MC01
                      662  *
01320  77776777        663  BB1     OCT     77776777
01321  00001000        664  BB2     OCT     1000
01322  00000040        665  BB3     OCT     40
                      666  *
                      667  *               SET MAXIMUM LENGTH RECORD
                      668  *
01323  C 76 00245     669  L00     LDA     ACCUM
01324  C 14 00027     670          ETR     ADRMSK
01325  C 35 00557     671          STA     SMRL            SAVE SPECIFIED MAXIMUM RECORD LENGTH
01326  C 01 00202     672          BRU     CLR
```

```
                                PAGE
                        *
                        *                START READ PASS.
                        *
01327  1 77 00203       R00     SPF     RPPF                    S[READ PASS IN PROGRESS FLAG]
01330  0 76 02102               LDA     1RN                     1ST RANDOM NUMBER TO
01331  0 35 02103               STA     RRNH                    RANDOM NUMBER HOLD.
01332  0 43 01036               BRM     RWAU                    REWIND ALL UNITS
01333  1 77 00200               SPF     SBF                     S[STARTING BLOCK FLAG]
01334  0 46 30003               CLR
01335  0 35 02110               STA     RRC
01336  1 76 00204       R07     RPF     SW1                     R[SW1,SW2]
01337  1 76 00205               RPF     SW2
01340  1 76 00213               RPF     SYNCF                   R[SYNC FLAG]
01341  1 76 00206       R08     RPF     SW3                     R[SW3,REF]
01342  1 76 00202               RPF     REF
01343  1 76 00211               RPF     CPEF                    R[CHARACTER PARITY ERROR FLAG]
01344  0 76 02103               LDA     RRNH                    MOVE RANDOM NUMBER FROM
01345  0 35 02104               STA     RRN                     HOLD TO RUN.
01346  0 43 00530               BRM     CRLS                    COMPUTE RECORD LENGTH
01347  0 43 01062       R01     BRM     TRSUBR
01350  0 53 00200               SKN     SBF                     STARTING BLOCK
01351  0 01 01356               BRU     R01A                    NO
01352  0 23 00473               EXU     BTT                     YES, LOAD POINT
01353  0 01 01356               BRU     R01A                    YES
01354  0 23 00470               EXU     REW                     NO, REWIND
01355  0 01 01347               BRU     R01
01356  0 71 00562       R01A    LDX     NRL
01357  0 23 00462               EXU     RT                      START READ
01360  2 32 00000       BMT4    BIM     **,2                    INPUT FIRST WORD
01361  0 40 21000       BRT3    BRTX                            CHECK FOR SHORT RECORD
01362  0 41 01364               BRX     *+2
01363  0 01 01771               BRU     RI2                     GO CHECK FOR EOF
01364  2 32 00000       BMT5    BIM     **,2
01365  0 40 21000       BRT4    BRTX
01366  0 41 01364               BRX     *-2
01367  0 40 21000       BRT5    BRTX                            IF BUFFER READY NOW RECORD TOO SHORT
01370  0 01 01373               BRU     R01B                    O.K.
01371  1 77 00206               SPF     SW3                     SHORT, S(SWITCH 3) WORD COUNT ERROR
```

```
01372  C 01 01410    712           BRU     RO1D
                     713     *
01373  C 23 00441    714     RO1B  EXU     BET
01374  1 77 00211    715           SPF     CPEF
01375  C 32 00012    716     BMT6  BIM     T1
01376  C 23 01367    717           EXU     BRTS          IF BUFFER NOT READY, RECORD TOO LONG
01377  C 01 01416    718           BRU     RO1C          TOO LONG
01400  C 53 00211    719           SKN     CPEF          O.K., IF NO CHAR. PARITY CHECK LONG.
01401  C 01 01404    720           BRU     **+3
01402  C 61 02116    721           MIN     CPEC          COUNT CHAR. PARITY
01403  C 01 01410    722           BRU     RO1D
01404  C 23 00441    723           EXU     BET           LONG. PARITY
01405  C 01 01407    724           BRU     **+2          YES
01406  C 01 01411    725           BRU     RO1D+1        NO
01407  C 61 02117    726           MIN     LPEC          COUNT LONG. ERROR
01410  1 77 00202    727     RO1D  SPF     REF           S(READ ERROR)
01411  C 76 00012    728           LDA     T1            GET (BUFFER) AT EOR.
01412  C 53 00206    729           SKN     SW3           PREVIOUS WORD COUNT ERROR?
01413  C 72 00026    730           SKA     ONES          NO, (BUFFER) = 0
01414  C 01 01416    731           BRU     RO1C          YES, NO: WORD COUNT ERROR PRESENT
01415  C 01 01420    732           BRU     RO3A          NO WORD COUNT ERROR
01416  C 61 02120    733     RO1C  MIN     WCEC          COUNT ERROR
01417  1 77 00202    734           SPF     REF           S(READ ERROR)
                     735     *
01420  C 76 02110    736     RO3A  LDA     RRC
01421  C 75 00026    737           LDB     ONES
01422  C 70 02234    738           SKM     IMAG          1ST WORD:RECORD COUNT
01423  C 01 01612    739           BRU     RO5           NOT EQUAL
01424  C 71 00562    740     R12   LDX     NRL           EQUAL, CHECK NUMBERS
01425  C 46 30003    741           CLR
01426  C 76 02104    742           LDA     RRN
01427  C 41 01430    743           BRX     **+1
01430  2 17 00000    744     R12A  EOR     **,2          COMPARE WORDS
01431  C 72 00026    745           SKA     ONES          CORRECT
01432  C 01 01445    746           BRU     R12B          NO
01433  C 76 02104    747           LDA     RRN           YES, GENERATE NEXT NUMBER
01434  C 67 00013    748           LSH     11
01435  C 55 02104    749           ADD     RRN
01436  C 55 02105    750           ADD     KK
```

```
01437  0 35 02104   751          STA     RRN
01440  0 41 01430   752          BRX     R124
```

```
                                PAGE
                          *
01441  C 43 01056                BRM     BRSUBR          WAIT FOR TAPE TO STOP
01442  C 53 00204                SKN     SW1             NO. TEST SW1
01443  C 01 01477                BRU     R04             RESET
01444  C 01 01525                BRU     R09             SET
                          *
                          *
01445  C 72 02210        R12B    SKA     C77             CHARACTER CORRECT
01446  C 01 01450                BRU     *+2             NO
01447  C 01 01473                BRU     R12D            YES
01450  C 53 00210                SKN     BCDF            IN BCD MODE
01451  C 01 01456                BRU     R12C            NO
01452  C 75 02210                LDB     C77             YES. WAS ERROR DUE TO 0
01453  C 70 02161                SKM     C10             TO 12 CONVERSION
01454  C 01 01456                BRU     *+2             NO
01455  C 01 01473                BRU     R12D            YES
01456  1 77 00202        R12C    SPF     REF
01457  C 72 00024                SKA     ONE             TEST LSB ERROR
01460  C 61 02126                MIN     CH6
01461  C 72 02213                SKA     TWO
01462  C 61 02125                MIN     CH5
01463  C 72 02215                SKA     FOUR
01464  C 61 02124                MIN     CH4
01465  C 72 02216                SKA     EIGHT
01466  C 61 02123                MIN     CH3
01467  C 72 02217                SKA     ZA
01470  C 61 02122                MIN     CH2
01471  C 72 02220                SKA     ZB              TEST MSB ERROR
01472  C 61 02121                MIN     CH1
01473  C 46 20005        R12D    ABC                     SHIFT CHARACTER
01474  C 66 20006                RCY     6
01475  C 46 10012                BAC
01476  C 01 01431                BRU     R12A+1
```

```
                                PAGE
                          *
01477  C 53 00202       R04     SKN     REF                 WAS THERE A READ ERROR
01500  C 01 01512               BRU     R11                 NO
01501  C 76 00024               LDA     ONE                 YES
01502  C 35 01610               STA     RTEM
01503  C 35 01611               STA     RTC
01504  1 77 00204               SPF     SW1
01505  C 43 01062       R10     BRM     TRSUBR              BACKSPACE RECORD
01506  C 23 00467               EXU     SR
01507  C 43 01056               BRM     BRSUBR
01510  C 43 00250               BRM     STOP
01511  C 01 01341               BRU     R08
                          *
01512  C 43 00350       R11     BRM     SU00                STEP UNIT NUMBER
01513  C 01 01516               BRU     *+3                 DONE
01514  C 43 00250       R11A    BRM     STOP                CONTINUE
01515  C 01 01336               BRU     R07
01516  C 61 02110               MIN     RRC                 READ RECORD COUNT + 1
01517  C 76 02104               LDA     RRN
01520  C 35 02103               STA     RRNH
01521  C 53 00200               SKN     SBF                 IF STARTING BLOCK FLAG
01522  C 01 01514               BRU     R11A                SET RESET IT
01523  1 76 00200               RPF     SBF
01524  C 01 01514               BRU     R11A
                          *
                          *
01525  C 46 30003       R09     CLR
01526  C 76 01611               LDA     RTC
01527  C 67 00001               LSH     1
01530  C 35 01611               STA     RTC
01531  C 53 00202               SKN     REF                 READ ERROR
01532  C 01 01535               BRU     *+3                 NO
01533  C 16 01610               MRG     RTEM                YES, MARK ERROR THIS TRY
01534  C 35 01610               STA     RTEM
01535  C 72 02157               SKA     C8                  TEN TRIES COMPLETE
01536  C 01 01540               BRU     *+2                 YES
01537  C 01 01505               BRU     R10                 NO
01540  C 76 02160               LDA     C9
```

```
01541  C 73 01610     826          SKG     RTEM          ANY GOOD READS
01542  C 61 02115     827          MIN     PREC          NO
01543  C 40 20200     828          BPT     2             YES, OUTPUT
01544  C 01 01600     829          BRU     R09A          NO
01545  C 43 02030     830          BRM     RS0           YES, OUTPUT READ STATUS
01546  C 23 01276     831          EXU     OUT4
01547  C 71 02155     832          LDX     C6
01550  2 12 01605     833          MIW     REM+3,2       CR READ ERROR CR
01551  C 41 01550     834          BRX     *-1
01552  C 02 14000     835          TOPW
01553  C 43 01066     836          BRM     WBRSBR
```

```
                         837          PAGE
                         838  *
01554  C 23 01275        839          EXU     OUT1
01555  C 71 02162        840          LDX     C11             -9
01556  2 76 02152        841          LDA     RECL+9,2
01557  C 75 00024        842          LDB     KEY1
01560  C 43 01147        843          BRM     WOS
01561  C 41 01556        844          BRX     *-3
01562  C 12 01020        845          MIW     SCRC            CR
01563  C 71 02164        846          LDX     C13
01564  C 76 01610        847          LDA     RTEM
01565  C 72 00024        848          SKA     ONE             TRY GOOD
01566  C 01 01571        849          BRU     *+3             NO
01567  C 12 01605        850          MIW     GCHAR           YES
01570  C 01 01572        851          BRU     *+2
01571  C 12 01606        852          MIW     BCHAR
01572  C 12 01607        853          MIW     SPCHAR
01573  C 66 00001        854          RSH     1
01574  C 41 01565        855          BRX     *-7
01575  C 02 14000        856          TOPW
01576  C 43 01066        857          BRM     WBRSBR
01577  C 43 01072        858          BRM     CECS            CLEAR ERROR COUNTERS
01600  C 43 00250        859  RO9A    BRM     STOP
01601  C 01 01512        860          BRU     R11
                         861  *
                         862  *
01602  52512521          863  REM     BCI     3,1READ ERROR1
01603  24122551
01604  51465152
                         864  *
01605  27121212          865  GCHAR   BCI     1,G
01606  22121212          866  BCHAR   BCI     1,B
01607  12121212          867  SPCHAR  BCI     1,
                         868  *
01610  C 00 00000        869  RTEM    PZE                     READ TRY ERROR MARKER
01611  C 00 00000        870  RTC     PZE                     READ TRY COUNTER
```

```
                                PAGE
                        *
01612  C 53 00210        R05     SKN     BCDF            BCD MODE
01613  C 01 01635                BRU     R05B            NO
01614  C 76 02161                LDA     C10             YES
01615  C 75 02210                LDB     C77             FOR ANY 12 IN THE RRC
01616  C 70 02110        R05A    SKM     RRC             CONVERT THE CORRESPONDING
01617  C 01 01624                BRU     *+5             00 IN THE ID WORD TO 12.
01620  C 35 00014                STA     T3
01621  C 16 02234                MRG     IMAG
01622  C 35 02234                STA     IMAG
01623  C 76 00014                LDA     T3
01624  C 67 00006                LSH     6
01625  C 72 00024                SKA     ONE             DONE
01626  C 01 01630                BRU     *+2             YES
01627  C 01 01616                BRU     R05A            NO
01630  C 76 02110                LDA     RRC
01631  C 75 00026                LDB     ONES
01632  C 70 02234                SKM     IMAG            CORRECTED 1ST WORD:RRC
01633  C 01 01635                BRU     R05B            NOT EQUAL
01634  C 01 01424                BRU     R12             EQUAL
01635  C 53 00213        R05B    SKN     SYNCF           1ST TRY
01636  C 01 01706                BRU     R05G            YES
01637  C 53 00205                SKN     SW2             NO. TEST SW 2
01640  C 01 01642                BRU     *+2             RESET
01641  C 01 01730                BRU     R13             SET
01642  C 54 02234                SUB     IMAG            N = RRC - 1ST WORD
01643  C 54 00024                SUB     ONE             N = N - 1
01644  C 75 02234        IMAGL   LDB     IMAG            SAVE 1ST WORD
01645  C 36 01711        SAVEL   STB     SAVE
01646  C 43 01056                BRM     BRSUBR
01647  C 72 00026                SKA     ONES            N = 0
01650  C 01 01653                BRU     *+3             NOT EQUAL
01651  1 77 00205        R05C    SPF     SW2             EQUAL
01652  C 01 01340                BRU     R08-1
01653  C 72 00025                SKA     SIGN            N : 0
01654  C 01 01674                BRU     R05D            LESS
01655  C 17 00026                EOR     ONES            GREATER. COMPLIMENT COUNT
01656  C 55 00024                ADD     ONE
```

```
01657  0 35 00013    910          STA    T2          SAVE COUNT
01660  0 75 02163    911          LDB    C12         07777
01661  0 43 01062    912   R05E   BRM    TRSUBR      GREATER, SPACE FORWARD
01662  0 23 00466    913          EXU    SF
01663  0 32 00012    914   BMT7   BIM    T1
01664  0 76 00012    915          LDA    T1          END OF FILE?
01665  0 70 02177    916          SKM    C24         1717
01666  0 01 01670    917          BRU    *+2         NO
01667  0 01 01712    918          BRU    R15         YES
01670  0 61 00013    919          MIN    T2
01671  0 53 00013    920          SKN    T2          DONE
01672  0 01 01704    921          BRU    R05F        YES
01673  0 01 01662    922          BRU    R05E+1      NO
```

```
                          PAGE
                    *
01674  0 43 01062   R05D   BRM    TRSUBR
01675  0 23 00467          EXU    SR
01676  0 23 01663          EXU    BMT7
01677  0 23 00473          EXU    BTT                 LOAD POINT
01700  0 01 01720          BRU    R15A                YES
01701  0 55 00024          ADD    ONE                 NO
01702  0 72 00025          SKA    SIGN                DONE
01703  0 01 01675          BRU    R05D+1              NO
01704  0 43 01056   R05F   BRM    BRSUBR              YES
01705  0 01 01651          BRU    R05C
                    *
01706  1 77 00213   R05G   SPF    SYNCF               S(SYNC. FLAG)
01707  0 43 01056          BRM    BRSUBR              WAIT FOR TAPE TO STOP
01710  0 01 01505          BRU    R10                 BACKSPACE AND READ AGAIN
                    *
01711  0 00 00000   SAVE   PZE                        TO HOLD 1ST WORD
```

```
                                PAGE
                        *
01712  C 23 01276        R15     EXU     OUT4
01713  C 12 01753                MIW     TMM
01714  C 12 01754                MIW     TMM+1
01715  C 12 01755                MIW     TMM+2
01716  C 02 14000                TOPW
01717  C 43 01066                BRM     WBRSBR
01720  C 23 00473        R15A    EXU     BTT                     LOAD POINT
01721  C 01 01723                BRU     *+2                     YES
01722  C 01 01730                BRU     R13                     NO
01723  C 23 01276                EXU     OUT4
01724  C 12 01756                MIW     LPM
01725  C 12 01757                MIW     LPM+1
01726  C 12 01760                MIW     LPM+2
01727  C 02 14000                TOPW
01730  C 43 01066        R13     BRM     WBRSBR
01731  C 43 02030                BRM     RSO                     OUTPUT READ STATUS
01732  C 23 01276                EXU     OUT4
01733  C 71 02153                LDX     C3                      -8
01734  2 12 01771                MIW     RPAM+8.2                READ PASS ABORT MESSAGE
01735  C 41 01734                BRX     *-1
01736  C 02 14000                TOPW
01737  C 43 01066                BRM     WBRSBR
01740  C 76 01645                LDA     SAVEL
01741  C 75 02215                LDB     KEY
01742  C 23 01275                EXU     OUT1
01743  C 43 01147                BRM     WOS
01744  C 76 01644                LDA     IMAGL
01745  C 75 02215                LDB     KEY
01746  C 43 01147                BRM     WOS
01747  C 12 01020                MIW     SCRC
01750  C 02 14000                TOPW
01751  C 43 01066                BRM     WBRSBR
01752  C 01 02005                BRU     R14
                        *
01753  52632147          TMM     BCI     3.1TAPE MARK
01754  25124421
01755  51421212
```

```
01756  52434621      978   LPM    BCI     3.↓LOAD POINT
01757  24124746
01760  31456312
01761  52512521      979   RPAM   BCI     8.↓READ PASS ABORT. OUT OF SYNC.↓
01762  24124721
01763  62621221
01764  22465163
01765  73124664
01766  63124626
01767  12627045
01770  23335212
```

```
                        PAGE
                  *
                  *                CHECK FOR END OF FILE
                  *
01771  C 76 02234  RI2    LDA     IMAG                 PICK UP FIRST WORD OF IMAGE
01772  C 75 02200         LDB     C25                  077770000
01773  C 70 02177         SKM     C24                  END OF FILE
01774  C 40 20200         BPT     2                    NO
01775  C 01 02005         BRU     R14                  YES
01776  C 43 02030         BRM     RSO                  OUTPUT READ STATUS
01777  C 23 01276         EXU     OUT4
02000  C 71 02166         LDX     C15                  -6
02001  2 12 02030         MIW     EFREM+6,2
02002  C 41 02001         BRX     *-1
02003  C 02 14000         TOPW
02004  C 43 01066         BRM     WBRSBR
02005  C 43 01036  R14    BRM     RWAU                 REWIND ALL UNITS
02006  C 61 02112         MIN     RPC                  COUNT READ PASS
02007  C 40 20200         BPT     2
02010  C 01 02012         BRU     *+2
02011  C 43 01100         BRM     OPCS                 OUTPUT PASS COUNTERS
02012  C 40 20040         BPT     4                    HALT
02013  C 00 00000         HLT                          YES
02014  C 43 00250         BRM     STOP                 NO
02015  C 40 20100         BPT     3                    REREAD
02016  C 01 01327         BRU     ROO                  YES
02017  C 76 02104         LDA     RRN                  NO
02020  C 35 02102         STA     1RN
02021  C 01 00573         BRU     WOO                  GO TO WRITE
                  *
                  *
02022  52254524   EFREM  BCI     6,1END OF FILE READ ERROR
02023  12462612
02024  26314325
02025  12512521
02026  24122551
02027  51465112
```

```
                        1012            PAGE
                        1013    *
                        1014    *               REAd STATUS OUTPUT SUBROUTINE.
                        1015    *
02030   C 00 00000      1016    RS0     PZE
02031   C 23 01276      1017            EXU     OUT4
02032   C 71 02166      1018            LDX     C15             -6
02033   2 12 02227      1019            MIW     RS0M1+6,2
02034   C 41 02033      1020            BRX     *-1
02035   C 43 02050      1021            BRM     0MAUN
02036   C 76 02135      1022            LDA     RPCL
02037   C 75 00024      1023            LDB     KEY1
02040   C 43 01147      1024            BRM     W0S
02041   C 76 02133      1025            LDA     RRCL
02042   C 75 02215      1026            LDB     KEY
02043   C 43 01147      1027            BRM     W0S
02044   C 12 01020      1028            MIW     SCRC
02045   C 02 14000      1029            T0PW
02046   C 43 01066      1030            BRM     WBR,BR
02047   C 61 02030      1031            BRR     RS0
                        1032    *
02050   C 00 00000      1033    0MAUN   PZE                     OUTPUT MODE AND UNIT NO. SUBR
02051   C 53 00210      1034            SKN     BCDF            BCD MODE
02052   C 01 02055      1035            BRU     *+3             NO
02053   C 12 02227      1036            MIW     RS0M2           YES
02054   C 01 02057      1037            BRU     *+3
02055   C 12 02230      1038            MIW     RS0M3
02056   C 12 02231      1039            MIW     RS0M3+1
02057   C 12 02232      1040            MIW     RS0M4
02060   C 12 02233      1041            MIW     RS0M4+1
02061   C 02 14000      1042            T0PW
02062   C 43 01066      1043            BRM     WBR,BR
02063   C 76 02050      1044            LDA     0MAUN           IF ENTRANCE FROM OPERATOR REQUESTED
02064   C 02 02041      1045            TYPW    1,1             OUTPUT ROUTINE. ALWAYS TYPE.
02065   C 72 02211      1046            SKA     C200
02066   C 23 01275      1047            EXU     OUT1
02067   C 76 00304      1048            LDA     UN
02070   C 66 00006      1049            RSH     6
02071   C 36 00012      1050            STB     T1
```

```
02072  C 66 00006   1051           RSH     6
02073  C 36 00013   1052           STB     T2
02074  C 12 01607   1053           MIW     SPCHAR          SPACE
02075  C 12 00013   1054           MIW     T2
02076  C 12 00012   1055           MIW     T1
02077  C 12 01020   1056           MIW     SCRC            CR
02100  C 51 02050   1057           BRR     CMAIN
                    1058   *
                    1059   *
           00023    1060   ZERO    BOOL    23              00000000
           00024    1061   ONE     BOOL    24              00000001
           00025    1062   SIGN    BOOL    25              40000000
           00026    1063   ONES    BOOL    26              77777777
           00027    1064   ADRMSK  BOOL    27              00037777
```

```
                    1065          PAGE
                    1066    *
                    1067    *               FLAG AND SWITCH ASSIGNMENTS.
                    1068    *
            00200   1069    SBF     EQU     MCOO                    STARTING BLOCK FLAG
            00201   1070    ETF     EQU     MCOO+1                  END OF TAPE FLAG
            00202   1071    REF     EQU     MCOO+2                  READ ERROR FLAG
            00203   1072    RPPF    EQU     MCOO+3                  READ PASS IN PROGRESS FLAG
            00204   1073    SW1     EQU     MCOO+4                  SWITCH 1
            00205   1074    SW2     EQU     MCOO+5                  SWITCH 2
            00206   1075    SW3     EQU     MCOO+6                  SWITCH 3
            00207   1076    SW4     EQU     MCOO+7                  SWITCH 4
            00210   1077    BCDF    EQU     MCOO+8                  BCD FLAG
            00211   1078    CPEF    EQU     MCOO+9                  CHARACTER PARITY ERROR FLAG
            00212   1079    WEF     EQU     MCOO+10                 WRITE ERROR FLAG
            00213   1080    SYNCF   EQU     MCOO+11                 SYNC. FLAG
                    1081    *
                    1082    *               RANDOM NUMBER STORAGE.
                    1083    *
02101   C 00 00000  1084    IRN     PZE                             INITIAL RANDOM NUMBER
02102   C 00 00000  1085    IRN     PZE                             FIRST RANDOM NUMBER
02103   C 00 00000  1086    RRNH    PZE                             RUNNING RANDOM NUMBER HOLD
02104   C 00 00000  1087    RRN     PZE                             RUNNING RANDOM NUMBER
02105   23146565    1088    KK      OCT     23146565                KLUGE CONSTANTS
                    1089    *
                    1090    *               RECORD COUNTERS.
                    1091    *
02106   C 00 00000  1092    MRC     PZE                             MAXIMUM RECORD COUNT
02107   C 00 00000  1093    WRC     PZE                             WRITE RECORD COUNT
02110   C 00 00000  1094    RRC     PZE                             READ RECORD COUNT
                    1095    *
                    1096    *               PASS COUNTERS
                    1097    *
02111   C 00 00000  1098    WPC     PZE                             WRITE PASS COUNT
02112   C 00 00000  1099    RPC     PZE                             READ PASS COUNT
                    1100    *
                    1101    *               ERROR COUNTERS.
02113   C 00 00000  1102    WEC     PZE                             WRITE ERROR COUNT
02114   C 00 00000  1103    RWEC    PZE                             REWRITE ERROR COUNT
```

```
02115  C 00 00000   1104   PREC   PZE                    PERMANENT READ ERROR COUNT
02116  C 00 00000   1105   CPEC   PZE                    CHARACTER PARITY ERROR COUNT
02117  C 00 00000   1106   LPEC   PZE                    LOGITUDINAL PARITY ERROR COUNT
02120  C 00 00000   1107   WCEC   PZE                    WORD COUNT ERROR COUNT
02121  C 00 00000   1108   CH1    PZE                    READ ERRORS IN CHANNEL 1
02122  C 00 00000   1109   CH2    PZE                    READ ERRORS IN CHANNEL 2
02123  C 00 00000   1110   CH3    PZE                    READ ERRORS IN CHANNEL 3
02124  C 00 00000   1111   CH4    PZE                    READ ERRORS IN CHANNEL 4
02125  C 00 00000   1112   CH5    PZE                    READ ERRORS IN CHANNEL 5
02126  C 00 00000   1113   CH6    PZE                    READ ERRORS IN CHANNEL 6
02127  C 00 77762   1114   ECTL   PZE*     WPC-*         END OF COUNTER TABLE AND LENGTH
```

```
                        1115            PAGE
                        1116    *
                        1117    *               COUNTER LOCATIONS.
                        1118    *
02130   C 00 02106      1119    CLL     PZE     MRC
02131   C 00 00560      1120            PZE     MRL
02132   C 00 02107      1121            PZE     WRC
02133   C 00 02110      1122    RRCL    PZE     PRC
                        1123    *
02134   C 00 02111      1124    WPCL    PZE     WPC
02135   C 00 02112      1125    RPCL    PZE     RPC
02136   C 00 02113      1126            PZE     WEC
02137   C 00 02114      1127            PZE     RWEC
02140   C 00 02115      1128            PZE     PREC
                        1129    *
02141   C 00 02116      1130    RECL    PZE     CPEC
02142   C 00 02117      1131            PZE     LPEC
02143   C 00 02120      1132            PZE     WCEC
02144   C 00 02121      1133            PZE     CH1
02145   C 00 02122      1134            PZE     CH2
02146   C 00 02123      1135            PZE     CH3
02147   C 00 02124      1136            PZE     CH4
02150   C 00 02125      1137            PZE     CH5
02151   C 00 02126      1138            PZE     CH6
```

```
                          PAGE
                  *
                  *                GENERAL CONSTANTS.
                  *
02152  07700000   C1      OCT      07700000
02153  77777770   C3      DEC      -8
          02153   C4      EQU      C3                    OCT    77777770
02154  77777773   C5      DEC      -5
02155  77777775   C6      DEC      -3
02156  00000007   C7      OCT      7
02157  00001000   C8      OCT      1000
02160  00001777   C9      OCT      1777
02161  00000012   C10     OCT      12
02162  77777767   C11     DEC      -9
02163  00007777   C12     OCT      7777
02164  77777756   C13     DEC      -10
02165  77777774   C14     DEC      -4
02166  77777772   C15     DEC      -6
02167  77777756   C16     DEC      -18
02170  77777763   C17     DEC      -13
02171  77777761   C18     DEC      -15
02172  00040000   C19     OCT      40000
02173  77776650   C20     DEC      -600
02174  77761740   C21     DEC      -7200
02175  00214107   C22     OCT      214107
02176  00000100   C23     OCT      100
02177  17171717   C24     OCT      17171717
02200  77770000   C25     OCT      77770000
02201  77777670   C26     OCT      77777670
02202  77777677   C27     OCT      77777677
02203  77577777   C28     OCT      77577777
02204  00000073   C29     OCT      73
02205  00000107   C30     OCT      107
02206  77740000   C31     OCT      77740000
02207  00000052   C52     OCT      52
02210  00000077   C77     OCT      77
02211  37777600   C200    OCT      37777600
                  *
02212  2 17 02234 EORN    EOR      IMAG.2
```

```
                          1178    *
02213   C0000002          1179    TWO     DEC     2
02214   C0000003          1180    THREE   DEC     3
02215   C0000004          1181    FOUR    DEC     4
02216   C0000010          1182    EIGHT   DEC     8
02217   C0000020          1183    ZA      OCT     20
02220   C0000040          1184    ZB      OCT     40
                          1185    *
              00012       1186    T1      BOOL    12
              00013       1187    T2      BOOL    13
              00014       1188    T3      BOOL    14
              00015       1189    T4      BOOL    15
                          1190    *
              02215       1191    KEY     EQU     FOUR
              00024       1192    KEY1    EQU     ONE
                          1193    *
02221   52512521          1194    RSOM1   BCI     6,1READ PASS   RECORD NO.
02222   24124721
02223   62621212
02224   12512523
02225   46512412
02226   45469312
02227   12222324          1195    RSOM2   BCI     1, BCD
02230   12223145          1196    RSOM3   BCI     2, BINARY
02231   21517012
02232   12644531          1197    RSOM4   BCI     2, UNIT NO
02233   63124546
```

```
                    1198            PAGE
                    1199    *
                    1200    *               CONTROL CHARACTER DEFINITIONS.
                    1201    *
                    1202    B       OPD     2200000
                    1203    C       OPD     2300000
                    1204    D       OPD     2400000
                    1205    L       OPD     4300000
                    1206    M       OPD     4400000
                    1207    N       OPD     4500000
                    1208    O       OPD     4600000
                    1209    P       OPD     4700000
                    1210    R       OPD     5100000
                    1211    S       OPD     6200000
                    1212    T       OPD     6300000
                    1213    U       OPD     6400000
                    1214    CR      OPD     5200000
                    1215    SP      OPD     1200000
                    1216    TAB     OPD     7200000
                    1217    *
                    1218    *
                    1219    MIB     OPD     01200000
                    1220    BIM     OPD     03200000
                    1221    BRTX    OPD     04021000
                    1222    *
                    1223    *
02254       07777   1224    IMAG    BSS     4095
                    1225    *
                    1226    *
                    1227            LOAD
            00200   1228            END     MCOO
```

ADRMSK	C0027	BRSUBR	01056	G0MC01	00252	SPCHAR	01607
TRSUBR	C1062	WBRSBR	01066	ACCUM	00245	BCHAR	01606
DIGIT	C0240	EFREM	02022	EIGHT	02216	GCHAR	01605
IMAGC	C0564	IMAGL	01644	0MAUN	02050	0PCS1	01120
P0UT1	C1278	P0UT4	01274	REATL	00572	RL00P	01041
RS0M1	C2221	RS0M2	02227	RS0M3	02230	RS0M4	02232
RWAU1	C1046	RWAU2	01047	SAVEL	01645	SYNCF	00213
THREE	C2214	T0UT1	01271	T0UT4	01272	UBSTL	00475
BCDF	C0210	BMT1	00645	BMT2	00655	BMT3	00703
BMT4	C1360	BMT5	01364	BMT6	01375	BMT7	01663
BMTL	C0457	BRT1	00641	BRT2	01057	BRT3	01361
BRT4	C1365	BRT5	01367	BRTL	00447	BRTX	02234
C200	C2211	CEC5	01072	CPEC	02116	CPEF	00211
CRLS	C0530	ECTL	02127	E0RN	02212	F0UR	02215
IMAG	C2234	KEY1	00024	LPEC	02117	MC00	00200
MC01	C0204	MMRL	00556	0NES	00026	0PCL	02134
0PCS	C1100	0UT1	01275	0UT4	01276	PREC	02115
R01A	C1356	R01B	01373	R01C	01416	R01D	01410
R03A	C1420	R05A	01616	R055	01635	R05C	01651
R05D	C1674	R05E	01661	R05F	01704	R05G	01706
R09A	C1600	R11A	01514	R12A	01430	R12B	01445
R12C	C1456	R12D	01473	R15A	01720	REAT	00565
RECL	C2141	RPAM	01761	RPCL	02135	RPPF	00203
RRCL	C2133	RRNH	02103	RTEM	01610	RWAU	01036
RWEC	C2114	SAVE	01711	SCRC	01020	SIGN	00025
SMRL	C0557	ST0P	00250	SU00	00350	SU01	00436
SU02	C0358	SU99	00434	UBST	00461	UNTB	00305
UNTI	C0306	UNTL	00307	W01A	00774	W01B	00754
W03A	C0701	W04A	00612	W04B	00620	WCEC	02120
WE0F	C0463	ZER0	00023	1RN	02102	800	01307
881	C1320	882	01321	883	01322	8ET	00441
BIM	C2234	BMT	00450	BRT	00442	BTT	00473
C00	C0246	C10	02161	C11	02162	C12	02163
C13	C2164	C14	02165	C15	02166	C16	02167
C17	C2170	C18	02171	C19	02172	C20	02173
C21	C2174	C22	02175	C23	02176	C24	02177
C25	C2200	C26	02201	C27	02202	C28	02203
C29	C2204	C30	02205	C31	02206	C52	02207
C77	C2210	CH1	02121	CH2	02122	CH3	02123

IDENTIFICATION: Buffered Line Printer Memory Dump

AUTHOR: R. Wilborn, SDS

ACCEPTED: January 11, 1964

COMPUTER CONFIGURATION: Any SDS 910 or SDS 920 with an SDS Model 9173 buffered line printer.

PURPOSE: To provide a method of printing the contents of memory via the line printer.

PROGRAMMED OPERATORS: None.

STORAGE: 204 including output buffers.

TIMING: Will print at the maximum rate of the line printer.

USE:

1. The Line Printer Memory Dump Program is in relocatable format with a relocating loader. To load the program at Location L, enter L in the A register and follow the normal fill procedure.

2. After loading, the program will halt. The area to be dumped is defined by loading the A and B registers.

   A = Starting Location

   B = End Location

3. Following the dump, the paper in the printer is restored to the home position. Another dump may be initiated at this time.

METHOD: Data is printed 8 memory locations per line, 50 lines per page. The address of the first word is displayed at the left of each line. If the entire line is zero, a line of blanks will be printed.

```
                                1  *
                                2  * MEMORY DUMP ON THE LINE PRINTER      R WILBORN      5
                                3  *
                                4          REL                          RELOCATABLE FORMAT
00000  0 00 00000     5  MC00   HLT
00001  4 35 00224     6          STA     START,4
00002  4 36 00221     7          STB     FINISH,4
00003  0 40 12060     8          PRTW    1
00004  4 01 37777     9          BRU     *-1,4
00005  0 46 30003    10          CLR
00006  4 35 00216    11          STA     SKIP,4
00007  4 71 00204    12  MC10    LDX     M8,4
00010  4 76 00215    13          LDA     START,4
00011  4 35 00317    14          STA     TEMP,4
00012  4 76 00176    15          LDA     C3,4
00013  4 35 00206    16          STA     COUNT1,4
00014  4 76 00173    17          LDA     C0,4
00015  4 75 00201    18          LDB     OM23,4
00016  4 70 40312    19  MC14    SKM*    TEMP,4
00017  4 01 00024    20          BRU     MC16,4
00020  4 61 00310    21          MIN     TEMP,4
00021  4 41 37775    22          BRX     MC14,4
00022  4 76 00167    23          LDA     C7,4                 ZERO LINE
00023  4 55 00202    24          ADD     START,4
00024  4 35 00201    25          STA     START,4              ADVANCE COUNTER
00025  4 43 00115    26          BRM     DONE,4               CHECK FOR FINISH
00026  4 53 00176    27          SKN     SKIP,4               WAS LAST LINE ZERO
00027  4 01 00002    28          BRU     *+2,4                NO
00030  4 01 37757    29          BRU     MC10,4               YES
00031  4 76 00162    30          LDA     M8,4
00032  4 35 00172    31          STA     SKIP,4               SET FLAG
00033  0 40 12060    32          SKS     READY
00034  4 01 37777    33          BRU     *-1,4
00035  0 02 02660    34          PLPW    1,4
00036  0 02 14000    35          TOPW
00037  0 40 12060    36          SKS     READY
00040  4 01 37777    37          BRU     *-1,4
00041  0 02 10460    38          EOM     STEP
00042  4 01 37745    39          BRU     MC10,4
00043  0 46 30003    40  MC16    CLR                          SET FLAG
00044  4 35 00160    41          STA     SKIP,4
00045  4 71 00142    42          LDX     C0,4
00046  4 77 00225    43          EAX     BUFFER+4,4
00047  4 37 00153    44          STX     DATA,4               SET INDIRECT CELL
00050  4 71 00144    45          LDX     M33,4
00051  6 76 00216    46          LDA     IMAGE+33,6           SET OUTPUT IMAGE
00052  6 35 00256    47          STA     BUFFER+33,6
00053  4 41 37776    48          BRX     *-2,4
00054  4 75 00151    49          LDB     START,4              CONVERT TO OCTAL
00055  4 43 00116    50          BRM     BCD0,4
00056  0 67 20014    51          LCY     12
00057  4 16 00212    52          MRG     BUFFER+2,4
00060  4 35 00211    53          STA     BUFFER+2,4
00061  0 46 00014    54          XAB
```

```
00062  4 16 00206      55          MRG     BUFFER+1,4          STORE LOCATION
00063  4 35 00205      56          STA     BUFFER+1,4
00064  4 76 00124      57          LDA     C3,4                LOOP COUNTER
00065  4 35 00134      58          STA     COUNT1,4
00066  4 75 40137      59  MC20    LDB*    START,4             EVEN WORD
00067  4 43 00104      60          BRM     0C00,4
00070  0 46 00014      61          XAB
00071  4 35 40131      62          STA*    DATA,4
00072  4 61 00130      63          MIN     DATA,4
00073  0 46 00014      64          XAB
00074  4 35 40126      65          STA*    DATA,4
00075  4 61 00125      66          MIN     DATA,4
00076  4 61 00124      67          MIN     DATA,4
00077  4 43 00043      68          BRM     DONE,4              CHECK FOR FINISH
00100  4 75 40125      69          LDB*    START,4             SPLIT WORD
00101  4 43 00072      70          BRM     0C00,4
00102  0 56 20014      71          RCY     12
00103  0 46 00014      72          XAB
00104  4 35 00224      73          STA     TEMP,4
00105  4 14 00112      74          ETR     12M23,4
00106  4 16 40114      75          MRG*    DATA,4
00107  4 35 40113      76          STA*    DATA,4
00110  4 61 00112      77          MIN     DATA,4
00111  0 46 10012      78          BAC
00112  4 35 40110      79          STA*    DATA,4
00113  4 61 00107      80          MIN     DATA,4
00114  4 76 00214      81          LDA     TEMP,4
00115  4 14 00100      82          ETR     0M17,4
00116  4 16 40104      83          MRG*    DATA,4
00117  4 35 40103      84          STA*    DATA,4
00120  4 61 00102      85          MIN     DATA,4
00121  4 61 00101      86          MIN     DATA,4
00122  4 43 00020      87          BRM     DONE,4              CHECK FOR FINISH
00123  4 60 00076      88          REDUCE  COUNT1,4
00124  0 20 00000      89          NOP
00125  4 53 00074      90          SKN     COUNT1,4
00126  4 01 37740      91          BRU     MC20,4              NOT DONE
00127  0 40 12060      92          SKS     READY
00130  4 01 37777      93          BRU     *-1,4
00131  4 71 00063      94          LDX     M33,4
00132  0 02 02660      95  MC30    PLPW    1,4
00133  6 12 00175      96          MIW     BUFFER+33,6
00134  4 41 37777      97          BRX     *-1,4
00135  0 02 14000      98          TOPW
00136  0 40 12060      99          SKS     READY
00137  4 01 37777     100          BRU     *-1,4
00140  0 02 10460     101          EOM     STEP
00141  4 01 37646     102          BRU     MC10,4
```

```
                                  PAGE
                          *
                          * S/R TO CHECK FOR FINISH
                          *
00142  0 00 00000         DONE    PZF     **
00143  4 61 00062                 MIN     START.4
00144  4 76 00061                 LDA     START.4
00145  4 73 00056                 SKG     FINISH.4
00146  4 51 37774                 BRR     DONE.4                  NOT DONE
00147  4 76 00051                 LDA     BLANK.4
00150  4 71 00042         DONE2   LDX     M7.4
00151  4 35 40051                 STA*    DATA.4
00152  4 61 00050                 MIN     DATA.4
00153  4 41 37776                 BRX     *-2.4
00154  4 60 00045                 REDUCE  COUNT1.4
00155  0 20 00000                 NOP
00156  4 53 00043                 SKN     COUNT1.4
00157  4 01 37771                 BRU     DONE2.4
00160  0 40 12060                 SKS     READY
00161  4 01 37777                 BRU     *-1.4
00162  4 71 00032                 LDX     M33.4
00163  0 02 02660                 PLPW    1.4
00164  6 12 00144                 MIW     BUFFER+33.6
00165  4 41 37777                 BRX     *-1.4
00166  0 02 14000                 TOPW
00167  0 40 12060                 SKS     READY
00170  4 01 37777                 BRU     *-1.4
00171  0 02 11460                 EOM     TOP
00172  4 01 37606                 BRU     MC00.4
```

```
                                PAGE
                        *
                        * OCTAL CONVERT
                        *
                        *
00173  0 00 00000       OCOO    PZE     **                  OCTAL CONCERT
00174  4 71 00017               LDX     M8,4
00175  4 76 00012               LDA     C0,4
00176  0 67 00003               LSH     3
00177  6 35 00141               STA     TEMP+8,6
00200  4 41 37775               BRX     *-3,4
00201  4 71 00012               LDX     M8,4
00202  0 46 30003               CLR
00203  0 67 20006               LCY     6
00204  6 16 00134               MRG     TEMP+8,6
00205  4 41 37776               BRX     *-2,4
00206  4 51 37765               BRR     OCOO,4
```

```
                        149            PAGE
                        150    *
                        151    * PROGRAM CONSTANTS AND PARAMETERS
                        152    *
                        153    REDUCE  OPD     06000000
00207   00000000        154    C0      DEC     0
00210   00000003        155    C3      DEC     3
00211   00000007        156    C7      DEC     7
00212   77777771        157    M7      DEC     -7
00213   77777770        158    M8      DEC     -8
00214   77777737        159    M33     DEC     -33
00215   77770000        160    OM17    OCT     77770000
00216   77777777        161    OM23    OCT     77777777
00217   00007777        162    12M23   OCT     7777
00220   12121212        163    BLANK   BCI     1.
00221   0 00 00000      164    COUNT1  PZE     **
00222   0 00 00000      165    DATA    PZE     **
00223   0 00 00000      166    FINISH  PZE     **
             12060      167    READY   BOOL    12060
00224   0 00 00000      168    SKIP    PZE     **                    LINE SKIP FLAG
00225   0 00 00000      169    START   PZE     **
             10460      170    STEP    BOOL    10460
             11460      171    TOP     BOOL    11460
00226   12121212        172    IMAGE   BCI     11.     00000     00000000     00000000
00241   00000000        173            BCI     11.00000000     00000000     00000000   0
00254   00000000        174            BCI     11.000000     00000000     00000000
00267        00041      175    BUFFER  BSS     33
00330        00010      176    TEMP    BSS     8
             00000      177            END     MCOO
```

IDENTIFICATION: Line Printer Test Program

AUTHOR: R. Wilborn, SDS

ACCEPTED: 19 June 1963

COMPUTER CONFIGURATION: Any SDS 920 or SDS 910 with an SDS Model 9170 line printer.

PURPOSE: To provide an acceptance test for the SDS Model 9170 line printer.

PROGRAMMED OPERATORS: None

STORAGE: Octal locations 200-3000 (1408 words)

TIMING: The printer is driven at its maximum rate:

300 lines per minute printing, or

120 lines per second while slewing.

USE: The Line Printer Test Program is on a self-loading paper tape.

1. Load the program by the normal Fill procedure. When the program is loaded, the computer will halt.

2. The paper should be adjusted in the printer such that the perforation between sheets is directly over the hammers. After the initial setting, the program will maintain form control and the page will be restored after each test.

3. Select the functions to be tested before clearing the halt.

   BP 1 Set: No action.

   Reset: Each character is printed in every print position (Figure 1).

   BP 2 Set: No action.

   Reset: Tab and backspace features are utilized (Figure 2).

USE: (cont..)

BP 3 Set: No action.

Reset: Slew 1 page (Figure 3).

BP 4 Set: No action.

Reset: Vertical and horizontal control are checked by printing a checkerboard of E's (Figure 4).

Testing will continue as long as the particular test is called for by the breakpoints being reset. If all the breakpoints are set the program will loop until a test is called for.

METHOD: Not applicable.

Figure 1

** SDS 8N-LINE PRINTER TESTER **

Catalog No. 064001

* THE F8LL8WING TEST WILL PRINT EVERY CHARACTER IN EVERY P8SITI8N.

```
ABCDEFGHIJKLMN8PQRSTUVWXYZ0123456789 =':>/+.)[<-$*]:& /(\ABCDEFGHIJKLMN8PQRSTUVWXYZ0123456789 =':>/+.)[<-$*]:& /.(\ABCDEFGHIJKLMN8PQ
BCDEFGHIJKLMN8PQRSTUVWXYZ0123456789 =':>/+.)[<-$*]:& /(\ABCDEFGHIJKLMN8PQRSTUVWXYZ0123456789 =':>/+.)[<-$*]:& /.(\ABCDEFGHIJKLMN8PQR
CDEFGHIJKLMN8PQRSTUVWXYZ0123456789 =':>/+.)[<-$*]:& /(\ABCDEFGHIJKLMN8PQRSTUVWXYZ0123456789 =':>/+.)[<-$*]:& /.(\ABCDEFGHIJKLMN8PQRS
DEFGHIJKLMN8PQRSTUVWXYZ0123456789 =':>/+.)[<-$*]:& /(\ABCDEFGHIJKLMN8PQRSTUVWXYZ0123456789 =':>/+.)[<-$*]:& /.(\ABCDEFGHIJKLMN8PQRST
EFGHIJKLMN8PQRSTUVWXYZ0123456789 =':>/+.)[<-$*]:& /(\ABCDEFGHIJKLMN8PQRSTUVWXYZ0123456789 =':>/+.)[<-$*]:& /.(\ABCDEFGHIJKLMN8PQABCD
FGHIJKLMN8PQRSTUVWXYZ0123456789 =':>/+.)[<-$*]:& /(\ABCDEFGHIJKLMN8PQRSTUVWXYZ0123456789 =':>/+.)[<-$*]:& /.(\ABCDEFGHIJKLMN8PQRBCDE
GHIJKLMN8PQRSTUVWXYZ0123456789 =':>/+.)[<-$*]:& /(\ABCDEFGHIJKLMN8PQRSTUVWXYZ0123456789 =':>/+.)[<-$*]:& /.(\ABCDEFGHIJKLMN8PQRSCDEF
HIJKLMN8PQRSTUVWXYZ0123456789 =':>/+.)[<-$*]:& /(\ABCDEFGHIJKLMN8PQRSTUVWXYZ0123456789 =':>/+.)[<-$*]:& /.(\ABCDEFGHIJKLMN8PQRSTDEFG
IJKLMN8PQRSTUVWXYZ0123456789 =':>/+.)[<-$*]:& /(\ABCDEFGHIJKLMN8PQRSTUVWXYZ0123456789 =':>/+.)[<-$*]:& /.(\ABCDEFGHIJKLMN8PQABCDEFGH
JKLMN8PQRSTUVWXYZ0123456789 =':>/+.)[<-$*]:& /(\ABCDEFGHIJKLMN8PQRSTUVWXYZ0123456789 =':>/+.)[<-$*]:& /.(\ABCDEFGHIJKLMN8PQRBCDEFGHI
KLMN8PQRSTUVWXYZ0123456789 =':>/+.)[<-$*]:& /(\ABCDEFGHIJKLMN8PQRSTUVWXYZ0123456789 =':>/+.)[<-$*]:& /.(\ABCDEFGHIJKLMN8PQRSCDEFGHIJ
LMN8PQRSTUVWXYZ0123456789 =':>/+.)[<-$*]:& /(\ABCDEFGHIJKLMN8PQRSTUVWXYZ0123456789 =':>/+.)[<-$*]:& /.(\ABCDEFGHIJKLMN8PQRSTDEFGHIJK
MN8PQRSTUVWXYZ0123456789 =':>/+.)[<-$*]:& /(\ABCDEFGHIJKLMN8PQRSTUVWXYZ0123456789 =':>/+.)[<-$*]:& /.(\ABCDEFGHIJKLMN8PQABCDEFGHIJKL
N8PQRSTUVWXYZ0123456789 =':>/+.)[<-$*]:& /(\ABCDEFGHIJKLMN8PQRSTUVWXYZ0123456789 =':>/+.)[<-$*]:& /.(\ABCDEFGHIJKLMN8PQRBCDEFGHIJKLM
8PQRSTUVWXYZ0123456789 =':>/+.)[<-$*]:& /(\ABCDEFGHIJKLMN8PQRSTUVWXYZ0123456789 =':>/+.)[<-$*]:& /.(\ABCDEFGHIJKLMN8PQRSCDEFGHIJKLMN
PQRSTUVWXYZ0123456789 =':>/+.)[<-$*]:& /(\ABCDEFGHIJKLMN8PQRSTUVWXYZ0123456789 =':>/+.)[<-$*]:& /.(\ABCDEFGHIJKLMN8PQRSTDEFGHIJKLMN8
QRSTUVWXYZ0123456789 =':>/+.)[<-$*]:& /(\ABCDEFGHIJKLMN8PQRSTUVWXYZ0123456789 =':>/+.)[<-$*]:& /.(\ABCDEFGHIJKLMN8PQABCDEFGHIJKLMN8P
RSTUVWXYZ0123456789 =':>/+.)[<-$*]:& /(\ABCDEFGHIJKLMN8PQRSTUVWXYZ0123456789 =':>/+.)[<-$*]:& /.(\ABCDEFGHIJKLMN8PQRBCDEFGHIJKLMN8PQ
STUVWXYZ0123456789 =':>/+.)[<-$*]:& /(\ABCDEFGHIJKLMN8PQRSTUVWXYZ0123456789 =':>/+.)[<-$*]:& /.(\ABCDEFGHIJKLMN8PQRSCDEFGHIJKLMN8PQR
TUVWXYZ0123456789 =':>/+.)[<-$*]:& /(\ABCDEFGHIJKLMN8PQRSTUVWXYZ0123456789 =':>/+.)[<-$*]:& /.(\ABCDEFGHIJKLMN8PQRSTDEFGHIJKLMN8PQRS
UVWXYZ0123456789 =':>/+.)[<-$*]:& /(\ABCDEFGHIJKLMN8PQRSTUVWXYZ0123456789 =':>/+.)[<-$*]:& /.(\ABCDEFGHIJKLMN8PQABCDEFGHIJKLMN8PQRST
VWXYZ0123456789 =':>/+.)[<-$*]:& /(\ABCDEFGHIJKLMN8PQRSTUVWXYZ0123456789 =':>/+.)[<-$*]:& /.(\ABCDEFGHIJKLMN8PQRBCDEFGHIJKLMN8PQRSTU
WXYZ0123456789 =':>/+.)[<-$*]:& /(\ABCDEFGHIJKLMN8PQRSTUVWXYZ0123456789 =':>/+.)[<-$*]:& /.(\ABCDEFGHIJKLMN8PQRSCDEFGHIJKLMN8PQRSTUV
XYZ0123456789 =':>/+.)[<-$*]:& /(\ABCDEFGHIJKLMN8PQRSTUVWXYZ0123456789 =':>/+.)[<-$*]:& /.(\ABCDEFGHIJKLMN8PQRSTDEFGHIJKLMN8PQRSTUVW
YZ0123456789 =':>/+.)[<-$*]:& /(\ABCDEFGHIJKLMN8PQRSTUVWXYZ0123456789 =':>/+.)[<-$*]:& /.(\ABCDEFGHIJKLMN8PQABCDEFGHIJKLMN8PQRSTUVWX
Z0123456789 =':>/+.)[<-$*]:& /(\ABCDEFGHIJKLMN8PQRSTUVWXYZ0123456789 =':>/+.)[<-$*]:& /.(\ABCDEFGHIJKLMN8PQRBCDEFGHIJKLMN8PQRSTUVWXY
0123456789 =':>/+.)[<-$*]:& /(\ABCDEFGHIJKLMN8PQRSTUVWXYZ0123456789 =':>/+.)[<-$*]:& /.(\ABCDEFGHIJKLMN8PQRSCDEFGHIJKLMN8PQRSTUVWXYZ
123456789 =':>/+.)[<-$*]:& /(\ABCDEFGHIJKLMN8PQRSTUVWXYZ0123456789 =':>/+.)[<-$*]:& /.(\ABCDEFGHIJKLMN8PQRSTDEFGHIJKLMN8PQRSTUVWXYZ0
23456789 =':>/+.)[<-$*]:& /(\ABCDEFGHIJKLMN8PQRSTUVWXYZ0123456789 =':>/+.)[<-$*]:& /.(\ABCDEFGHIJKLMN8PQABCDEFGHIJKLMN8PQRSTUVWXYZ01
3456789 =':>/+.)[<-$*]:& /(\ABCDEFGHIJKLMN8PQRSTUVWXYZ0123456789 =':>/+.)[<-$*]:& /.(\ABCDEFGHIJKLMN8PQRBCDEFGHIJKLMN8PQRSTUVWXYZ012
456789 =':>/+.)[<-$*]:& /(\ABCDEFGHIJKLMN8PQRSTUVWXYZ0123456789 =':>/+.)[<-$*]:& /.(\ABCDEFGHIJKLMN8PQRSCDEFGHIJKLMN8PQRSTUVWXYZ0123
56789 =':>/+.)[<-$*]:& /(\ABCDEFGHIJKLMN8PQRSTUVWXYZ0123456789 =':>/+.)[<-$*]:& /.(\ABCDEFGHIJKLMN8PQRSTDEFGHIJKLMN8PQRSTUVWXYZ01234
6789 =':>/+.)[<-$*]:& /(\ABCDEFGHIJKLMN8PQRSTUVWXYZ0123456789 =':>/+.)[<-$*]:& /.(\ABCDEFGHIJKLMN8PQABCDEFGHIJKLMN8PQRSTUVWXYZ012345
789 =':>/+.)[<-$*]:& /(\ABCDEFGHIJKLMN8PQRSTUVWXYZ0123456789 =':>/+.)[<-$*]:& /.(\ABCDEFGHIJKLMN8PQRBCDEFGHIJKLMN8PQRSTUVWXYZ0123456
89 =':>/+.)[<-$*]:& /(\ABCDEFGHIJKLMN8PQRSTUVWXYZ0123456789 =':>/+.)[<-$*]:& /.(\ABCDEFGHIJKLMN8PQRSCDEFGHIJKLMN8PQRSTUVWXYZ01234567
9 =':>/+.)[<-$*]:& /(\ABCDEFGHIJKLMN8PQRSTUVWXYZ0123456789 =':>/+.)[<-$*]:& /.(\ABCDEFGHIJKLMN8PQRSTDEFGHIJKLMN8PQRSTUVWXYZ012345678
 =':>/+.)[<-$*]:& /(\ABCDEFGHIJKLMN8PQRSTUVWXYZ0123456789 =':>/+.)[<-$*]:& /.(\ABCDEFGHIJKLMN8PQABCDEFGHIJKLMN8PQRSTUVWXYZ0123456789
=':>/+.)[<-$*]:& /(\ABCDEFGHIJKLMN8PQRSTUVWXYZ0123456789 =':>/+.)[<-$*]:& /.(\ABCDEFGHIJKLMN8PQRBCDEFGHIJKLMN8PQRSTUVWXYZ0123456789
':>/+.)[<-$*]:& /(\ABCDEFGHIJKLMN8PQRSTUVWXYZ0123456789 =':>/+.)[<-$*]:& /.(\ABCDEFGHIJKLMN8PQRSCDEFGHIJKLMN8PQRSTUVWXYZ0123456789 =
:>/+.)[<-$*]:& /(\ABCDEFGHIJKLMN8PQRSTUVWXYZ0123456789 =':>/+.)[<-$*]:& /.(\ABCDEFGHIJKLMN8PQRSTDEFGHIJKLMN8PQRSTUVWXYZ0123456789 =':
>/+.)[<-$*]:& /(\ABCDEFGHIJKLMN8PQRSTUVWXYZ0123456789 =':>/+.)[<-$*]:& /.(\ABCDEFGHIJKLMN8PQABCDEFGHIJKLMN8PQRSTUVWXYZ0123456789 =':
/+.)[<-$*]:& /(\ABCDEFGHIJKLMN8PQRSTUVWXYZ0123456789 =':>/+.)[<-$*]:& /.(\ABCDEFGHIJKLMN8PQRBCDEFGHIJKLMN8PQRSTUVWXYZ0123456789 =':>
+.)[<-$*]:& /(\ABCDEFGHIJKLMN8PQRSTUVWXYZ0123456789 =':>/+.)[<-$*]:& /.(\ABCDEFGHIJKLMN8PQRSCDEFGHIJKLMN8PQRSTUVWXYZ0123456789 =':>/
.)[<-$*]:& /(\ABCDEFGHIJKLMN8PQRSTUVWXYZ0123456789 =':>/+.)[<-$*]:& /.(\ABCDEFGHIJKLMN8PQRSTDEFGHIJKLMN8PQRSTUVWXYZ0123456789 =':>/+
)[<-$*]:& /(\ABCDEFGHIJKLMN8PQRSTUVWXYZ0123456789 =':>/+.)[<-$*]:& /.(\ABCDEFGHIJKLMN8PQABCDEFGHIJKLMN8PQRSTUVWXYZ0123456789 =':>/+.
```

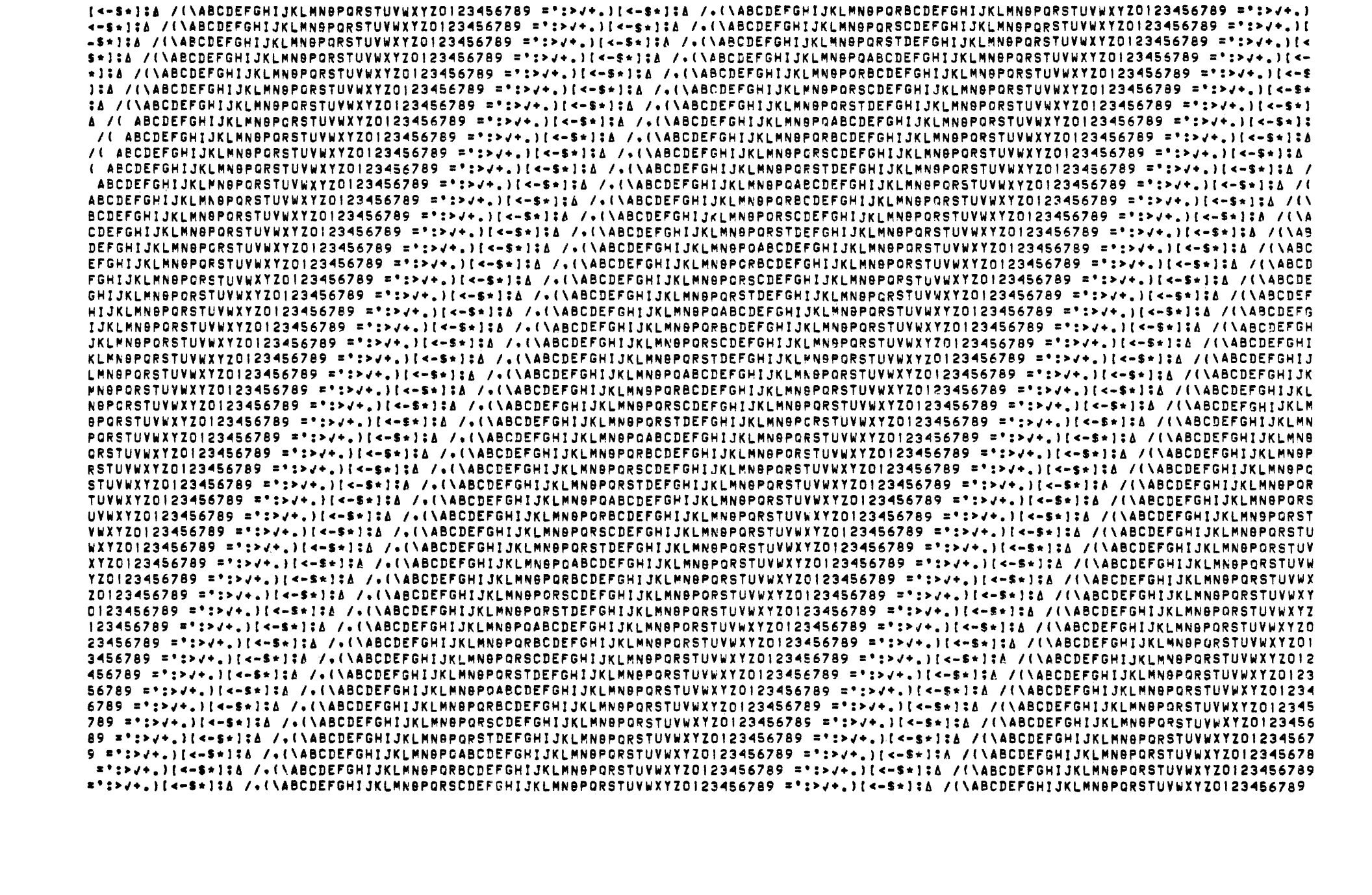

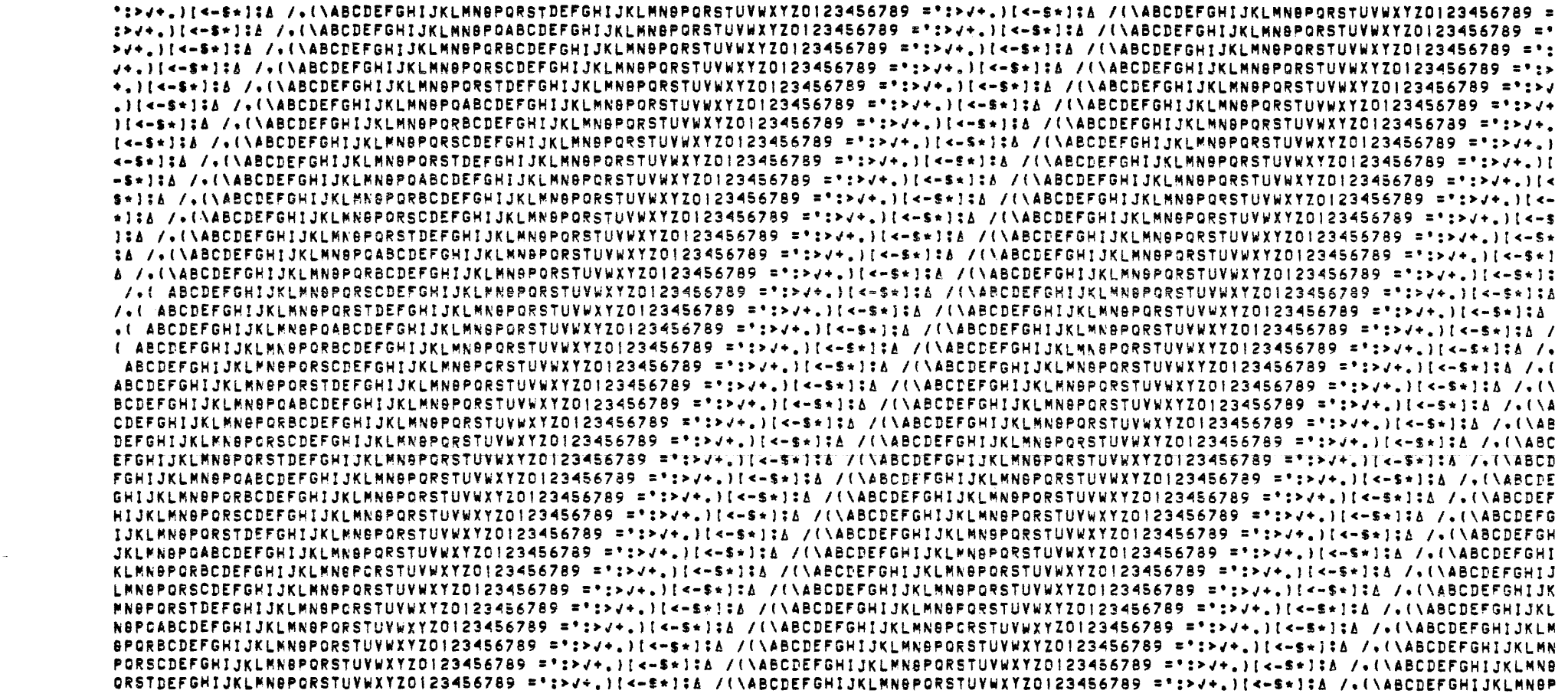

```
*       THE FOLLOWING TEST WILL PRINT A GROUP OF LINES WITH AND WITHOUT TAB/BACKSPACE CONTROL.  AFTER THE FIRST GROUP HAS BEEN
*   PRINTED A HALT WILL OCCUR AND THE POSITION OF THE CONSOLE TAB/BACKSPACE SWITCH SHOULD BE REVERSED.  THEN CLEAR THE HALT
```

```
THIS IS A TEST OF THE TAB AND BACKSPACE FEATURE OF THE SDS LINE PRINTER.
THIS IS A TEST OF THE TAB AND BACKSPACE FEATURE OF THE SDS LINE PRINTER.
THIS IS A TEST OF THE TAB AND BACKSPACE FEATURE OF THE SDS LINE PRINTER.
THIS IS A TEST OF THE TAB AND BACKSPACE FEATURE OF THE SDS LINE PRINTER.
THIS IS A TEST OF THE TAB AND BACKSPACE FEATURE OF THE SDS LINE PRINTER.
```

```
OACE FEATURE OF THE SDS LINE PRINTER.   STAB AND BACKSP )THIS IS A TEST OF THE
OACE FEATURE OF THE SDS LINE PRINTER.   STAB AND BACKSP )THIS IS A TEST OF THE
OACE FEATURE OF THE SDS LINE PRINTER.   STAB AND BACKSP )THIS IS A TEST OF THE
OACE FEATURE OF THE SDS LINE PRINTER.   STAB AND BACKSP )THIS IS A TEST OF THE
OACE FEATURE OF THE SDS LINE PRINTER.   STAB AND BACKSP )THIS IS A TEST OF THE
```

```
*       THE FOLLOWING TEST WILL SLEW 1 PAGE.
```

* THE FOLLOWING TEST WILL CHECK VERTICAL AND HORIZONTAL CONTROL.

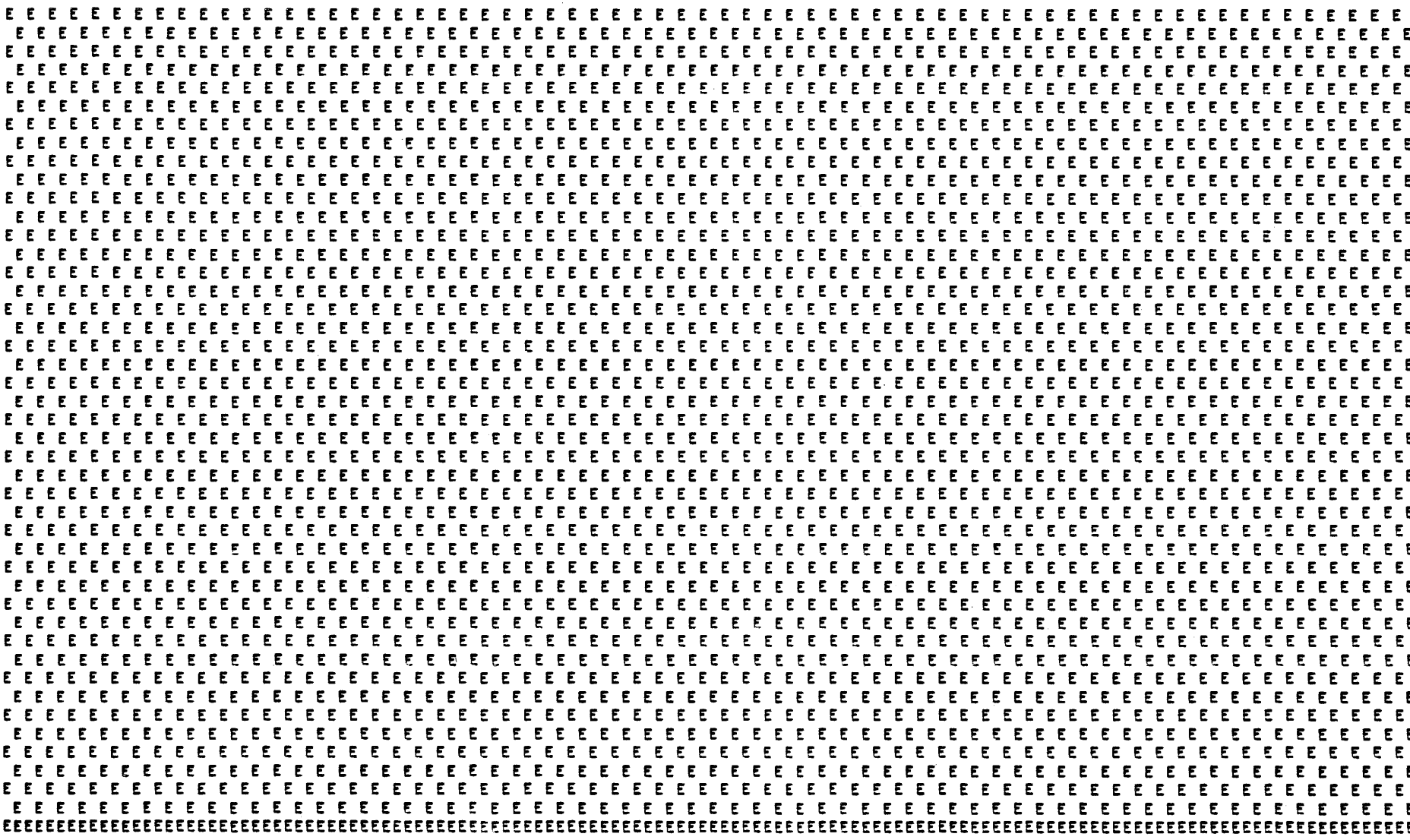

```
*
* LINE PRINTER TESTER          R WILBORN      4-1-63
*
00200  0 00 00000  MC00   HLT
00201  0 40 10060         PRTW                    PRINTER READY TEST
00202  0 01 00201         BRU     *-1
00203  0 02 10060         SLPW                    SKIP LINE
00204  0 13 00635         POT     4LNE
00205  0 71 00631         LDX     M56
00206  0 02 42660  MC02   PLPW                    PRINT LINE
00207  0 13 00657         POT     OMSG
00210  0 40 21000         BRTW
00211  0 01 00210         BRU     *-1
00212  0 41 00206         BRX     MC02
00213  0 02 10060         SLPW                    SKIP LINE
00214  0 13 00635         POT     4LNE
00215  0 46 30003  MC04   CLR
00216  0 35 00475         STA     CT90            SET COUNT TO ZERO
00217  0 40 20400         BPT     1               CHAR PRINT WANTED
00220  0 01 00302         BRU     MC20            NO
00221  0 71 00630         LDX     M4              SET OUTPUT CELLS
00222  2 76 00653         LDA     OUTPTA&4,2
00223  2 35 00657         STA     OUTPT1&4,2
00224  0 41 00222         BRX     *-2
00225  0 71 00631         LDX     M56
00226  0 02 42660  MC04M  PLPW                    PRINT CHAR TEST TITLE
00227  0 13 00663         POT     OMSG4
00230  0 40 21000         BRTW
00231  0 01 00230         BRU     *-1
00232  0 41 00226         BRX     MC04M
00233  0 02 10060         SLPW                    SKIP LINE
00234  0 13 00636         POT     5LNE
00235  0 76 00623         LDA     C5              ADVANCE LINE COUNTER
00236  0 55 00475         ADD     CT90
00237  0 35 00475         STA     CT90
00240  0 76 00627         LDA     C131
00241  0 35 00633         STA     COUNT1
00242  0 76 00646  MC04R  LDA     OUTPUT          SET INTERLACE POT
00243  0 35 00250         STA     MC05&1
00244  0 76 00621         LDA     C3              SET COUNTER
00245  0 35 00671         STA     TEMP&1
00246  0 71 00631         LDX     M56
00247  0 02 42660  MC05   PLPW                    OUTPUT LINE OF DATA
00250  0 00 00000         PZE     **              POT SET AT START
00251  0 40 21000         BRTW
00252  0 01 00251         BRU     *-1
00253  0 41 00247         BRX     MC05
00254  0 02 10060         SLPW                    SKIP A LINE
00255  0 13 00634         POT     1LNE
00256  0 43 00460         BRM     CT00            LINE COUNT
```

```
00257  1 00 00633          REDUCE  COUNT1          DONE WITH 132 LINES
00260  0 01 00272          BRU     MC10            NO
00261  0 76 00626          LDA     C66             YES
00262  0 54 00475          SUB     CT90
00263  0 35 00645          STA     XLNE
00264  0 40 10060          PRTW                    PRINTER READY TEST
00265  0 01 00264          BRU     *-1
00266  0 43 00476          BRM     KLUGE
00267  0 02 10060          SLPW                    SKIP A LINE
00270  0 13 00645          POT     XLNE
00271  0 01 00302          BRU     MC20
00272  0 61 00250  MC10    MIN     MC05&1
00273  1 00 00671          REDUCE  TEMP&1           DONE 4 LOOPS
00274  0 01 00246          BRU     MC05-1          NO
00275  0 61 00653          MIN     OUTPT1          YES
00276  0 61 00654          MIN     OUTPT2
00277  0 61 00655          MIN     OUTPT3
00300  0 61 00656          MIN     OUTPT4
00301  0 01 00242          BRU     MC04R
00302  0 40 20200  MC20    BPT     2               BACKSPACE/TAB TEST
00303  0 01 00366          BRU     MC40            NO
00304  0 40 10060          PRTW                    PRINTER READY TEST
00305  0 01 00304          BRU     *-1
00306  0 43 00476          BRM     KLUGE
00307  0 02 10060          SLPW                    SKIP A LINE
00310  0 13 00640          POT     10LNE
00311  0 71 00631          LDX     M56
00312  0 02 42660  MC22    PLPW
00313  0 13 00660          POT     OMSG1
00314  0 40 21000          BRTW
00315  0 01 00314          BRU     *-1
00316  0 41 00312          BRX     MC22
00317  0 02 10060          SLPW                    SKIP LINE
00320  0 13 00634          POT     1LNE
00321  0 71 00631          LDX     M56
00322  0 02 42660  MC24    PLPW
00323  0 13 00661          POT     OMSG2
00324  0 40 21000          BRTW
00325  0 01 00324          BRU     *-1
00326  0 41 00322          BRX     MC24
00327  0 02 10060          SLPW                    SKIP LINE
00330  0 13 00641          POT     11LNE
00331  0 76 00620          LDA     C1
00332  0 35 00670          STA     TEMP            MAJOR LOOP
00333  0 76 00622  MC24M   LDA     C4
00334  0 35 00671          STA     TEMP&1          MINOR LOOP
00335  0 71 00631          LDX     M56
00336  0 02 42660  MC25    PLPW
00337  0 13 00662          POT     OMSG3
00340  0 40 21000          BRTW
```

```
00341  0 01 00340          BRU     *-1
00342  0 41 00336          BRX     MC25
00343  0 02 10060          SLPW                    SKIP LINE
00344  0 13 00634          POT     1LNE
00345  1 00 00671          REDUCE  TEMP&1          DONE WITH MINOR LOOP
00346  0 01 00335          BRU     MC25-1          NO
00347  1 00 00670          REDUCE  TEMP            DONE WITH MAJOR LOOP
00350  0 01 00352          BRU     *&2
00351  0 01 00361          BRU     MC27            YES
00352  0 40 10060          PRTW                    PRINTER READY TEST
00353  0 01 00352          BRU     *-1
00354  0 43 00476          BRM     KLUGE
00355  0 02 10060          SLPW                    SKIP LINE
00356  0 13 00636          POT     5LNE
00357  0 00 00000          HLT
00360  0 01 00333          BRU     MC24M
00361  0 40 10060  MC27    PRTW                    PRINTER READY TEST
00362  0 01 00361          BRU     *-1
00363  0 43 00476          BRM     KLUGE
00364  0 02 10060          SLPW                    STEP A LINE
00365  0 13 00643          POT     29LNE
00366  0 40 20100  MC40    BPT     3               IS A SLEW TEST WANTED
00367  0 01 00400          BRU     MC50
00370  0 71 00631          LDX     M56
00371  0 02 42660  MC42    PLPW                    PRINT SLEW TEST MSG
00372  0 13 00664          POT     OMSG5
00373  0 40 21000          BRTW
00374  0 01 00373          BRU     *-1
00375  0 41 00371          BRX     MC42
00376  0 02 10060          SLPW                    SKIP LINE
00377  0 13 00644          POT     66LNE
00400  0 40 20040  MC50    BPT     4
00401  0 01 00215          BRU     MC04
00402  0 71 00631          LDX     M56
00403  0 02 42660  MC51    PLPW                    PRINT THE TITLE
00404  0 13 00667          POT     OMSG8
00405  0 40 21000          BRTW
00406  0 01 00405          BRU     *-1
00407  0 41 00403          BRX     MC51
00410  0 02 10060          SLPW
00411  0 13 00636          POT     5LNE
00412  0 76 00624          LDA     C21
00413  0 35 00670          STA     TEMP
00414  0 71 00631          LDX     M56
00415  0 02 42660  MC52    PLPW
00416  0 13 00665          POT     OMSG6
00417  0 40 21000          BRTW
00420  0 01 00417          BRU     *-1
00421  0 41 00415          BRX     MC52
00422  0 02 10060          SLPW
```

```
00423  0 13 00634          POT     1LNE
00424  0 71 00631          LDX     M56
00425  0 02 42660  MC55    PLPW
00426  0 13 00666          POT     OMSG7
00427  0 40 21000          BRTW
00430  0 01 00427          BRU     *-1
00431  0 41 00425          BRX     MC55
00432  0 02 10060          SLPW
00433  0 13 00634          POT     1LNE
00434  1 00 00670          REDUCE  TEMP
00435  0 01 00414          BRU     MC52-1
00436  0 71 00631          LDX     M56
00437  0 02 42660  MC56    PLPW
00440  0 13 00665          POT     OMSG6
00441  0 40 21000          BRTW
00442  0 01 00441          BRU     *-1
00443  0 41 00437          BRX     MC56
00444  0 71 00631          LDX     M56
00445  0 02 42660  MC57    PLPW
00446  0 13 00666          POT     OMSG7
00447  0 40 21000          BRTW
00450  0 01 00447          BRU     *-1
00451  0 41 00445          BRX     MC57
00452  0 02 10060          SLPW
00453  0 13 00634          POT     1LNE
00454  0 43 00476          BRM     KLUGE
00455  0 02 10060          SLPW
00456  0 13 00642          POT     16LNE
00457  0 01 00215          BRU     MC04
```

```
                                PAGE
*
* S/R TO COUNT THE NUMBER OF LINES PRINTED.
*
00460   0 00 00000  CT00    PZE     **
00461   0 61 00475          MIN     CT90
00462   0 76 00475          LDA     CT90
00463   1 01 00625          EQUAL   C50
00464   0 51 00460          BRR     CT00          NOT A FULL PAGE
00465   0 40 10060          PRTW                  PRINTER READY TEST
00466   0 01 00465          BRU     *-1
00467   0 43 00476          BRM     KLUGE
00470   0 02 10060          EOM     10060         SLEW 16 LINES
00471   0 13 00642          POT     16LNE
00472   0 46 30003          CLR
00473   0 35 00475          STA     CT90          PAGE COUNT TO ZERO
00474   0 51 00460          BRR     CT00
00475   0 00 00000  CT90    PZE     **            PRINTED LINE COUNT
00476   0 00 00000  KLUGE   PZE
00477   0 02 42660          EOM     42660
00500   0 13 00504          POT     KLUGE1
00501   0 40 21000          BRTW
00502   0 01 00501          BRU     *-1
00503   0 51 00476          BRR     KLUGE
00504   00040600    KLUGE1  OCT     40600
            00600   KLUGE2  BOOL    600
            00600           ORG     KLUGE2
00600   60606060            OCT     60606060
                    REDUCE  OPD     10000000
00601   06040000            OCT     06040000
00602   0 20 00000          NOP
00603   0 53 40000          SKN*    0
00604   0 51 00000          BRR     0
00605   0 61 00000          MIN     0
00606   0 51 00000          BRR     0
                    EQUAL   OPD     10100000
00607   0 36 00616          STB     EQUAL1
00610   0 75 00632          LDB     0M23
00611   0 70 40000          SKM*    0
00612   0 01 00614          BRU     *&2
00613   0 61 00000          MIN     0
00614   0 75 00616          LDB     EQUAL1
00615   0 51 00000          BRR     0
00616   0 00 00000  EQUAL1  PZE     **
```

```
                                PAGE
*
* PROGRAM CONSTANTS AND PARAMETERS
*
                        PLPW    OPD     ØØ242660
                        PRTW    OPD     Ø4Ø1ØØ6Ø
                        SLPW    OPD     ØØ21ØØ6Ø
ØØ617  ØØØØØØØØ        CØ      DEC     Ø
ØØ62Ø  ØØØØØØØ1        C1      DEC     1
ØØ621  ØØØØØØØ3        C3      DEC     3
ØØ622  ØØØØØØØ4        C4      DEC     4
ØØ623  ØØØØØØØ5        C5      DEC     5
ØØ624  ØØØØØØ25        C21     DEC     21
ØØ625  ØØØØØØ62        C5Ø     DEC     5Ø
ØØ626  ØØØØØ1Ø2        C66     DEC     66
ØØ627  ØØØØØ2Ø3        C131    DEC     131
ØØ63Ø  77777774        M4      DEC     -4
ØØ631  77777710        M56     DEC     -56
ØØ632  77777777        ØM23    OCT     77777777
ØØ633  Ø ØØ ØØØØØ      COUNT1  PZE     **      132 LINE COUNT
ØØ634  ØØØØØØØ1        1LNE    DEC     1       1 LINE SPACE
ØØ635  ØØØØØØØ4        4LNE    DEC     4       4 LINE SPACES
ØØ636  ØØØØØØØ5        5LNE    DEC     5       5 LINE SPACES
ØØ637  ØØØØØØ1Ø        8LNE    DEC     8       8 LINE SPACES
ØØ64Ø  ØØØØØØ12        1ØLNE   DEC     1Ø      1Ø LINE SPACES
ØØ641  ØØØØØØ13        11LNE   DEC     11      11 LINE SPACES
ØØ642  ØØØØØØ2Ø        16LNE   DEC     16      16 LINE SPACES
ØØ643  ØØØØØØ35        29LNE   DEC     29      29 LINE SPACES
ØØ644  ØØØØ1Ø2         66LNE   DEC     66      SLEW 66 LINES
ØØ645  Ø ØØ ØØØØØ      XLNE    PZE     **      N LINE SPACES
ØØ646  Ø 13 ØØ653      OUTPUT  POT     OUTPT1
ØØ647  Ø2Ø41ØØØ        OUTPTA  OCT     2Ø41ØØØ
ØØ65Ø  Ø2Ø412ØØ        OUTPTB  OCT     2Ø412ØØ
ØØ651  Ø2Ø414ØØ        OUTPTC  OCT     2Ø414ØØ
ØØ652  Ø2Ø416ØØ        OUTPTD  OCT     2Ø416ØØ
ØØ653  Ø ØØ ØØØØØ      OUTPT1  PZE     **
ØØ654  Ø ØØ ØØØØØ      OUTPT2  PZE     **
ØØ655  Ø ØØ ØØØØØ      OUTPT3  PZE     **
ØØ656  Ø ØØ ØØØØØ      OUTPT4  PZE     **
ØØ657  Ø1242ØØØ        OMSG    OCT     1242ØØØ
ØØ66Ø  Ø2Ø421ØØ        OMSG1   OCT     2Ø421ØØ
ØØ661  Ø2Ø42141        OMSG2   OCT     2Ø42141
ØØ662  Ø12Ø23ØØ        OMSG3   OCT     12Ø23ØØ
ØØ663  Ø11Ø24ØØ        OMSG4   OCT     11Ø24ØØ
ØØ664  ØØ5425ØØ        OMSG5   OCT     5425ØØ
ØØ665  Ø2Ø426ØØ        OMSG6   OCT     2Ø426ØØ
ØØ666  Ø2Ø427ØØ        OMSG7   OCT     2Ø427ØØ
ØØ667  Ø11Ø275Ø        OMSG8   OCT     11Ø275Ø
ØØ67Ø       ØØØ12      TEMP    BSS     1Ø
            ØØ1ØØ              ORG     64
```

```
ØØ1ØØ  Ø Ø1 ØØ6Ø1          BRU     REDUCE
ØØ1Ø1  Ø Ø1 ØØ6Ø7          BRU     EQUAL
                Ø1ØØØ       ORG     512                    OCTAL 1ØØØ
Ø1ØØØ  21222324     PRINT1  BCI     9,ABCDEFGHIJKLMNOPQRSTUVWXYZØ123456789
Ø1Ø11  12131415             OCT     12131415
Ø1Ø12  16172Ø33             OCT     16172Ø33
Ø1Ø13  34353640             OCT     34353640
Ø1Ø14  53545556             OCT     53545556
Ø1Ø15  57606174             OCT     57606174
Ø1Ø16  76212223             OCT     76212223
Ø1Ø17  24252627             BCI     8,DEFGHIJKLMNOPQRSTUVWXYZØ12345678
Ø1Ø27  11121314             OCT     11121314
Ø1Ø3Ø  15161720             OCT     15161720
Ø1Ø31  33343536             OCT     33343536
Ø1Ø32  40535455             OCT     40535455
Ø1Ø33  56576061             OCT     56576061
Ø1Ø34  73747621             OCT     73747621
Ø1Ø35  22232425             BCI     4,BCDEFGHIJKLMNOPQ
Ø1Ø41  21222324             BCI     9,ABCDEFGHIJKLMNOPQRSTUVWXYZØ123456789
Ø1Ø52  12131415             OCT     12131415
Ø1Ø53  16172Ø33             OCT     16172Ø33
Ø1Ø54  34353640             OCT     34353640
Ø1Ø55  53545556             OCT     53545556
Ø1Ø56  57606174             OCT     57606174
Ø1Ø57  76212223             OCT     76212223
Ø1Ø6Ø  24252627             BCI     8,DEFGHIJKLMNOPQRSTUVWXYZØ12345678
Ø1Ø7Ø  11121314             OCT     11121314
Ø1Ø71  15161720             OCT     15161720
Ø1Ø72  33343536             OCT     33343536
Ø1Ø73  40535455             OCT     40535455
Ø1Ø74  56576061             OCT     56576061
Ø1Ø75  73747621             OCT     73747621
Ø1Ø76  22232425             BCI     4,BCDEFGHIJKLMNOPQ
                Ø12ØØ       ORG     64Ø                    OCTAL 12ØØ
Ø12ØØ  22232425     PRINT2  BCI     9,BCDEFGHIJKLMNOPQRSTUVWXYZØ123456789
Ø121Ø  13141516             OCT     13141516
Ø1212  172Ø3334             OCT     172Ø3334
Ø1213  35364Ø53             OCT     35364Ø53
Ø1214  54555657             OCT     54555657
Ø1215  60617476             OCT     60617476
Ø1216  21222324             BCI     9,ABCDEFGHIJKLMNOPQRSTUVWXYZØ123456789
Ø1227  12131415             OCT     12131415
Ø123Ø  16172Ø33             OCT     16172Ø33
Ø1231  34353640             OCT     34353640
Ø1232  53545556             OCT     53545556
Ø1233  57606173             OCT     57606173
Ø1234  74762122             OCT     74762122
Ø1235  23242526             BCI     4,CDEFGHIJKLMNOPQR
Ø1241  22232425             BCI     9,BCDEFGHIJKLMNOPQRSTUVWXYZØ123456789
Ø1252  13141516             OCT     13141516
```

```
Ø1253  17ØØ3334           OCT     17ØØ3334
Ø1254  35364ØØ53           OCT     35364ØØ53
Ø1255  54555657           OCT     54555657
Ø1256  6ØØ617476           OCT     6ØØ617476
Ø1257  21222324           BCI     9,ABCDEFGHIJKLMNOPQRSTUVWXYZØ123456789
Ø127Ø  12131415           OCT     12131415
Ø1271  16172ØØ33           OCT     16172ØØ33
Ø1272  34353640           OCT     34353640
Ø1273  53545556           OCT     53545556
Ø1274  57ØØ6173           OCT     57ØØ6173
Ø1275  74762122           OCT     74762122
Ø1276  23242526           BCI     4,CDEFGHIJKLMNOPQR
            Ø14ØØ           ORG     768                     OCTAL 14ØØ
Ø14ØØ  23242526    PRINT3 BCI     9,CDEFGHIJKLMNOPQRSTUVWXYZØ123456789 #
Ø1411  14151617           OCT     14151617
Ø1412  2ØØ333435           OCT     2ØØ333435
Ø1413  364Ø5354           OCT     364Ø5354
Ø1414  55565760           OCT     5556576Ø
Ø1415  61747621           OCT     61747621
Ø1416  22232425           BCI     9,BCDEFGHIJKLMNOPQRSTUVWXYZØ123456789
Ø1427  13141516           OCT     13141516
Ø143Ø  17ØØ3334           OCT     17ØØ3334
Ø1431  35364ØØ53           OCT     35364ØØ53
Ø1432  54555657           OCT     54555657
Ø1433  6ØØ617374           OCT     6ØØ617374
Ø1434  76212223           OCT     76212223
Ø1435  24252627           BCI     4,DEFGHIJKLMNOPQRS
Ø1441  23242526           BCI     9,CDEFGHIJKLMNOPQRSTUVWXYZØ123456789 #
Ø1452  14151617           OCT     14151617
Ø1453  2ØØ333435           OCT     2ØØ333435
Ø1454  364Ø5354           OCT     364Ø5354
Ø1455  55565760           OCT     5556576Ø
Ø1456  61747621           OCT     61747621
Ø1457  22232425           BCI     9,BCDEFGHIJKLMNOPQRSTUVWXYZØ123456789
Ø147Ø  13141516           OCT     13141516
Ø1471  17ØØ3334           OCT     17ØØ3334
Ø1472  35364ØØ53           OCT     35364ØØ53
Ø1473  54555657           OCT     54555657
Ø1474  6ØØ617374           OCT     6ØØ617374
Ø1475  76212223           OCT     76212223
Ø1476  24252627           BCI     4,DEFGHIJKLMNOPQRS
            Ø16ØØ           ORG     896                     OCTAL 16ØØ
Ø16ØØ  24252627    PRINT4 BCI     9,DEFGHIJKLMNOPQRSTUVWXYZØ123456789 #@
Ø1611  15161720           OCT     15161720
Ø1612  33343536           OCT     33343536
Ø1613  4ØØ535455           OCT     4ØØ535455
Ø1614  56576ØØ61           OCT     56576ØØ61
Ø1615  74762122           OCT     74762122
Ø1616  23242526           BCI     9,CDEFGHIJKLMNOPQRSTUVWXYZØ123456789 #
Ø1627  14151617           OCT     14151617
```

```
01630  20333435          OCT     20333435
01631  36405354          OCT     36405354
01632  55565760          OCT     55565760
01633  61737476          OCT     61737476
01634  21222324          BCI     5,ABCDEFGHIJKLMNOPQRST
01641  24252627          BCI     9,DEFGHIJKLMNOPQRSTUVWXYZ0123456789 #@
01652  15161720          OCT     15161720
01653  33343536          OCT     33343536
01654  40535455          OCT     40535455
01655  56576061          OCT     56576061
01656  74762122          OCT     74762122
01657  23242526          BCI     9,CDEFGHIJKLMNOPQRSTUVWXYZ0123456789 #
01670  14151617          OCT     14151617
01671  20333435          OCT     20333435
01672  36405354          OCT     36405354
01673  55565760          OCT     55565760
01674  61737476          OCT     61737476
01675  21222324          BCI     5,ABCDEFGHIJKLMNOPQRST
            02000        ORG     1024
02000  54121212  MSG     BCI     13,*
02015  54541262          BCI     8,** SDS ON-LINE PRINTER TESTER **
            02100        ORG     1088                OCTAL 2100
02100  54121212  MSG1    BCI     11,*       THE FOLLOWING TEST WILL PRINT
                 A GROU
02113  47124626          BCI     11,P OF LINES WITH AND WITHOUT TAB/BACKSP
                 ACE CO
02126  45635146          BCI     11,NTROL.  AFTER THE FIRST GROUP HAS BEEN
02141  54121212  MSG2    BCI     11,*   PRINTED A HALT WILL OCCUR AND THE
                 POSITI
02154  46451246          BCI     11,ON OF THE CONSOLE TAB/BACKSPACE SWITCH
                  SHOUL
02167  24122225          BCI     11,D BE REVERSED.  THEN CLEAR THE HALT
            02300        ORG     1216                OCTAL 2300
02300  72002123  MSG3    OCT     72002123
02301  25122625          BCI     9,E FEATURE OF THE SDS LINE PRINTER.
02312  32626321          OCT     32626321
02313  22122145          BCI     3,B AND BACKSP
02316  32346330          OCT     32346330
02317  31621231          BCI     5,IS IS A TEST OF THE
            02400        ORG     1280                OCTAL 2400
02400  54121212  MSG4    BCI     9,*       THE FOLLOWING TEST WILL PRIN
02411  63122565          BCI     9,T EVERY CHARACTER IN EVERY POSITION.
            02500        ORG     1344                OCTAL 2500
02500  54121212  MSG5    BCI     11,*       THE FOLLOWING TEST WILL SLEW 1
                  PAGE.
            02600  XXX   BOOL    2600
            02600        ORG     XXX
02600  25122512  MSG6    BCI     11,E E E E E E E E E E E E E E E E E E E
                 E E E
```

```
Ø2613  25122512          BCI     11,E E E E E E E E E E E E E E E E E E E
                E E E
Ø2626  25122512          BCI     11,E E E E E E E E E E E E E E E E E E E
                E E E
       Ø27ØØ   XXXX      BOOL    27ØØ
       Ø27ØØ             ORG     XXXX
Ø27ØØ  12251225  MSG7    BCI     11, E E E E E E E E E E E E E E E E E E E
                 E E E
Ø2713  12251225          BCI     11, E E E E E E E E E E E E E E E E E E E
                E E E
Ø2726  12251225          BCI     11, E E E E E E E E E E E E E E E E E E E
                E E E
       Ø275Ø             ORG     1512                    OCTAL 275Ø
Ø275Ø  54121212  MSG8    BCI     11,*       THE FOLLOWING TEST WILL CHECK
                VERTIC
Ø2763  21431221          BCI     7,AL AND HORIZONTAL CONTROL.
       ØØ2ØØ             END     MCØØ
```

DONE PASS 2

IDENTIFICATION: Buffered Line Printer Test Program

AUTHOR: M. R. Mulholland, SDS

ACCEPTED: 22 May 1964

COMPUTER CONFIGURATION: Any SDS 910 or SDS 920 computer with an SDS buffered line printer.

PROGRAMMED OPERATORS: None

STORAGE: Locations 100_8 and 150_8-2336_8 (1144 locations).

TIMING: The printer is driven at both its normal rate (300 lines per minute) and its maximum rate (1080 lines per minute, or 120 lines per second, while slewing).

USE: The Buffered Line Printer Test Program is on a self-loading paper tape.

1. Load the program by the normal FILL procedure. When the program is loaded, the computer will halt.

2. The paper should be adjusted in the printer such that the perforation between sheets is directly over the hammers. After the initial setting, the program will maintain form control and the page will be restored after each test.

3. Select the functions to be tested before clearing the halt.

   BP 1 Reset: No action.
   Set: Each character is printed in every print position (Figure 1)

   BP 2 Reset: No action.
   Set: Vertical format channels and vertical spacing is tested (Figure 2)

USE: (Cont)

BP 3 Reset: No action.
Set: Vertical and horizontal control are checked by printing a checkerboard of E's (Figure 3).

BP 4 Reset: No action.
Set: Maximum speed is attained in printing by printing the same character in the left most 64 character positions on a line, with each successive line printing the character which lies at an interval of approximately one-third of the distance around the printing drum from the preceding character (Figure 4).

Testing will continue as long as the particular test is called for by the breakpoints being set. If all the breakpoints are reset, the program will loop until a test is called for. If the breakpoints are all reset (upon completion of any test), the printer will slew the paper to the top of the next page.

METHOD: Not applicable.

Figure 1

* ** SDS BUFFERED ON-LINE PRINTER TESTER **

 Catalog No. 064002B

* THE FOLLOWING TEST WILL PRINT EVERY CHARACTER IN EVERY POSITION.

```
 0123456789+-.*ABCDEFGHIJKLMNOPQRSTUVWXYZ='()/><:;$?][↓^\¤#*"  0123456789+-.*ABCDEFGHIJKLMNOPQRSTUVWXYZ='()/><:;$?][↓^\¤#*"  01
 0123456789+-.*ABCDEFGHIJKLMNOPQRSTUVWXYZ='()/><:;$?][↓^\¤#*"  0123456789+-.*ABCDEFGHIJKLMNOPQRSTUVWXYZ='()/><:;$?][↓^\¤#*"  012
0123456789+-.*ABCDEFGHIJKLMNOPQRSTUVWXYZ='()/><:;$?][↓^\¤#*"  0123456789+-.*ABCDEFGHIJKLMNOPQRSTUVWXYZ='()/><:;$?][↓^\¤#*"  0123
123456789+-.*ABCDEFGHIJKLMNOPQRSTUVWXYZ='()/><:;$?][↓^\¤#*"  0123456789+-.*ABCDEFGHIJKLMNOPQRSTUVWXYZ='()/><:;$?][↓^\¤#*"  01234
23456789+-.*ABCDEFGHIJKLMNOPQRSTUVWXYZ='()/><:;$?][↓^\¤#*"  0123456789+-.*ABCDEFGHIJKLMNOPQRSTUVWXYZ='()/><:;$?][↓^\¤#*"  012345
3456789+-.*ABCDEFGHIJKLMNOPQRSTUVWXYZ='()/><:;$?][↓^\¤#*"  0123456789+-.*ABCDEFGHIJKLMNOPQRSTUVWXYZ='()/><:;$?][↓^\¤#*"  0123456
456789+-.*ABCDEFGHIJKLMNOPQRSTUVWXYZ='()/><:;$?][↓^\¤#*"  0123456789+-.*ABCDEFGHIJKLMNOPQRSTUVWXYZ='()/><:;$?][↓^\¤#*"  01234557
56789+-.*ABCDEFGHIJKLMNOPQRSTUVWXYZ='()/><:;$?][↓^\¤#*"  0123456789+-.*ABCDEFGHIJKLMNOPQRSTUVWXYZ='()/><:;$?][↓^\¤#*"  012345678
6789+-.*ABCDEFGHIJKLMNOPQRSTUVWXYZ='()/><:;$?][↓^\¤#*"  0123456789+-.*ABCDEFGHIJKLMNOPQRSTUVWXYZ='()/><:;$?][↓^\¤#*"  0123456789
789+-.*ABCDEFGHIJKLMNOPQRSTUVWXYZ='()/><:;$?][↓^\¤#*"  0123456789+-.*ABCDEFGHIJKLMNOPQRSTUVWXYZ='()/><:;$?][↓^\¤#*"  0123456789+
89+-.*ABCDEFGHIJKLMNOPQRSTUVWXYZ='()/><:;$?][↓^\¤#*"  0123456789+-.*ABCDEFGHIJKLMNOPQRSTUVWXYZ='()/><:;$?][↓^\¤#*"  0123456789+-
9+-.*ABCDEFGHIJKLMNOPQRSTUVWXYZ='()/><:;$?][↓^\¤#*"  0123456789+-.*ABCDEFGHIJKLMNOPQRSTUVWXYZ='()/><:;$?][↓^\¤#*"  0123456789+-.
+-.*ABCDEFGHIJKLMNOPQRSTUVWXYZ='()/><:;$?][↓^\¤#*"  0123456789+-.*ABCDEFGHIJKLMNOPQRSTUVWXYZ='()/><:;$?][↓^\¤#*"  0123456789+-..
-.*ABCDEFGHIJKLMNOPQRSTUVWXYZ='()/><:;$?][↓^\¤#*"  0123456789+-.*ABCDEFGHIJKLMNOPQRSTUVWXYZ='()/><:;$?][↓^\¤#*"  0123456789+-..*
..*ABCDEFGHIJKLMNOPQRSTUVWXYZ='()/><:;$?][↓^\¤#*"  0123456789+-.*ABCDEFGHIJKLMNOPQRSTUVWXYZ='()/><:;$?][↓^\¤#*"  0123456789+-..*A
.*ABCDEFGHIJKLMNOPQRSTUVWXYZ='()/><:;$?][↓^\¤#*"  0123456789+-.*ABCDEFGHIJKLMNOPQRSTUVWXYZ='()/><:;$?][↓^\¤#*"  0123456789+-..*AB
*ABCDEFGHIJKLMNOPQRSTUVWXYZ='()/><:;$?][↓^\¤#*"  0123456789+-.*ABCDEFGHIJKLMNOPQRSTUVWXYZ='()/><:;$?][↓^\¤#*"  0123456789+-..*ABC
ABCDEFGHIJKLMNOPQRSTUVWXYZ='()/><:;$?][↓^\¤#*"  0123456789+-.*ABCDEFGHIJKLMNOPQRSTUVWXYZ='()/><:;$?][↓^\¤#*"  0123456789+-..*ABCD
BCDEFGHIJKLMNOPQRSTUVWXYZ='()/><:;$?][↓^\¤#*"  0123456789+-.*ABCDEFGHIJKLMNOPQRSTUVWXYZ='()/><:;$?][↓^\¤#*"  0123456789+-..*ABCDE
CDEFGHIJKLMNOPQRSTUVWXYZ='()/><:;$?][↓^\¤#*"  0123456789+-.*ABCDEFGHIJKLMNOPQRSTUVWXYZ='()/><:;$?][↓^\¤#*"  0123456789+-..*ABCDEF
DEFGHIJKLMNOPQRSTUVWXYZ='()/><:;$?][↓^\¤#*"  0123456789+-.*ABCDEFGHIJKLMNOPQRSTUVWXYZ='()/><:;$?][↓^\¤#*"  0123456789+-..*ABCDEFG
EFGHIJKLMNOPQRSTUVWXYZ='()/><:;$?][↓^\¤#*"  0123456789+-.*ABCDEFGHIJKLMNOPQRSTUVWXYZ='()/><:;$?][↓^\¤#*"  0123456789+-..*ABCDEFGH
FGHIJKLMNOPQRSTUVWXYZ='()/><:;$?][↓^\¤#*"  0123456789+-.*ABCDEFGHIJKLMNOPQRSTUVWXYZ='()/><:;$?][↓^\¤#*"  0123456789+-..*ABCDEFGHI
GHIJKLMNOPQRSTUVWXYZ='()/><:;$?][↓^\¤#*"  0123456789+-.*ABCDEFGHIJKLMNOPQRSTUVWXYZ='()/><:;$?][↓^\¤#*"  0123456789+-..*ABCDEFGHIJ
HIJKLMNOPQRSTUVWXYZ='()/><:;$?][↓^\¤#*"  0123456789+-.*ABCDEFGHIJKLMNOPQRSTUVWXYZ='()/><:;$?][↓^\¤#*"  0123456789+-..*ABCDEFGHIJK
IJKLMNOPQRSTUVWXYZ='()/><:;$?][↓^\¤#*"  0123456789+-.*ABCDEFGHIJKLMNOPQRSTUVWXYZ='()/><:;$?][↓^\¤#*"  0123456789+-..*ABCDEFGHIJKL
JKLMNOPQRSTUVWXYZ='()/><:;$?][↓^\¤#*"  0123456789+-.*ABCDEFGHIJKLMNOPQRSTUVWXYZ='()/><:;$?][↓^\¤#*"  0123456789+-..*ABCDEFGHIJKLM
KLMNOPQRSTUVWXYZ='()/><:;$?][↓^\¤#*"  0123456789+-.*ABCDEFGHIJKLMNOPQRSTUVWXYZ='()/><:;$?][↓^\¤#*"  0123456789+-..*ABCDEFGHIJKLMN
LMNOPQRSTUVWXYZ='()/><:;$?][↓^\¤#*"  0123456789+-.*ABCDEFGHIJKLMNOPQRSTUVWXYZ='()/><:;$?][↓^\¤#*"  0123456789+-..*ABCDEFGHIJKLMNO
MNOPQRSTUVWXYZ='()/><:;$?][↓^\¤#*"  0123456789+-.*ABCDEFGHIJKLMNOPQRSTUVWXYZ='()/><:;$?][↓^\¤#*"  0123456789+-..*ABCDEFGHIJKLMNOP
NOPQRSTUVWXYZ='()/><:;$?][↓^\¤#*"  0123456789+-.*ABCDEFGHIJKLMNOPQRSTUVWXYZ='()/><:;$?][↓^\¤#*"  0123456789+-..*ABCDEFGHIJKLMNOPQ
OPQRSTUVWXYZ='()/><:;$?][↓^\¤#*"  0123456789+-.*ABCDEFGHIJKLMNOPQRSTUVWXYZ='()/><:;$?][↓^\¤#*"  0123456789+-..*ABCDEFGHIJKLMNOPQR
PQRSTUVWXYZ='()/><:;$?][↓^\¤#*"  0123456789+-.*ABCDEFGHIJKLMNOPQRSTUVWXYZ='()/><:;$?][↓^\¤#*"  0123456789+-..*ABCDEFGHIJKLMNOPQRS
QRSTUVWXYZ='()/><:;$?][↓^\¤#*"  0123456789+-.*ABCDEFGHIJKLMNOPQRSTUVWXYZ='()/><:;$?][↓^\¤#*"  0123456789+-..*ABCDEFGHIJKLMNOPQRST
RSTUVWXYZ='()/><:;$?][↓^\¤#*"  0123456789+-.*ABCDEFGHIJKLMNOPQRSTUVWXYZ='()/><:;$?][↓^\¤#*"  0123456789+-..*ABCDEFGHIJKLMNOPQRSTU
STUVWXYZ='()/><:;$?][↓^\¤#*"  0123456789+-.*ABCDEFGHIJKLMNOPQRSTUVWXYZ='()/><:;$?][↓^\¤#*"  0123456789+-..*ABCDEFGHIJKLMNOPQRSTUV
TUVWXYZ='()/><:;$?][↓^\¤#*"  0123456789+-.*ABCDEFGHIJKLMNOPQRSTUVWXYZ='()/><:;$?][↓^\¤#*"  0123456789+-..*ABCDEFGHIJKLMNOPQRSTUVW
UVWXYZ='()/><:;$?][↓^\¤#*"  0123456789+-.*ABCDEFGHIJKLMNOPQRSTUVWXYZ='()/><:;$?][↓^\¤#*"  0123456789+-..*ABCDEFGHIJKLMNOPQRSTUVWX
VWXYZ='()/><:;$?][↓^\¤#*"  0123456789+-.*ABCDEFGHIJKLMNOPQRSTUVWXYZ='()/><:;$?][↓^\¤#*"  0123456789+-..*ABCDEFGHIJKLMNOPQRSTUVWXY
WXYZ='()/><:;$?][↓^\¤#*"  0123456789+-.*ABCDEFGHIJKLMNOPQRSTUVWXYZ='()/><:;$?][↓^\¤#*"  0123456789+-..*ABCDEFGHIJKLMNOPQRSTUVWXYZ
XYZ='()/><:;$?][↓^\¤#*"  0123456789+-.*ABCDEFGHIJKLMNOPQRSTUVWXYZ='()/><:;$?][↓^\¤#*"  0123456789+-..*ABCDEFGHIJKLMNOPQRSTUVWXYZ=
YZ='()/><:;$?][↓^\¤#*"  0123456789+-.*ABCDEFGHIJKLMNOPQRSTUVWXYZ='()/><:;$?][↓^\¤#*"  0123456789+-..*ABCDEFGHIJKLMNOPQRSTUVWXYZ='
Z='()/><:;$?][↓^\¤#*"  0123456789+-.*ABCDEFGHIJKLMNOPQRSTUVWXYZ='()/><:;$?][↓^\¤#*"  0123456789+-..*ABCDEFGHIJKLMNOPQRSTUVWXYZ='(
='()/><:;$?][↓^\¤#*"  0123456789+-.*ABCDEFGHIJKLMNOPQRSTUVWXYZ='()/><:;$?][↓^\¤#*"  0123456789+-..*ABCDEFGHIJKLMNOPQRSTUVWXYZ='()
```

RSTUVWXYZ='()/><:;$?][↓v^\n*#M 0123456789+-.,*ABCDEFGHIJKLMNOPQRSTUVWXYZ='()/><:;$?][↓v^\n*#M 0123456789+-.,*ABCDEFGHIJKLMNOPQRSTU
STUVWXYZ='()/><:;$?][↓v^\n*#M 0123456789+-.,*ABCDEFGHIJKLMNOPQRSTUVWXYZ='()/><:;$?][↓v^\n*#M 0123456789+-.,*ABCDEFGHIJKLMNOPQRSTUV
TUVWXYZ='()/><:;$?][↓v^\n*#M 0123456789+-.,*ABCDEFGHIJKLMNOPQRSTUVWXYZ='()/><:;$?][↓v^\n*#M 0123456789+-.,*ABCDEFGHIJKLMNOPQRSTUVW
UVWXYZ='()/><:;$?][↓v^\n*#M 0123456789+-.,*ABCDEFGHIJKLMNOPQRSTUVWXYZ='()/><:;$?][↓v^\n*#M 0123456789+-.,*ABCDEFGHIJKLMNOPQRSTUVWX
VWXYZ='()/><:;$?][↓v^\n*#M 0123456789+-.,*ABCDEFGHIJKLMNOPQRSTUVWXYZ='()/><:;$?][↓v^\n*#M 0123456789+-.,*ABCDEFGHIJKLMNOPQRSTUVWXY
WXYZ='()/><:;$?][↓v^\n*#M 0123456789+-.,*ABCDEFGHIJKLMNOPQRSTUVWXYZ='()/><:;$?][↓v^\n*#M 0123456789+-.,*ABCDEFGHIJKLMNOPQRSTUVWXYZ
XYZ='()/><:;$?][↓v^\n*#M 0123456789+-.,*ABCDEFGHIJKLMNOPQRSTUVWXYZ='()/><:;$?][↓v^\n*#M 0123456789+-.,*ABCDEFGHIJKLMNOPQRSTUVWXYZ=
YZ='()/><:;$?][↓v^\n*#M 0123456789+-.,*ABCDEFGHIJKLMNOPQRSTUVWXYZ='()/><:;$?][↓v^\n*#M 0123456789+-.,*ABCDEFGHIJKLMNOPQRSTUVWXYZ='
Z='()/><:;$?][↓v^\n*#M 0123456789+-.,*ABCDEFGHIJKLMNOPQRSTUVWXYZ='()/><:;$?][↓v^\n*#M 0123456789+-.,*ABCDEFGHIJKLMNOPQRSTUVWXYZ='(
='()/><:;$?][↓v^\n*#M 0123456789+-.,*ABCDEFGHIJKLMNOPQRSTUVWXYZ='()/><:;$?][↓v^\n*#M 0123456789+-.,*ABCDEFGHIJKLMNOPQRSTUVWXYZ='()
()/><:;$?][↓v^\n*#M 0123456789+-.,*ABCDEFGHIJKLMNOPQRSTUVWXYZ='()/><:;$?][↓v^\n*#M 0123456789+-.,*ABCDEFGHIJKLMNOPQRSTUVWXYZ='()/
)/><:;$?][↓v^\n*#M 0123456789+-.,*ABCDEFGHIJKLMNOPQRSTUVWXYZ='()/><:;$?][↓v^\n*#M 0123456789+-.,*ABCDEFGHIJKLMNOPQRSTUVWXYZ='()/><
/><:;$?][↓v^\n*#M 0123456789+-.,*ABCDEFGHIJKLMNOPQRSTUVWXYZ='()/><:;$?][↓v^\n*#M 0123456789+-.,*ABCDEFGHIJKLMNOPQRSTUVWXYZ='()/><:
><:;$?][↓v^\n*#M 0123456789+-.,*ABCDEFGHIJKLMNOPQRSTUVWXYZ='()/><:;$?][↓v^\n*#M 0123456789+-.,*ABCDEFGHIJKLMNOPQRSTUVWXYZ='()/><:;
<:;$?][↓v^\n*#M 0123456789+-.,*ABCDEFGHIJKLMNOPQRSTUVWXYZ='()/><:;$?][↓v^\n*#M 0123456789+-.,*ABCDEFGHIJKLMNOPQRSTUVWXYZ='()/><:;$
:;$?][↓v^\n*#M 0123456789+-.,*ABCDEFGHIJKLMNOPQRSTUVWXYZ='()/><:;$?][↓v^\n*#M 0123456789+-.,*ABCDEFGHIJKLMNOPQRSTUVWXYZ='()/><:;$?
$?][↓v^\n*#M 0123456789+-.,*ABCDEFGHIJKLMNOPQRSTUVWXYZ='()/><:;$?][↓v^\n*#M 0123456789+-.,*ABCDEFGHIJKLMNOPQRSTUVWXYZ='()/><:;$?][
?][↓v^\n*#M 0123456789+-.,*ABCDEFGHIJKLMNOPQRSTUVWXYZ='()/><:;$?][↓v^\n*#M 0123456789+-.,*ABCDEFGHIJKLMNOPQRSTUVWXYZ='()/><:;$?][↓
][↓v^\n*#M 0123456789+-.,*ABCDEFGHIJKLMNOPQRSTUVWXYZ='()/><:;$?][↓v^\n*#M 0123456789+-.,*ABCDEFGHIJKLMNOPQRSTUVWXYZ='()/><:;$?][↓v
[↓v^\n*#M 0123456789+-.,*ABCDEFGHIJKLMNOPQRSTUVWXYZ='()/><:;$?][↓v^\n*#M 0123456789+-.,*ABCDEFGHIJKLMNOPQRSTUVWXYZ='()/><:;$?][↓v^
↓v^\n*#M 0123456789+-.,*ABCDEFGHIJKLMNOPQRSTUVWXYZ='()/><:;$?][↓v^\n*#M 0123456789+-.,*ABCDEFGHIJKLMNOPQRSTUVWXYZ='()/><:;$?][↓v^\
v^\n*#M 0123456789+-.,*ABCDEFGHIJKLMNOPQRSTUVWXYZ='()/><:;$?][↓v^\n*#M 0123456789+-.,*ABCDEFGHIJKLMNOPQRSTUVWXYZ='()/><:;$?][↓v^\n
^\n*#M 0123456789+-.,*ABCDEFGHIJKLMNOPQRSTUVWXYZ='()/><:;$?][↓v^\n*#M 0123456789+-.,*ABCDEFGHIJKLMNOPQRSTUVWXYZ='()/><:;$?][↓v^\n*
\n*#M 0123456789+-.,*ABCDEFGHIJKLMNOPQRSTUVWXYZ='()/><:;$?][↓v^\n*#M 0123456789+-.,*ABCDEFGHIJKLMNOPQRSTUVWXYZ='()/><:;$?][↓v^\n**
n*#M 0123456789+-.,*ABCDEFGHIJKLMNOPQRSTUVWXYZ='()/><:;$?][↓v^\n*#M 0123456789+-.,*ABCDEFGHIJKLMNOPQRSTUVWXYZ='()/><:;$?][↓v^\n*#M
**M 0123456789+-.,*ABCDEFGHIJKLMNOPQRSTUVWXYZ='()/><:;$?][↓v^\n*#M 0123456789+-.,*ABCDEFGHIJKLMNOPQRSTUVWXYZ='()/><:;$?][↓v^\n*#M
#M 0123456789+-.,*ABCDEFGHIJKLMNOPQRSTUVWXYZ='()/><:;$?][↓v^\n*#M 0123456789+-.,*ABCDEFGHIJKLMNOPQRSTUVWXYZ='()/><:;$?][↓v^\n*#M 0123456789+-.,*ABCDEFGHIJKLMNOPQRSTUVWXYZ='()/><:;$?][↓v^\n*#M 0
0123456789+-.,*ABCDEFGHIJKLMNOPQRSTUVWXYZ='()/><:;$?][↓v^\n*#M 0123456789+-.,*ABCDEFGHIJKLMNOPQRSTUVWXYZ='()/><:;$?][↓v^\n*#M 01
0123456789+-.,*ABCDEFGHIJKLMNOPQRSTUVWXYZ='()/><:;$?][↓v^\n*#M 0123456789+-.,*ABCDEFGHIJKLMNOPQRSTUVWXYZ='()/><:;$?][↓v^\n*#M 012
0123456789+-.,*ABCDEFGHIJKLMNOPQRSTUVWXYZ='()/><:;$?][↓v^\n*#M 0123456789+-.,*ABCDEFGHIJKLMNOPQRSTUVWXYZ='()/><:;$?][↓v^\n*#M 0123
1234567789+-.,*ABCDEFGHIJKLMNOPQRSTUVWXYZ='()/><:;$?][↓v^\n*#M 0123456789+-.,*ABCDEFGHIJKLMNOPQRSTUVWXYZ='()/><:;$?][↓v^\n*#M 01234

```
*       CHANNEL TESTS


   CHANNEL 0 TEST
   CHANNEL 1 TEST
```

CHANNEL 2 TEST

CHANNEL 3 TEST
CHANNEL 4 TEST

CHANNEL 5 TEST

CHANNEL 6 TEST

CHANNEL 7 TEST

CHANNEL SEVEN TRUE

```
*       PAPER SPACE TESTS

NO SPACE                NO SPACE                NO SPACE

SINGLE SPACE
                        SINGLE SPACE
                                                SINGLE SPACE

DOUBLE SPACE
                        DOUBLE SPACE
                                                DOUBLE SPACE

TRIPLE SPACE
                        TRIPLE SPACE
                                                TRIPLE SPACE

SPACE 4 LINES
                        SPACE 4 LINES
                                                SPACE 4 LINES

SPACE 5 LINES
```

SPACE 5 LINES

SPACE 6 LINES

SPACE 6 LINES

SPACE 6 LINES

SPACE 7 LINES

SPACE 7 LINES

SPACE 7 LINES

```
*       THE FOLLOWING TEST WILL CHECK VERTICAL AND HORIZONTAL CONTROL.
```

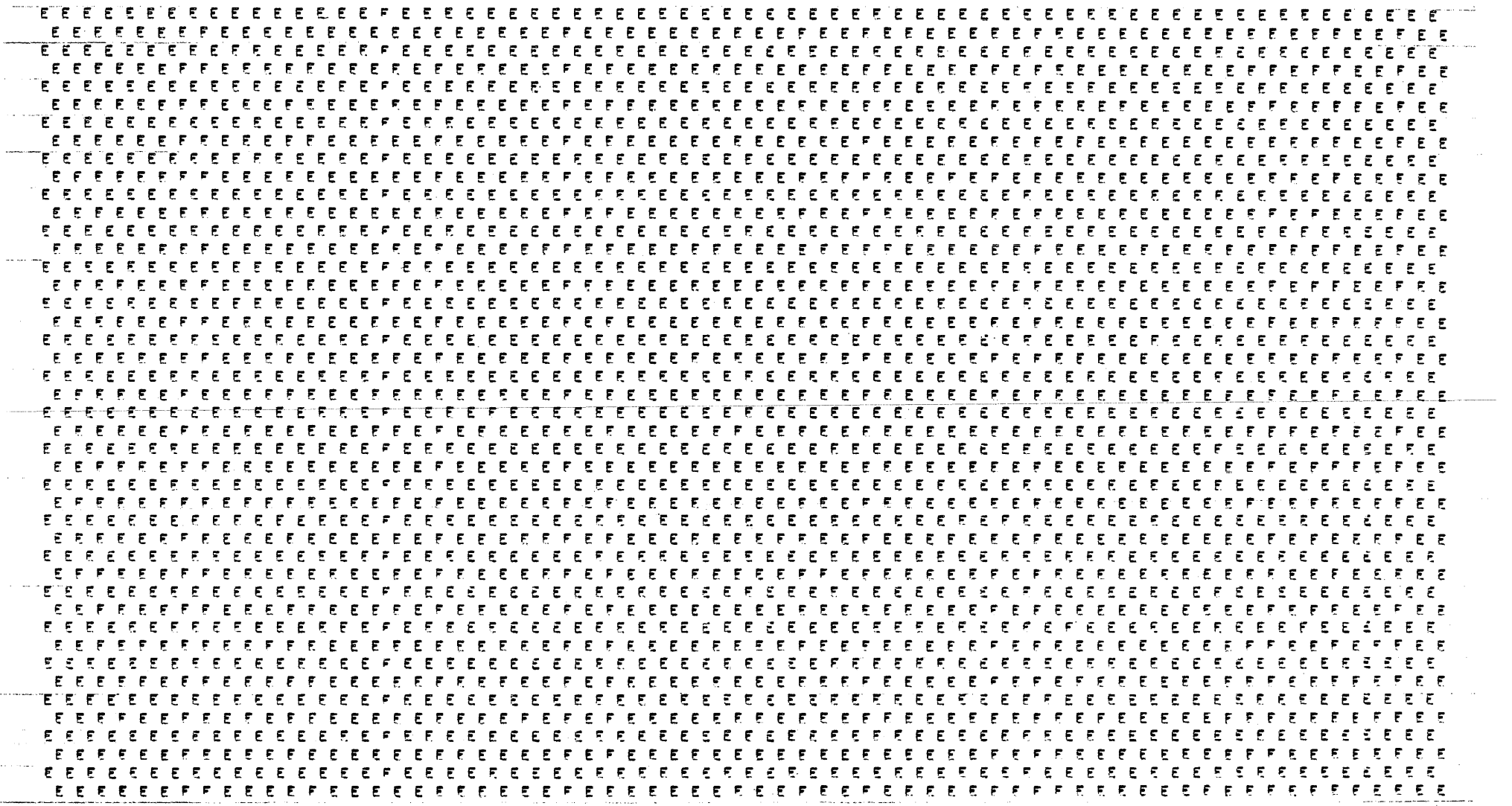

```
*       THE FOLLOWING TEST WILL CHECK MAXIMUM SPEED OF PRINTER LISTING.

EEEE
```

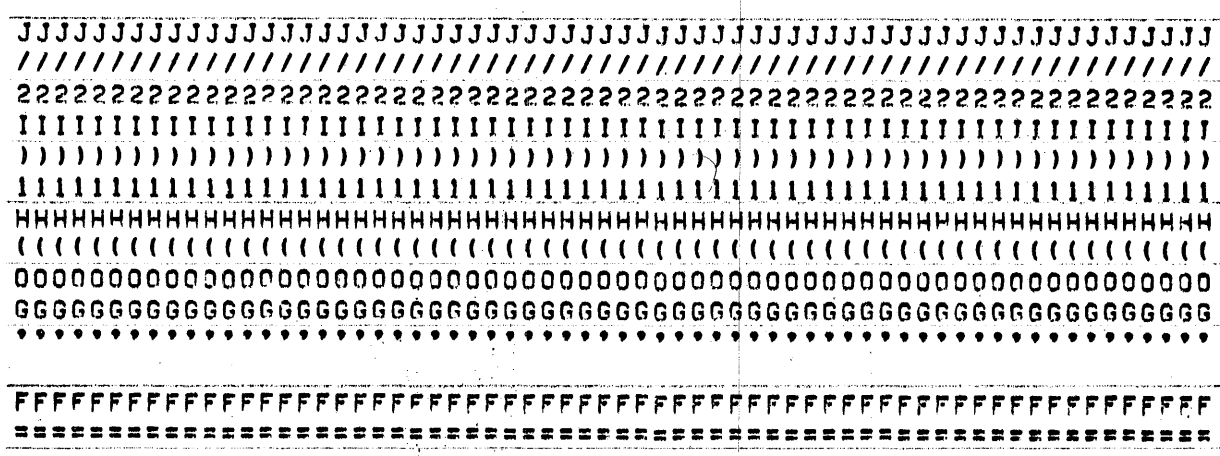

```
                                    1  *
                                    2  * BUFFERED LINE PRINTER TESTER          M. MULHOLLAND
                                    3  *
                    00150           4          ORG     104
00150   C 76 02335                  5          LDA     =0100150
00151   C 35 00001                  6          STA     1
00152   C 00 00000                  7  BP00    HLT
                                    8  EPTW    MACRO   A
                                    9          SKS     14060
                                   10          ENDM
                                   11  PSPW    MACRO   A,B
                                   12          VFD     012/21,3/B,06/66,3/A-1
                                   13          ENDM
                                   14  PRTW    MACRO   A
                                   15          SKS     12060
                                   16          ENDM
                                   17  PSCW    MACRO   A,B
                                   18          VFD     012/21,3/B,06/46,3/A-1
                                   19          ENDM
                                   20          PRTW    1
00153   C 40 12060                             SKS     12060
00154   C 01 00153                  21         BRU     *-1
                                   22          PSCW    1,1                 TOP OF PAGE
00155   00211460                               VFD     012/21,3/B,06/46,3/A-1
00156   C 76 01207                  23         LDA     LIST+1
00157   C 35 01200                  24         STA     TITLE
00160   C 76 01162                  25         LDA     C22
00161   C 35 02112                  26         STA     TEMPCT
00162   C 02 02660                  27         PLPW    1,4
00163   C 12 41200                  28  BP01   MIW*    TITLE                PRINT
00164   C 61 01200                  29         MIN     TITLE                PROGRAM
00165   1 00 02112                  30         REDUCE  TEMPCT               TITLE
00166   C 01 00163                  31         BRU     BP01
00167   C 02 14000                  32         TOPW
00170   C 40 21000                  33         BRTW
00171   C 01 00170                  34         BRU     *-1
                                   35          PRTW    1
00172   C 40 12060                             SKS     12060
00173   C 01 00172                  36         BRU     *-1
```

```
00174  C 40 11060      37          PFTW    1
00175  C 43 01141      38          BRM     ERROR
                        39          PSPW    1,4                     SPACE 4 LINES
00176  C0214660                     VFD     012/21,3/8,06/66,3/A-1
00177  C 40 20400      40  BP02    BPT     1                       TEST 1 WANTED
00200  C 01 00210      41          BRU     BP02A                   YES
00201  C 40 20200      42          BPT     2                       TEST 2 WANTED
00202  C 01 00327      43          BRU     BP10                    YES
00203  C 40 20100      44          BPT     3                       TEST 3 WANTED
00204  C 01 01004      45          BRU     BP20                    YES
00205  C 40 20040      46          BPT     4                       TEST 4 WANTED
00206  C 01 01067      47          BRU     BP30                    YES
00207  C 01 00177      48          BRU     BP02                    RECHECK BREAKPOINTS
00210  C 76 01210      49  BP02A   LDA     LIST+2
00211  C 35 01201      50          STA     TITLE+1
00212  C 76 01157      51          LDA     C17
00213  C 35 02113      52          STA     TEMPCT+1
00214  C 02 02660      53          PLPW    1,4
00215  C 12 41201      54  BP02M   MIW*    TITLE+1                  PRINT
00216  C 61 01201      55          MIN     TITLE+1                  FIRST
00217  1 00 02113      56          REDUCE  TEMPCT+1                 TEST
00220  C 01 00215      57          BRU     BP02M                    TITLE
00221  C 02 14000      58          TOPW
00222  C 40 21000      59          BRTW
00223  C 01 00222      60          BRU     *-1
                        61          PRTW    1
00224  C 40 12060                  SKS     12060
00225  C 01 00224      62          BRU     *-1
00226  C 40 11060      63          PFTW    1
00227  C 43 01141      64          BRM     ERROR
                        65          PSPW    1,5                     SPACE 5 LINES
00230  C0215660                     VFD     012/21,3/8,06/66,3/A-1
00231  C 02 02660      66          PLPW    1,4
00232  C 02 14000      67          TOPW
00233  C 40 21000      68          BRTW
00234  C 01 00233      69          BRU     *-1
                        70          PRTW    1
00235  C 40 12060                  SKS     12060
00236  C 01 00235      71          BRU     *-1
```

```
00237  C 76 01165      72            LDA     C131
00240  C 35 01175      73            STA     COUNT1
00241  C 76 01236      74            LDA     OUTPT1
00242  C 35 01234      75            STA     OUTPUT
00243  C 76 01237      76            LDA     OPMIN1
00244  C 35 01235      77            STA     OPMIN
00245  C 76 01221      78            LDA     K1                      PRESET
00246  C 35 01211      79            STA     LIST+3                  FIRST
00247  C 76 01222      80            LDA     K1+1                    FOUR
00250  C 35 01212      81            STA     LIST+4                  LINES
00251  C 76 01223      82            LDA     K1+2                    OF
00252  C 35 01213      83            STA     LIST+5                  DATA
00253  C 76 01224      84            LDA     K1+3
00254  C 35 01214      85            STA     LIST+6
00255  C 76 01211      86    BP02R   LDA     LIST+3
00256  C 35 01230      87            STA     DATA
00257  C 76 01212      88            LDA     LIST+4
00260  C 35 01231      89            STA     DATA+1
00261  C 76 01213      90            LDA     LIST+5
00262  C 35 01232      91            STA     DATA+2
00263  C 76 01214      92            LDA     LIST+6
00264  C 35 01233      93            STA     DATA+3
00265  C 76 01234      94            LDA     OUTPUT
00266  C 35 00277      95            STA     BP03
00267  C 76 01235      96            LDA     OPMIN
00270  C 35 00300      97            STA     BP03+1
00271  C 76 01153      98            LDA     C3                      PRESET LOOP COUNTER
00272  C 35 02123      99            STA     TEMP
00273  C 76 01163     100            LDA     C32                     PRESET LOOP COUNTER
00274  C 35 02114     101            STA     TEMPCT+2
00275  C 02 02660     102            PLPW    1,4
                      103            PSCW    1,0
00276  00210460                      VFD     012/21,3/8,06/46,3/A-1
00277  C 00 00000     104    BP03    PZE     **                      PRINT LINE OF TEST 1
00300  C 00 00000     105            PZE     **
00301  1 00 02114     106            REDUCE  TEMPCT+2                DONE 33 WORDS
00302  C 01 00277     107            BRU     BP03                    NO
00303  C 02 14000     108            TOPW                            YES
00304  C 40 21000     109            BRTW
```

```
00305  C 01 00304     110          BRU     *-1
                      111          PRTW    1
00306  C 40 12060                  SKS     12060
00307  C 01 00306     112          BRU     *-1
00310  C 40 11060     113          PFTW    1
00311  C 43 01141     114          BRM     ERROR
00312  1 00 01175     115          REDUCE  COUNT1          DONE WITH 132 LINES
00313  C 01 00316     116          BRU     BP04            NO
                      117          PSCW    1,1             YES
00314  C0211460                    VFD     012/21,3/B,06/46,3/A-1
00315  C 01 00201     118          BRU     BP02+2          TEST BREAKPOINT 2
00316  C 61 00277     119  BP04    MIN     BP03
00317  C 61 00300     120          MIN     BP03+1
00320  1 00 02123     121          REDUCE  TEMP            DONE 4 LOOPS
00321  C 01 00273     122          BRU     BP03-4          NO
00322  C 61 01211     123          MIN     LIST+3          YES
00323  C 61 01212     124          MIN     LIST+4
00324  C 61 01213     125          MIN     LIST+5
00325  C 61 01214     126          MIN     LIST+6
00326  C 01 00255     127          BRU     BP02R           DO NEXT SET OF 4
00327  C 76 01215     128  BP10    LDA     LIST+7          SECOND TEST
00330  C 35 01202     129          STA     TITLE+2         MSGS
00331  C 76 01154     130          LDA     C4
00332  C 35 02115     131          STA     TEMPCT+3
00333  C 02 02660     132          PLPW    1,4
00334  C 12 41202     133  BP11    MIW*    TITLE+2          PRINT
00335  C 61 01202     134          MIN     TITLE+2          SECOND
00336  1 00 02115     135          REDUCE  TEMPCT+3         TEST
00337  C 01 00334     136          BRU     BP11             TITLE
00340  C 02 14000     137          TOPW
00341  C 40 21000     138          BRTW
00342  C 01 00341     139          BRU     *-1
                      140          PRTW    1
00343  C 40 12060                  SKS     12060
00344  C 01 00343     141          BRU     *-1
00345  C 40 11060     142          PFTW    1
00346  C 43 01141     143          BRM     ERROR
                      144          PSPW    1,4             SPACE 4 LINES
00347  C0214660                    VFD     012/21,3/B,06/65,3/A-1
```

```
00350  C 76 02230     145          LDA     LIST1
00351  C 35 02240     146          STA     CHATIT
00352  C 76 01153     147          LDA     C3
00353  C 35 02115     148          STA     TEMPCT+3
00354  C 02 02660     149          PLPW    1,4
00355  C 12 42240     150    BP12  MIW*    CHATIT                CHANNEL 0 TITLE
00356  C 61 02240     151          MIN     CHATIT
00357  1 00 02115     152          REDUCE  TEMPCT+3
00360  C 01 00355     153          BRU     BP12
00361  C 02 14000     154          TOPW
00362  C 40 21000     155          BRTW
00363  C 01 00362     156          BRU     *-1
                      157          PRTW    1
00364  C 40 12060                  SKS     12060
00365  C 01 00364     158          BRU     *-1
00366  C 40 11060     159          PFTW    1
00367  C 43 01141     160          BRM     ERROR
                      161          PSCW    1,0
00370  C0210460                    VFD     012/21,3/3,36/45,3/A-1
00371  C 26 02231     162          LDA     LIST1+1
00372  C 35 02241     163          STA     CHATIT+1
00373  C 76 01153     164          LDA     C3
00374  C 35 02115     165          STA     TEMPCT+3
00375  C 02 02660     166          PLPW    1,4
00376  C 12 42241     167    BP13  MIW*    CHATIT+1              CHANNEL 1 TITLE
00377  C 61 02241     168          MIN     CHATIT+1
00400  1 00 02115     169          REDUCE  TEMPCT+3
00401  C 01 00376     170          BRU     BP13
00402  C 02 14000     171          TOPW
00403  C 40 21000     172          BRTW
00404  C 01 00403     173          BRU     *-1
                      174          PRTW    1
00405  C 40 12060                  SKS     12060
00406  C 01 00405     175          BRU     *-1
00407  C 40 11060     176          PFTW    1
00410  C 43 01141     177          BRM     ERROR
                      178          EPTW    1
00411  C 40 14060                  SKS     14060
00412  C 43 00642     179          BRM     BP19A                 CHANNEL 7 TRUE
```

```
                        180          PSCW    1,1
00413  00211460                     VFD     012/21,3/B,06/46,3/A-1
00414  0 76 02232       181          LDA     LIST1+2
00415  0 35 02242       182          STA     CHATIT+2
00416  0 76 01153       183          LDA     C3
00417  0 35 02115       184          STA     TEMPCT+3
00420  0 02 02660       185          PLPW    1,4
00421  0 12 42242       186  BP14    MIW*    CHATIT+2            CHANNEL 2 TITLE
00422  0 61 02242       187          MIN     CHATIT+2
00423  1 00 02115       188          REDUCE  TEMPCT+3
00424  0 01 00421       189          BRU     BP14
00425  0 02 14000       190          TOPW
00426  0 40 21000       191          BRTW
00427  0 01 00426       192          BRU     *-1
                        193          PRTW    1
00430  0 40 12060                    SKS     12060
00431  0 01 00430       194          BRU     *-1
00432  0 40 11060       195          PFTW    1
00433  0 43 01141       196          BRM     ERROR
                        197          EPTW    1
00434  0 40 14060                    SKS     14060
00435  0 43 00642       198          BRM     BP19A               CHANNEL 7 TRUE
                        199          PSCW    1,2
00436  00212460                     VFD     012/21,3/B,06/46,3/A-1
00437  0 76 02233       200          LDA     LIST1+3
00440  0 35 02243       201          STA     CHATIT+3
00441  0 76 01153       202          LDA     C3
00442  0 35 02115       203          STA     TEMPCT+3
00443  0 02 02660       204          PLPW    1,4
00444  0 12 42243       205  BP15    MIW*    CHATIT+3            CHANNEL 3 TITLE
00445  0 61 02243       206          MIN     CHATIT+3
00446  1 00 02115       207          REDUCE  TEMPCT+3
00447  0 01 00444       208          BRU     BP15
00450  0 02 14000       209          TOPW
00451  0 40 21000       210          BRTW
00452  0 01 00451       211          BRU     *-1
                        212          PRTW    1
00453  0 40 12060                    SKS     12060
00454  0 01 00453       213          BRU     *-1
```

```
00455  C 40 11060     214          PFTW    1
00456  C 43 01141     215          BRM     ERROR
                      216          EPTW    1
00457  C 40 14060                  SKS     14060
00460  C 43 00642     217          BRM     BP19A                CHANNEL 7 TRUE
                      218          PSCW    1,3
00461  C0213460                    VFD     012/21,3/B,06/46,3/A-1
00462  C 76 02234     219          LDA     LIST1+4
00463  C 35 02244     220          STA     CHATIT+4
00464  C 76 01153     221          LDA     C3
00465  C 35 02115     222          STA     TEMPCT+3
00466  C 02 02660     223          PLPW    1,4
00467  C 12 42244     224  BP16    MIW*    CHATIT+4             CHANNEL 4 TITLE
00470  C 61 02244     225          MIN     CHATIT+4
00471  1 00 02115     226          REDUCE  TEMPCT+3
00472  C 01 00467     227          BRU     BP16
00473  C 02 14000     228          TOPW
00474  C 40 21000     229          BRTW
00475  C 01 00474     230          BRU     *-1
                      231          PRTW    1
00476  C 40 12060                  SKS     12060
00477  C 01 00476     232          BRU     *-1
00500  C 40 11060     233          PFTW    1
00501  C 43 01141     234          BRM     ERROR
                      235          EPTW    1
00502  C 40 14060                  SKS     14060
00503  C 43 00642     236          BRM     BP19A                CHANNEL 7 TRUE
                      237          PSCW    1,4
00504  C0214460                    VFD     012/21,3/B,06/46,3/A-1
00505  C 76 02235     238          LDA     LIST1+5
00506  C 35 02245     239          STA     CHATIT+5
00507  C 76 01153     240          LDA     C3
00510  C 35 02115     241          STA     TEMPCT+3
00511  C 02 02660     242          PLPW    1,4
00512  C 12 42245     243  BP17    MIW*    CHATIT+5             CHANNEL 5 TITLE
00513  C 61 02245     244          MIN     CHATIT+5
00514  1 00 02115     245          REDUCE  TEMPCT+3
00515  C 01 00512     246          BRU     BP17
00516  C 02 14000     247          TOPW
```

```
00517  C 40 21000     248            BRTW
00520  C 01 00517     249            BRU     *-1
                      250            PRTW    1
00521  C 40 12060                    SKS     12060
00522  C 01 00521     251            BRU     *-1
00523  C 40 11060     252            PFTW    1
00524  C 43 01141     253            BRM     ERROR
                      254            EPTW    1
00525  C 40 14060                    SKS     14060
00526  C 43 00642     255            BRM     BP19A                   CHANNEL 7 TRUE
                      256            PSCW    1,5
00527  C0216460                      VFD     012/21,3/5,06/46,3/A-1
00530  C 76 02236     257            LDA     LIST1+6
00531  C 35 02246     258            STA     CHATIT+6
00532  C 76 01153     259            LDA     C3
00533  C 35 02115     260            STA     TEMPCT+3
00534  C 02 02660     261            PLPW    1,4
00535  C 12 42246     262    BP18    MIW*    CHATIT+6                CHANNEL 6 TITLE
00536  C 61 02246     263            MIN     CHATIT+6
00537  1 00 02115     264            REDUCE  TEMPCT+3
00540  C 01 00535     265            BRU     BP18
00541  C 02 14000     266            TBPW
00542  C 40 21000     267            BRTW
00543  C 01 00542     268            BRU     *-1
                      269            PRTW    1
00544  C 40 12060                    SKS     12060
00545  C 01 00544     270            BRU     *-1
00546  C 40 11060     271            PFTW    1
00547  C 43 01141     272            BRM     ERROR
                      273            EPTW    1
00550  C 40 14060                    SKS     14060
00551  C 43 00642     274            BRM     BP19A                   CHANNEL 7 TRUE
                      275            PSCW    1,6
00552  C0216460                      VFD     012/21,3/5,06/46,3/A-1
00553  C 76 02237     276            LDA     LIST1+7
00554  C 35 02247     277            STA     CHATIT+7
00555  C 76 01153     278            LDA     C3
00556  C 35 02115     279            STA     TEMPCT+3
00557  C 02 02660     280            PLPW    1,4
```

```
00560  C 12 42247     281    BP19   MIW*    CHATIT+7              CHANNEL 7 TITLE
00561  C 61 02247     282           MIN     CHATIT+7
00562  1 00 02115     283           REDUCE  TEMPCT+3
00563  C 01 00560     284           BRU     BP19
00564  C 02 14000     285           TOPW
00565  C 40 21000     286           BRTW
00566  C 01 00565     287           BRU     *-1
                      288           PRTW    1
00567  C 40 12060                   SKS     12060
00570  C 01 00567     289           BRU     *-1
00571  C 40 11060     290           PFTW    1
00572  C 43 01141     291           BRM     ERROR
                      292           EPTW    1
00573  C 40 14060                   SKS     14060
00574  C 43 00642     293           BRM     BP19A                 CHANNEL 7 TRUE
                      294           PSCW    1,7
00575  00217460                     VFD     012/21,3/8,06/46,3/A-1
00576  C 02 02660     295           PLPW    1,4
00577  C 02 14000     296           TOPW
00600  C 40 21000     297           BRTW
00601  C 01 00600     298           BRU     *-1
                      299           PRTW    1
00602  C 40 12060                   SKS     12060
00603  C 01 00602     300           BRU     *-1
00604  C 02 02660     301           PLPW    1,4
                      302           EPTW    1
00605  C 40 14060                   SKS     14060
00606  C 01 00613     303           BRU     *+5
00607  C 71 01170     304           LDX     M5
00610  C 12 41327     305           MIW*    CHA7F
00611  C 41 00610     306           BRX     *-1
00612  C 01 00616     307           BRU     *+4
00613  C 71 01170     308           LDX     M5
00614  C 12 41335     309           MIW*    CH47T
00615  C 41 00614     310           BRX     *-1
00616  C 02 14000     311           TOPW
00617  C 40 21000     312           BRTW
00620  C 01 00617     313           BRU     *-1
                      314           PRTW    1
```

```
00621  C 40 12060          SKS     12060
00622  C 01 00621    315   BRU     *-1
                     316   PSCW    1,0
00623  00210460            VFD     012/21,3/8,06/46,3/A-1
00624  C 02 02660    317   PLPW    1,4
00625  C 02 14000    318   TSPW
                     319   PRTW    1
00626  C 40 12060          SKS     12060
00627  C 01 00626    320   BRU     *-1
00630  C 02 02641    321   TYPW    1,4
00631  C 71 01171    322   LDX     M5
00632  C 12 42323    323   MIW*    CHAM                CHANNEL MESSAGE
00633  C 41 00632    324   BRX     *-1
00634  C 12 01166    325   MIW     CR4
00635  C 02 14000    326   TSPW
00636  C 40 21000    327   BRTW
00637  C 01 00636    328   BRU     *-1
00640  C 00 00000    329   HLT
00641  C 01 00655    330   BRU     BP19B
00642  C 00 00000    331   BP19A   PZE
00643  C 02 02660    332   PLPW    1,4
00644  C 71 01172    333   LDX     M12
00645  C 12 41352    334   MIW*    CH7T
00646  C 41 00645    335   BRX     *-1
00647  C 02 14000    336   TSPW
00650  C 40 21000    337   BRTW
00651  C 01 00650    338   BRU     *-1
                     339   PRTW
00652  C 40 12060          SKS     12060
00653  C 01 00652    340   BRU     *-1
00654  C 51 00642    341   BRR     BP19A
00655  C 76 01220    342   BP19B   LDA     LIST+10
00656  C 35 01205    343   STA     TITLE+5
00657  C 76 01155    344   LDA     C5
00660  C 35 02122    345   STA     TEMPCT+8
                     346   PSCW    1,1
00661  00211460            VFD     012/21,3/8,06/46,3/A-1
00662  C 02 02660    347   BP19C   PLPW    1,4
00663  C 12 41205    348   MIW*    TITLE+5             TITLE
```

```
00664  C 61 01205     349          MIN     TITLE+5                 OF
00665  1 00 02122     350          REDUCE  TEMPCT+9                PAPER
00666  C 01 00662     351          BRU     BP19C                   SPACE
00667  C 02 14000     352          TOPW                            TEST
00670  C 40 21000     353          BRTW
00671  C 01 00670     354          BRU     *-1
                      355          PRTW    1
00672  C 40 12060                  SKS     12060
00673  C 01 00672     356          BRU     *-1
00674  C 40 11000     357          PFTW    1
00675  C 43 01141     358          BRM     ERROR
00676  C 76 01156     359          LDA     C7
00677  C 35 02122     360          STA     TEMPCT+5
00700  C 76 41240     361  BP19D   LDA*    SPACE
00701  C 35 00722     362          STA     BP19E
00702  C 35 00741     363          STA     BP19F
00703  C 35 00760     364          STA     BP19G
00704  C 76 41251     365          LDA*    SPMSG
00705  C 35 01227     366          STA     MSPACE
                      367          PSPW    1,4                     SPACE 4 LINES
00706  00214660                    VFD     012/21,3/5,06/60,3/4-1
00707  C 02 02660     368          PLPW    1,4
00710  C 71 01167     369          LDX     M4
00711  C 12 41227     370          MIW*    MSPACE                  FIRST
00712  C 41 00711     371          BRX     *-1                     PAPER
00713  C 02 14000     372          TOPW                            SPACE
00714  C 40 21000     373          BRTW                            TITLE
00715  C 01 00714     374          BRU     *-1
                      375          PRTW    1
00716  C 40 12060                  SKS     12060
00717  C 01 00716     376          BRU     *-1
00720  C 40 11060     377          PFTW    1
00721  C 43 01141     378          BRM     ERROR
00722  C 00 00000     379  BP19E   PZE     **
00723  C 02 02660     380          PLPW    1,4
00724  C 71 01171     381          LDX     M6
00725  C 12 02064     382          MIW     MSG+1
00726  C 41 00725     383          BRX     *-1
00727  C 71 01157     384          LDX     M4
```

```
00730  0 12 41227   385          MIW*   MSPACE          SECOND
00731  0 41 00730   386          BRX    *-1             PAPER
00732  0 02 14000   387          TOPW                   SPACE
00733  0 40 21000   388          BRTW                   TITLE
00734  0 01 00733   389          BRU    *-1
                    390          PRTW   1
00735  0 40 12060                SKS    12060
00736  0 01 00735   391          BRU    *-1
00737  0 40 11060   392          PFTW   1
00740  0 43 01141   393          BRM    ERROR
00741  0 00 00000   394  BP19F   PZE    **
00742  0 02 02660   395          PLPW   1,4
00743  0 71 01172   396          LDX    M12
00744  0 12 02064   397          MIW    MSG+1
00745  0 41 00744   398          BRX    *-1
00746  0 71 01167   399          LDX    M4
00747  0 12 41227   400          MIW*   MSPACE          THIRD
00750  0 41 00747   401          BRX    *-1             PAPER
00751  0 02 14000   402          TOPW                   SPACE
00752  0 40 21000   403          BRTW                   TITLE
00753  0 01 00752   404          BRU    *-1
                    405          PRTW   1
00754  0 40 12060                SKS    12060
00755  0 01 00754   406          BRU    *-1
00756  0 40 11060   407          PFTW   1
00757  0 43 01141   408          BRM    ERROR
00760  0 00 00000   409  BP19G   PZE    **
00761  0 02 02060   410          PLPW   1,1
00762  0 12 02064   411          MIW    MSG+1
00763  0 02 14000   412          TOPW
00764  0 40 21000   413          BRTW
00765  0 01 00764   414          BRU    *-1
                    415          PRTW   1
00766  0 40 12060                SKS    12060
00767  0 01 00766   416          BRU    *-1
00770  0 61 01240   417          MIN    SPACE
00771  0 71 01170   418          LDX    M5
00772  0 61 01251   419          MIN    SPMSG
00773  0 41 00772   420          BRX    *-1
```

```
00774  1 00 02122     421            REDUCE  TEMPCT+8              DONE ALL 8 TESTS
00775  0 01 00700     422            BRU     BP19D                 NO
00776  0 76 01225     423            LDA     K2                    YES
00777  0 35 01240     424            STA     SPACE
01000  0 76 01225     425            LDA     K2+1
01001  0 35 01251     426            STA     SPMSG
                       427            PSCW    1,1
01002  00211460                      VFD     012/21,3/9,06/46,3/A-1
01003  0 01 00203     428            BRU     BP02+4
01004  0 76 01216     429    BP20    LDA     LIST+8
01005  0 35 01203     430            STA     TITLE+3
01006  0 76 01157     431            LDA     C17
01007  0 35 02116     432            STA     TEMPCT+4
01010  0 02 02660     433            PLPW    1,4
01011  0 12 41203     434    BP21    MIW*    TITLE+3               PRINT
01012  0 61 01203     435            MIN     TITLE+3               THIRD
01013  1 00 02116     436            REDUCE  TEMPCT+4              TEST
01014  0 01 01011     437            BRU     BP21                  TITLE
01015  0 02 14000     438            TOPW
01016  0 40 21000     439            BRTW
01017  0 01 01016     440            BRU     *-1
                       441            PRTW    1
01020  0 40 12060                    SKS     12060
01021  0 01 01020     442            BRU     *-1
01022  0 40 11060     443            PFTW    1
01023  0 43 01141     444            BRM     ERROR
                       445            PSPW    1,4                   SPACE 4 LINES
01024  00214660                      VFD     012/21,3/9,06/60,3/A-1
01025  0 76 01161     446            LDA     C21
01026  0 35 02117     447            STA     TEMPCT+5
01027  0 71 01174     448    BP22    LDX     M33                   EVEN
01030  0 02 02660     449            PLPW    1,4                   NUMBERED
01031  0 12 02164     450            MIW     M60                   LINES
01032  0 41 01031     451            BRX     *-1                   OF
01033  0 02 14000     452            TOPW                          TEST
01034  0 40 21000     453            BRTW
01035  0 01 01034     454            BRU     *-1
                       455            PRTW    1
01036  0 40 12060                    SKS     12060
```

```
01037  C 01 01036     456            BRU     *-1
01040  C 40 11060     457            PFTW    1
01041  C 43 01141     458            BRM     ERROR
                       459            PSCW    1,0
01042  C0210460                      VFD     012/21,3/B,06/46,3/A-1
01043  C 71 01174     460            LDX     M33             ODD
01044  C 02 02660     461            PLPW    1,4             NUMBERED
01045  C 12 02155     462            MIW     MSG7            LINES
01046  C 41 01046     463            BRX     *-1             OF
01047  C 02 14000     464            TOPW                    TEST
01050  C 40 21000     465            BRTW
01051  C 01 01050     466            BRU     *-1
                       467            PRTW    1
01052  C 40 12060                    SKS     12060
01053  C 01 01052     468            BRU     *-1
01054  C 40 11000     469            PFTW    1
01055  C 43 01141     470            BRM     ERROR
                       471            PSCW    1,0
01056  C0210460                      VFD     012/21,3/B,06/46,3/A-1
01057  1 00 02117     472            REDUCE  TEMPCT+5
01060  C 01 01027     473            BRU     BP22
01061  C 02 02660     474            PLPW    1,4
01062  C 02 14000     475            TOPW
                       476            PRTW    1
01063  C 40 12060                    SKS     12060
01064  C 01 01063     477            BRU     *-1
                       478            PSCW    1,1
01065  C0211460                      VFD     012/21,3/B,06/46,3/A-1
01066  C 01 00205     479            BRU     BP02+6
01067  C 76 01217     480    BP30    LDA     LIST+9
01070  C 35 01204     481            STA     TITLE+4
01071  C 76 01157     482            LDA     C17
01072  C 35 02120     483            STA     TEMPCT+6
01073  C 02 02660     484            PLPW    1,4             PRINT
01074  C 12 41204     485    BP31    MIW*    TITLE+4         FOURTH
01075  C 61 01204     486            MIN     TITLE+4         TEST
01076  1 00 02120     487            REDUCE  TEMPCT+6        TITLE
01077  C 01 01074     488            BRU     BP31
01100  C 02 14000     489            TOPW
```

```
01101  C 40 21000     490            BRTW
01102  C 01 01101     491            BRU     *-1
                      492            PRTW    1
01103  C 40 12060                    SKS     12060
01104  C 01 01103     493            BRU     *-1
01105  C 40 11060     494            PFTW    1
01106  C 43 01141     495            BRM     ERROR
                      496            PSPW    1,4                    SPACE 4 LINES
01107  C0214660                      VFD     012/21,3/5,06/66,3/A-1
01110  C 76 01206     497            LDA     LIST
01111  C 35 01177     498            STA     CHAR
01112  C 76 01164     499            LDA     C63
01113  C 35 02121     500            STA     TEMPCT+7
01114  C 02 02660     501            PLPW    1,4
01115  C 71 01173     502    BP32    LDX     M15                    PRINT
01116  C 12 41177     503            MIW*    CHAR                    CHARACTERS
01117  C 41 01116     504            BRX     *-1
01120  C 02 14000     505            TOPW
01121  C 40 21000     506            BRTW
01122  C 01 01121     507            BRU     *-1
                      508            PRTW    1
01123  C 40 12060                    SKS     12060
01124  C 01 01123     509            BRU     *-1
01125  C 40 11060     510            PFTW    1
01126  C 43 01141     511            BRM     ERROR
01127  C 61 01177     512            MIN     CHAR
                      513            PSCW    1,0
01130  C0210460                      VFD     012/21,3/5,06/46,3/A-1
01131  1 00 02121     514            REDUCE  TEMPCT+7
01132  C 01 01114     515            BRU     BP32-1
01133  C 02 02660     516            PLPW    1,4
01134  C 02 14000     517            TOPW
                      518            PRTW    1
01135  C 40 12060                    SKS     12060
01136  C 01 01135     519            BRU     *-1
                      520            PSCW    1,1
01137  C0211460                      VFD     012/21,3/5,06/46,3/A-1
01140  C 01 00177     521            BRU     BP02
01141  C 00 00000     522    ERROR   PZE     **
```

```
01142  C 02 02641     523        TYPW     1.4
01143  C 71 01167     524        LDX      M4
01144  C 12 42314     525        MIW*     PFM
01145  C 41 01144     526        BRX      *-1
01146  C 12 01166     527        MIW      CR4
01147  C 02 14000     528        TOPW
01150  C 40 21000     529        BRTW
01151  C 01 01150     530        BRU      *-1
01152  C 51 01141     531        BRR      ERROR
```

```
                                PAGE
                        *
                        * PROGRAM CONSTANTS AND PARAMETERS
                        *
01153  00000003         C3      DEC     3
01154  00000004         C4      DEC     4
01155  00000005         C5      DEC     5
01156  00000007         C7      DEC     7
01157  00000021         C17     DEC     17
01160  00000024         C20     DEC     20
01161  00000025         C21     DEC     21
01162  00000026         C22     DEC     22
01163  00000040         C32     DEC     32
01164  00000077         C63     DEC     63
01165  00000203         C131    DEC     131
01166  12121252         CR4     OCT     12121252
01167  77777774         M4      DEC     -4
01170  77777773         M5      DEC     -5
01171  77777772         M6      DEC     -6
01172  77777764         M12     DEC     -12
01173  77777760         M16     DEC     -16
01174  77777737         M33     DEC     -33
01175  0 00 00000       COUNT1  PZE     **
01176       00001       A       BSS     1
01177       00001       CHAR    BSS     1
01200       00006       TITLE   BSS     6
01206  0 00 01753       LIST    PZE     PRINT5
01207  0 00 02063               PZE     MSG                 23 WORD MESSAGE
01210  0 00 02125               PZE     MSG4                18 WORD MESSAGE
01211  0 00 01353               PZE     PRINT1
01212  0 00 01455               PZE     PRINT2
01213  0 00 01557               PZE     PRINT3
01214  0 00 01661               PZE     PRINT4
01215  0 00 02147               PZE     MSG5                5 WORD MESSAGE
01216  0 00 02156               PZE     MSG8                18 WORD MESSAGE
01217  0 00 02200               PZE     MSG9                18 WORD MESSAGE
01220  0 00 02222               PZE     MSG10
01221  0 00 01353       K1      PZE     PRINT1
01222  0 00 01455               PZE     PRINT2
```

```
01223  C 00 01557     571           PZE     PRINT3
01224  C 00 01661     572           PZE     PRINT4
01225  C 00 01241     573    K2     PZE     PSPACE
01226  C 00 01256     574           PZE     SPO
01227        00001     575    MSPACE BSS     1
01230        00004     576    DATA   BSS     4
01234        00001     577    OUTPUT BSS     1
01235        00001     578    OPMIN  BSS     1
01236  C 12 01230     579    OUTPT1 MIW*    DATA
01237  C 61 01230     580    OPMIN1 MIN     DATA
01240  C 00 01241     581    SPACE  PZE     PSPACE
                      582    PSPACE PSPW    1,0
01241  00210660                     VFD     012/21,3/8,06/66,3/4-1
                      583           PSPW    1,1
01242  00211660                     VFD     012/21,3/8,06/66,3/4-1
                      584           PSPW    1,2
01243  00212660                     VFD     012/21,3/8,06/66,3/4-1
                      585           PSPW    1,3
01244  00213660                     VFD     012/21,3/8,06/66,3/4-1
                      586           PSPW    1,4
01245  00214660                     VFD     012/21,3/8,06/66,3/4-1
                      587           PSPW    1,5
01246  00215660                     VFD     012/21,3/8,06/66,3/4-1
                      588           PSPW    1,6
01247  00216660                     VFD     012/21,3/8,06/66,3/4-1
                      589           PSPW    1,7
01250  00217660                     VFD     012/21,3/8,06/66,3/4-1
01251  C 00 01256     590    SPMSG  PZE     SPO
01252  45461262       591    OSPACE BCI     4,NO SPACE
01253  47212325
01254  12121212
01255  12121212
01256  2 00 01256     592    SPO    PZE     OSPACE+4,2
01257  62314527       593    1SPACE BCI     4,SINGLE SPACE
01260  43251262
01261  47212325
01262  12121212
01263  2 00 01263     594    SP1    PZE     1SPACE+4,2
01264  24466422       595    2SPACE BCI     4,DOUBLE SPACE
```

```
01265  43251262
01266  47212325
01267  12121212
01270  2 00 01270    596   SP2     PZE     2SPACE+4,2
01271  63513147     597   3SPACE  BCI     4,TRIPLE SPACE
01272  43251262
01273  47212325
01274  12121212
01275  2 00 01275    598   SP3     PZE     3SPACE+4,2
01276  62472123     599   4SPACE  BCI     4,SPACE 4 LINES
01277  25120412
01300  43314525
01301  62121212
01302  2 00 01302    600   SP4     PZE     4SPACE+4,2
01303  62472123     601   5SPACE  BCI     4,SPACE 5 LINES
01304  25120512
01305  43314525
01306  62121212
01307  2 00 01307    602   SP5     PZE     5SPACE+4,2
01310  62472123     603   6SPACE  BCI     4,SPACE 6 LINES
01311  25120612
01312  43314525
01313  62121212
01314  2 00 01314    604   SP6     PZE     6SPACE+4,2
01315  62472123     605   7SPACE  BCI     4,SPACE 7 LINES
01316  25120712
01317  43314525
01320  62121212
01321  2 00 01321    606   SP7     PZE     7SPACE+4,2
01322  45466312     607   CHA7FM  BCI     5,NOT AT CHANNEL SEVEN
01323  21631223
01324  30214545
01325  25431262
01326  25652545
01327  2 00 01327    608   CHA7F   PZE     CHA7FM+5,2
01330  23302145     609   CHA7TM  BCI     5,CHANNEL SEVEN TRUE
01331  45254312
01332  62256525
01333  45126351
```

```
01334  64251212
01335  2 00 01335     610   CHA7T  PZE     CHA7TM+5,2
01336  12121212       611   CH7TM  BCI     12,                    CHANNEL SEVEN ALSO TRUE
01337  12121212
01340  12121212
01341  12121212
01342  12121212
01343  12121212
01344  23302145
01345  45254312
01346  62256525
01347  45122143
01350  62461263
01351  51642512
01352  2 00 01352     612   CH7T   PZE     CH7TM+12,2
            00000     613   0      B00L    0
            00001     614   1      B00L    1
            00002     615   2      B00L    2
            00003     616   3      B00L    3
            00004     617   4      B00L    4
            00005     618   5      B00L    5
            00006     619   6      B00L    6
            00007     620   7      B00L    7
01353  12600001       621   PRINT1 0CT     12600001
01354  02030405       622          0CT     02030405
01355  06071011       623          0CT     06071011
01356  20403373       624          0CT     20403373
01357  54212223       625          0CT     54212223
01360  24252627       626          BCI     5,DEFGHIJKLMN0PQRSTUVW
01361  30314142
01362  43444546
01363  47505162
01364  63646566
01365  67707113       627          0CT     67707113
01366  14743461       628          0CT     14743461
01367  16365615       629          0CT     16365615
01370  53325535       630          0CT     53325535
01371  52175776       631          0CT     52175776
01372  75723777       632          0CT     75723777
```

```
01373  12600001      633          OCT      12600001
01374  02030405      634          OCT      02030405
01375  06071011      635          OCT      06071011
01376  20403373      636          OCT      20403373
01377  54212223      637          OCT      54212223
01400  24252627      638          BCI      5,DEFGHIJKLMNOPQRSTUVW
01401  30314142
01402  43444546
01403  47505162
01404  63646566
01405  67707113      639          OCT      67707113
01406  14743461      640          OCT      14743461
01407  16365615      641          OCT      16365615
01410  53325535      642          OCT      53325535
01411  52175776      643          OCT      52175776
01412  75723777      644          OCT      75723777
01413  12600001      645          OCT      12600001
01414  02030405      646          OCT      02030405
01415  06071011      647          OCT      06071011
01416  20403373      648          OCT      20403373
01417  54212223      649          OCT      54212223
01420  24252627      650          BCI      5,DEFGHIJKLMNOPQRSTUVW
01421  30314142
01422  43444546
01423  47505162
01424  63646566
01425  67707113      651          OCT      67707113
01426  14743461      652          OCT      14743461
01427  16365615      653          OCT      16365615
01430  53325535      654          OCT      53325535
01431  52175776      655          OCT      52175776
01432  75723777      656          OCT      75723777
01433  12600001      657          OCT      12600001
01434  02030405      658          OCT      02030405
01435  06071011      659          OCT      06071011
01436  20403373      660          OCT      20403373
01437  54212223      661          OCT      54212223
01440  24252627      662          BCI      5,DEFGHIJKLMNOPQRSTUVW
01441  30314142
```

```
01442  43444546
01443  47505162
01444  63646566
01445  67707113     663          ØCT     67707113
01446  14743461     664          ØCT     14743461
01447  16365615     665          ØCT     16365615
01450  53325535     666          ØCT     53325535
01451  52175776     667          ØCT     52175776
01452  75723777     668          ØCT     75723777
01453  12600001     669          ØCT     12600001
01454  02030405     670          ØCT     02030405
01455  60000102     671   PRINT2 ØCT     60000102
01456  03040506     672          ØCT     03040506
01457  07101120     673          ØCT     07101120
01460  40337354     674          ØCT     40337354
01461  21222324     675          BCI     6,ABCDEFGHIJKLMNØPQRSTUVWX
01462  25262730
01463  31414243
01464  44454647
01465  50516263
01466  64656667
01467  70711314     676          ØCT     70711314
01470  74346116     677          ØCT     74346116
01471  36561553     678          ØCT     36561553
01472  32553552     679          ØCT     32553552
01473  17577675     680          ØCT     17577675
01474  72377712     681          ØCT     72377712
01475  60000102     682          ØCT     60000102
01476  03040506     683          ØCT     03040506
01477  07101120     684          ØCT     07101120
01500  40337354     685          ØCT     40337354
01501  21222324     686          BCI     6,ABCDEFGHIJKLMNØPQRSTUVWX
01502  25262730
01503  31414243
01504  44454647
01505  50516263
01506  64656667
01507  70711314     687          ØCT     70711314
01510  74346116     688          ØCT     74346116
```

```
01511  36561553          689              OCT     36561553
01512  32553552          690              OCT     32553552
01513  17577675          691              OCT     17577675
01514  72377712          692              OCT     72377712
01515  60000102          693              OCT     60000102
01516  03040506          694              OCT     03040506
01517  07101120          695              OCT     07101120
01520  40337354          696              OCT     40337354
01521  21222324          697              BCI     6,ABCDEFGHIJKLMNOPQRSTUVWX
01522  25262730
01523  31414243
01524  44454647
01525  50516263
01526  64656667
01527  70711314          698              OCT     70711314
01530  74346116          699              OCT     74346116
01531  36561553          700              OCT     36561553
01532  32553552          701              OCT     32553552
01533  17577675          702              OCT     17577675
01534  72377712          703              OCT     72377712
01535  60000102          704              OCT     60000102
01536  03040506          705              OCT     03040506
01537  07101120          706              OCT     07101120
01540  40337354          707              OCT     40337354
01541  21222324          708              BCI     6,ABCDEFGHIJKLMNOPQRSTUVWX
01542  25262730
01543  31414243
01544  44454647
01545  50516263
01546  64656667
01547  70711314          709              OCT     70711314
01550  74346116          710              OCT     74346116
01551  36561553          711              OCT     36561553
01552  32553552          712              OCT     32553552
01553  17577675          713              OCT     17577675
01554  72377712          714              OCT     72377712
01555  60000102          715              OCT     60000102
01556  03040506          716              OCT     03040506
01557  00010203          717    PRINT3    BCI     2,01234567
```

```
01560  C4050607
01561  10112040        718          OCT      10112040
01562  33735421        719          OCT      33735421
01563  22232425        720          BCI      6,BCDEFGHIJKLMNOPQRSTUVWXY
01564  26273031
01565  41424344
01566  45464750
01567  51526364
01570  65666770
01571  71131474        721          OCT      71131474
01572  34611636        722          OCT      34611636
01573  56155332        723          OCT      56155332
01574  55355217        724          OCT      55355217
01575  57767572        725          OCT      57767572
01576  37771260        726          OCT      37771260
01577  C0010203        727          BCI      2,01234567
01600  C4050607
01601  10112040        728          OCT      10112040
01602  33735421        729          OCT      33735421
01603  22232425        730          BCI      6,BCDEFGHIJKLMNOPQRSTUVWXY
01604  26273031
01605  41424344
01606  45464750
01607  51526364
01610  65666770
01611  71131474        731          OCT      71131474
01612  34611636        732          OCT      34611636
01613  56155332        733          OCT      56155332
01614  55355217        734          OCT      55355217
01615  57767572        735          OCT      57767572
01616  37771260        736          OCT      37771260
01617  C0010203        737          BCI      2,01234567
01620  C4050607
01621  10112040        738          OCT      10112040
01622  33735421        739          OCT      33735421
01623  22232425        740          BCI      6,BCDEFGHIJKLMNOPQRSTUVWXY
01624  26273031
01625  41424344
01626  45464750
```

```
01627  51626364
01630  65666770
01631  71131474     741          OCT     71131474
01632  34611636     742          OCT     34611636
01633  56155332     743          OCT     56155332
01634  55355217     744          OCT     55355217
01635  57767572     745          OCT     57767572
01636  37771260     746          OCT     37771260
01637  00010203     747          BCI     2.01234567
01640  04050607
01641  10112040     748          OCT     10112040
01642  33735421     749          OCT     33735421
01643  22232425     750          BCI     6.BCDEFGHIJKLMNOPQRSTUVWXYZ
01644  26273031
01645  41424344
01646  45464750
01647  51626364
01650  65666770
01651  71131474     751          OCT     71131474
01652  34611636     752          OCT     34611636
01653  56155332     753          OCT     56155332
01654  55355217     754          OCT     55355217
01655  57767572     755          OCT     57767572
01656  37771260     756          OCT     37771260
01657  00010203     757          BCI     2.01234567
01660  04050607
01661  01020304     758   PRINT4 BCI     2.12345678
01662  05060710
01663  11204033     759          OCT     11204033
01664  73542122     760          OCT     73542122
01665  23242526     761          BCI     6.CDEFGHIJKLMNOPQRSTUVWXYZ
01666  27303141
01667  42434445
01670  46475051
01671  62636465
01672  66677071
01673  13147434     762          OCT     13147434
01674  61163656     763          OCT     61163656
01675  15533255     764          OCT     15533255
```

```
01676  35521757  765  OCT  35521757
01677  76757237  766  OCT  76757237
01700  77126000  767  OCT  77126000
01701  01020304  768  BCI  2.12345678
01702  05060710
01703  11204033  769  OCT  11204033
01704  73542122  770  OCT  73542122
01705  23242526  771  BCI  6.CDEFGHIJKLMNOPQRSTUVWXYZ
01706  27303141
01707  42434445
01710  46475051
01711  62636465
01712  66677071
01713  13147434  772  OCT  13147434
01714  61163656  773  OCT  61163656
01715  15533255  774  OCT  15533255
01716  35521757  775  OCT  35521757
01717  76757237  776  OCT  76757237
01720  77126000  777  OCT  77126000
01721  01020304  778  BCI  2.12345678
01722  05060710
01723  11204033  779  OCT  11204033
01724  73542122  780  OCT  73542122
01725  23242526  781  BCI  6.CDEFGHIJKLMNOPQRSTUVWXYZ
01726  27303141
01727  42434445
01730  46475051
01731  62636465
01732  66677071
01733  13147434  782  OCT  13147434
01734  61163656  783  OCT  61163656
01735  15533255  784  OCT  15533255
01736  35521757  785  OCT  35521757
01737  76757237  786  OCT  76757237
01740  77126000  787  OCT  77126000
01741  01020304  788  BCI  2.12345678
01742  05060710
01743  11204033  789  OCT  11204033
01744  73542122  790  OCT  73542122
```

01745	23242526	791		BCI	6.CDEFGHIJKLMNOPQRSTUVWXYZ
01746	27303141				
01747	42434445				
01750	46475051				
01751	62636465				
01752	66677071				
01753	13147434	792		OCT	13147434
01754	61163656	793		OCT	61163656
01755	15533255	794		OCT	15533255
01756	35521757	795		OCT	35521757
01757	76757237	796		OCT	76757237
01760	77126000	797		OCT	77126000
01761	01020304	798		BCI	2.12345678
01762	05060710				
01763	12121212	799	PRINTS	OCT	12121212
01764	25252525	800		OCT	25252525
01765	71717171	801		OCT	71717171
01766	77777777	802		OCT	77777777
01767	24242424	803		OCT	24242424
01770	70707070	804		OCT	70707070
01771	37373737	805		OCT	37373737
01772	23232323	806		OCT	23232323
01773	67676767	807		OCT	67676767
01774	72727272	808		OCT	72727272
01775	22222222	809		OCT	22222222
01776	66666666	810		OCT	66666666
01777	75757575	811		OCT	75757575
02000	21212121	812		OCT	21212121
02001	65656565	813		OCT	65656565
02002	76767676	814		OCT	76767676
02003	54545454	815		OCT	54545454
02004	64646464	816		OCT	64646464
02005	57575757	817		OCT	57575757
02006	73737373	818		OCT	73737373
02007	63636363	819		OCT	63636363
02010	17171717	820		OCT	17171717
02011	33333333	821		OCT	33333333
02012	62626262	822		OCT	62626262
02013	52525252	823		OCT	52525252

02014	40404040	824	8CT	40404040
02015	51515151	825	8CT	51515151
02016	35353535	826	8CT	35353535
02017	20202020	827	8CT	20202020
02020	50505050	828	8CT	50505050
02021	55555555	829	8CT	55555555
02022	11111111	830	8CT	11111111
02023	47474747	831	8CT	47474747
02024	32323232	832	8CT	32323232
02025	10101010	833	8CT	10101010
02026	46464646	834	8CT	46464646
02027	53535353	835	8CT	53535353
02030	07070707	836	8CT	07070707
02031	45454545	837	8CT	45454545
02032	15151515	838	8CT	15151515
02033	06060606	839	8CT	06060606
02034	44444444	840	8CT	44444444
02035	56565656	841	8CT	56565656
02036	05050505	842	8CT	05050505
02037	43434343	843	8CT	43434343
02040	36363636	844	8CT	36363636
02041	04040404	845	8CT	04040404
02042	42424242	846	8CT	42424242
02043	16161616	847	8CT	16161616
02044	03030303	848	8CT	03030303
02045	41414141	849	8CT	41414141
02046	61616161	850	8CT	61616161
02047	02020202	851	8CT	02020202
02050	31313131	852	8CT	31313131
02051	34343434	853	8CT	34343434
02052	01010101	854	8CT	01010101
02053	30303030	855	8CT	30303030
02054	74747474	856	8CT	74747474
02055	00000000	857	8CT	00000000
02056	27272727	858	8CT	27272727
02057	14141414	859	8CT	14141414
02060	60606060	860	8CT	60606060
02061	26262626	861	8CT	26262626
02062	13131313	862	8CT	13131313

```
02063  54121212        863   MSG     BCI     12.*
02064  12121212
02065  12121212
02066  12121212
02067  12121212
02070  12121212
02071  12121212
02072  12121212
02073  12121212
02074  12121212
02075  12121212
02076  12121212
02077  54541212        864           BCI     11.** SDS BUFFERED ON-LINE PRINTER TESTER  **
02100  62246212
02101  22642626
02102  25512524
02103  12464540
02104  43314525
02105  12475131
02106  45632561
02107  12632562
02110  63256112
02111  12545412
02112        00011     865   TEMPCT  BSS     9
02123        00002     865   TEMP    BSS     2
02125  54121212        867   MSG4    BCI     9.*       THE FOLLOWING TEST WILL PRIN
02126  12121212
02127  63302512
02130  26464343
02131  46663145
02132  27126325
02133  52631266
02134  31434312
02135  47513145
02136  63122565        868           BCI     9.T EVERY CHARACTER IN EVERY POSITION.
02137  25517012
02140  23302151
02141  21236325
02142  51123145
```

```
02143   12256525
02144   51701247
02145   46623163
02146   31464533
02147   54121212        869     MSG5    BCI     5,*         CHANNEL TESTS
02150   12121223
02151   30214545
02152   25431263
02153   25626362
02154   25122512        870     MSG6    OCT     25122512
02155   12251225        871     MSG7    OCT     12251225
02156   54121212        872     MSG8    BCI     11,*        THE FOLLOWING TEST WILL CHECK VERTIC
02157   12121212
02160   63302512
02161   26464343
02162   46663145
02163   27126325
02164   62631266
02165   31434312
02166   23302523
02167   42126525
02170   51633123
02171   21431221        873             BCI     7,AL AND HORIZONTAL CONTROL.
02172   45241230
02173   46513171
02174   46456321
02175   43122346
02176   45635146
02177   43331212
02200   54121212        874     MSG9    BCI     11,*        THE FOLLOWING TEST WILL CHECK MAXIMU
02201   12121212
02202   63302512
02203   26464343
02204   46663145
02205   27126325
02206   62631266
02207   31434312
02210   23302523
02211   42124421
```

```
02212  67314464
02213  44126247      875            BCI     7.M SPEED OF PRINTER LISTING.
02214  25252412
02215  46261247
02216  51314563
02217  25511243
02220  31626331
02221  45273312
02222  54121212      876   MSG10    BCI     6.*       PAPER SPACE TESTS
02223  12121247
02224  21472551
02225  12624721
02226  23251263
02227  25626362
02230  C 00 02250    877   LIST1    PZE     CLIST1              4 WORD MESSAGES
02231  C 00 02254    878            PZE     CLIST2
02232  C 00 02260    879            PZE     CLIST3
02233  C 00 02264    880            PZE     CLIST4
02234  C 00 02270    881            PZE     CLIST5
02235  C 00 02274    882            PZE     CLIST6
02236  C 00 02300    883            PZE     CLIST7
02237  C 00 02304    884            PZE     CLIST8
02240        00010   885   CHATIT   BSS     8
02250  12122330      886   CLIST1   BCI     4,  CHANNEL 0 TEST
02251  21454525
02252  43120012
02253  63256263
02254  12122330      887   CLIST2   BCI     4,  CHANNEL 1 TEST
02255  21454525
02256  43120112
02257  63256263
02260  12122330      888   CLIST3   BCI     4,  CHANNEL 2 TEST
02261  21454525
02262  43120212
02263  63256263
02264  12122330      889   CLIST4   BCI     4,  CHANNEL 3 TEST
02265  21454525
02266  43120312
02267  63256263
```

```
02270  12122330      890   CLIST5 BCI     4.  CHANNEL 4 TEST
02271  21454525
02272  43120412
02273  63256263
02274  12122330      891   CLIST6 BCI     4.  CHANNEL 5 TEST
02275  21454525
02276  43120512
02277  63256263
02300  12122330      892   CLIST7 BCI     4.  CHANNEL 6 TEST
02301  21454525
02302  43120612
02303  63256263
02304  12122330      893   CLIST8 BCI     4.  CHANNEL 7 TEST
02305  21454525
02306  43120712
02307  63256263
02310  47513145      894   PFML   BCI     4.PRINTER FAULT
02311  63255112
02312  26216443
02313  63121212
02314  2 00 02314    895   PFM    PZE     PFML+4.2
02315  62304664      896   CHAML  BCI     6.SHOULD BE AT TOP OF FORM
02316  43241222
02317  25122163
02320  12634647
02321  12462612
02322  26465144
02323  2 00 02323    897   CHAM   PZE     CHAML+6.2
```

```
                                 PAGE
                         REDUCE  PSPD    10000000
02324  0 35 01176                STA     A
02325  0 76 40000                LDA*    0
02326  0 54 02336                SUB     =1
02327  0 35 40000                STA*    0
02330  0 76 01176                LDA     A
02331  0 53 40000                SKN*    0
02332  0 51 00000                BRR     0
02333  0 61 00000                MIN     0
02334  0 51 00000                BRR     0
                                 LOAD
            00150                END     BP00-2
02335  00100150
02336  00000001
```

0SPACE	01252	1SPACE	01257	2SPACE	01264	3SPACE	01271
4SPACE	01276	5SPACE	01303	6SPACE	01310	7SPACE	01315
CHA7FM	01322	CHA7TM	01330	CHATIT	02240	CLIST1	02250
CLIST2	02254	CLIST3	02260	CLIST4	02264	CLIST5	02270
CLIST6	02274	CLIST7	02300	CLIST8	02304	COUNT1	01175
MSPACE	01227	OPMIN1	01237	OUTPT1	01236	OUTPUT	01234
PRINT1	01353	PRINT2	01455	PRINT3	01557	PRINT4	01661
PRINTS	01763	PSPACE	01241	REDUCE	02324	TEMPCT	02112
BP02A	00210	BP02M	00215	BP02R	00255	BP19A	00642
BP19B	00655	BP19C	00662	BP19D	00700	BP19E	00722
BP19F	00741	BP19G	00760	CH7TM	01336	CHA7F	01327
CHA7T	01335	CHANL	02315	ERROR	01141	LIST1	02230
MSG10	02222	OPMIN	01235	SPACE	01240	SPMSG	01251
TITLE	01200	BP00	00152	BP01	00163	BP02	00177
BP03	00277	BP04	00316	BP10	00327	BP11	00334
BP12	00355	BP13	00376	BP14	00421	BP15	00444
BP16	00467	BP17	00512	BP18	00535	BP19	00560
BP20	01004	BP21	01011	BP22	01027	BP30	01067
BP31	01074	BP32	01115	C131	01165	CH7T	01352
CHAM	02323	CHAR	01177	DATA	01230	LIST	01206
MSG4	02125	MSG5	02147	MSG6	02154	MSG7	02155
MSG8	02156	MSG9	02200	PFML	02310	TEMP	02123
C17	01157	C20	01160	C21	01161	C22	01162
C32	01163	C63	01164	CR4	01165	M12	01172
M16	01173	M33	01174	MSG	02063	PFM	02314
SP0	01256	SP1	01263	SP2	01270	SP3	01275
SP4	01302	SP5	01307	SP6	01314	SP7	01321
C3	01153	C4	01154	C5	01155	C7	01156
K1	01221	K2	01225	M4	01167	M5	01170
M6	01171	0	00000	1	00001	2	00002
3	00003	4	00004	5	00005	6	00006
7	00007	A	01176				

IDENTIFICATION: 42 KC Magnetic Tape Test

AUTHOR: A. W. England, SDS

ACCEPTED: 13 May 1963

COMPUTER CONFIGURATION: All SDS 920 systems and any 910 with a typewriter which have one or more magnetic tape units connected to the W buffer.

PURPOSE: To provide a simple and easy means for initial checkout and testing of 42 KC magnetic tape units.

PROGRAMMED OPERATORS: None.

STORAGE: The program occupies 587 words from 400_8 to 1512_8. It uses the HELP Word Output Subroutine located at 200_8. The area from the end of the program to the end of memory may be used as input and interlaced output record image.

TIMING: The program is sufficiently fast to keep the tape operating at full speed for all operations.

USE:

1.0 LOADING

To load the program, insert the paper tape in the paper tape reader and follow the normal FILL procedure. When it is loaded, the light on the typewriter will indicate that the program is now under operator control.

1.1 REGAINING OPERATOR CONTROL

If at anytime the operator should lose control of the program he may return it to the keyboard mode by moving the RUN-IDLE-STEP switch to IDLE, pressing START, moving the switch to STEP and then to RUN. If for some reason location 0001 is destroyed he may execute a BRU to location 400 to return control to the keyboard.

2.0 CONTROL FUNCTIONS

The following list contains a call letter for the various control functions the program will perform. These may be typed anytime the light on the typewriter is lit.

USE: (cont.) 2.1 PARAMETER CONTROL

These functions cause the program to set up the various parameters for the tests which will follow.

2.1.1 P, Set Pattern

The previously typed 8 octal digits are set up as the pattern for writing operations.

2.1.2 L, Set Record Length

The previously typed octal number will be established as the record length for all subsequent test operations. For write operations it determines the number of words to be written. For read it determines the maximum number of words which will be stored in memory. The maximum length record is 7777_8 (4095). If a larger number is entered it will be reduced to this maximum.

2.1.3 U, Set Unit Number

The previously typed octal digit is used to identify the logical tape unit number which is to be tested. The program adjusts all tape unit addressing instructions accordingly.

2.1.4 C, Set Record Count

The record counter is incremented by one every time the program passes a record in the forward direction, and decremented by one for the reverse direction. After a rewind it is cleared to zero. This control function with the letter C is provided so that the user can reset this counter whenever he wishes to start a series of operations for which a count is needed. The previously typed 8 octal digits will be saved as the new record count.

2.1.5 Z, Set Parity

If the preceding digit is even the program converts all read and write EOM's to the BCD even parity mode. If the digit is odd it converts all read and write EOM's to the binary odd parity mode.

2.2 TAPE OPERATION CONTROL

2.2.1 Breakpoint Functions

Breakpoints 1, 2 and 4 apply generally to all tape operations. Breakpoint 3 is used when writing.

USE: (cont.)

BP 1 RESET: Continuous operation. The operation will continue as long as this Breakpoint is RESET or until the end of tape is reached.

SET: Stop continuous operation. If initially SET do only one operation.

BP 2 RESET: Perform all operations without stopping between records.

SET: Stop after each record.

BP 3 RESET: Write normally.

SET: Write a continuous record as long as this Breakpoint is set.

BP 4 RESET: Stop if a read or write error occurs.

SET: Do not stop on a read or write error.

2.2.2 W, Write

The previously set pattern will be written as a record of length indicated by the L function. Records will be continuously written as long as Breakpoint 1 is RESET. If Breakpoint 3 is SET one long continuous record will be written. If Breakpoint 4 is RESET and a write error occurs, the program will halt and print WRITE ERROR. If Breakpoint 4 is SET the error will not cause a stop. If the tape is situated on the end of tape marker the write routine will write a Tape Mark to signify end of file, then type END OF REEL, and return to keyboard.

2.2.3 I, Write with Identification

This function is the same as Write except that the record count number is written as the first word of the record. This provides a unique identification word for each record. The record count word is inserted as the first word of the image so no additional words are added to the record.

2.2.4 R, Read

The next record on the selected tape unit will be read into memory. If the record is longer than the preset record length, the program will skip the extra words. If the skip remainder of record operation is not functioning and additional I1 interrupts occur, the program will count these and print the count at the end

USE: (cont.) of the record. As long as Breakpoint 1 is RESET the program will read records sequentially until an end of file or the end of tape is encountered. If Breakpoint 2 is SET, the program will stop the tape after each record; otherwise the tape will run without stopping.

If a read error occurs and Breakpoint 4 is RESET, the program will stop and type READ ERROR. If BP 4 is SET, the program continues.

2.2.5 B, Backspace

If the input number previous to the B is cleared to zero by a carriage return then the selected tape is backspaced one record at a time as long as Breakpoint 1 is RESET or until the load point or an end of file is encountered. If the input number previous to the B is non zero then it is decremented by one after each backspaced record and the backspacing operation is terminated when it reached zero. The counted backspace may also be stopped on Breakpoint 1, the load point, or an end of file. If Breakpoint 2 is reset, the spacing will proceed without stopping between records. If Breakpoint 2 is set, the tape will be stopped after each record spaced and then restarted to continue over the next one.

2.2.6 S, Space Forward

Space forward is the same as backspace except that it will also stop when the end of tape is reached.

2.2.7 X, Search-Forward

The selected tape is searched forward using the read-scan mode until a record is found whose first word is equal to the previously typed octal number. When the record is found it is read into memory. If an end of file or the end of tape is encountered before the record is found the tape is stopped.

2.2.8 Y, Search Reverse

The selected tape is scanned backward until a record is found whose first word (last word scanned over in reverse) is equal to the previously typed octal number. If an end of file or the load point is encountered before the record is found, the tape is stopped.

2.2.9 D, Rewind

The selected tape is started in a rewind and the program returns to keyboard control.

USE: (cont.)

2.2.10 E, Erase

This function is similar to write except that instead of writing information, it erases tape for a distance equal to the specified record length.

2.2.11 F, Write End of File

A tape mark is written on tape to indicate End of File. The record counter is not incremented by the operation. The operation may be executed even though the tape is on the end of tape conductive leader.

2.3 OUTPUT CONTROL

After the tape has been read or moved by some other operation, the results may be inspected using the following control characters.

2.3.1 N, Tape Record Count Number

The program will type the current contents of the record counter.

2.3.2 T, Type Record Read

If the number of words read was less than or equal to the preset length, the program will type: RECORD LENGTH < OR = LLLL, where LLLL represents the record length. If the number of words read exceeds the present record length, the program will type: RECORD LENGTH > LLLL.

After typing one of these messages the program will begin to type the record image in octal numbering each eighth word in octal. This output will continue until either Breakpoint 1 is SET or until the entire record is typed.

If Breakpoint 1 is SET when the T key is struck only the record length will be typed.

3.0 STATUS AND ERROR MESSAGES

The following messages will be typed by the program to inform the operator of the status of the tape operation:

USE: (cont.) 3.1 WRITE ERROR

This indicates that the program detected a write error and Breakpoint 4 was RESET. The tape is stopped and the program returns to keyboard control after typing.

3.2 READ ERROR

This indicates that the program detected a read error and Breakpoint 4 was RESET. The tape is stopped and the program returns to keyboard control after typing.

3.3 SKIP REMAINDER OF RECORD ERRORS: nnnnnnnn

This indicates that the record read was longer than the preset record length and that when the program attempted to ignore the remainder of the record, it still received I1 interrupts. The number of interrupts is indicated by the octal number nnnnnnnn. Control returns to the keyboard after typing. This error stop may not be disabled by Breakpoint 4.

3.4 FILE PROTECT ON

This is typed whenever the user asks for a write or erase operation on a tape which has the file protect ring removed. After typing the program returns to keyboard control.

3.5 END OF REEL

This indicates that a forward operation has reached the end of tape.

3.6 LOAD POINT

This indicates that a reverse operation has reached the beginning of tape.

3.7 TAPE MARK

This indicates that a read, scan, or space operation has encountered an End of File record as indicated by the reading of a Tape Mark.

4.0 FUNCTION SUMMARY

In the calling sequence the small letter d is used to denote an octal digit.

USE: (cont.) 4. FUNCTION SUMMARY (cont.)

Function Description		
Clear digit accumulator		Carriage Return
Set test pattern word		ddddddddP
Set record length		ddddL
Set logical tape unit number		dU
Set record count number		ddddddddC
Set to even parity (BCD)		ϕZ
Set to odd parity (Binary)		1Z
Write		W
Write with record count ID		I
Read		R
Backspace		B
Backspace by count	(octal count)	B
Space forward		S
Space forward by count	(octal count)	S
Search forward and read		ddddddddX
Search reverse		ddddddddY
Rewind		D
Erase		E
Write end of file		F
Type record count number		N
Type record read		T

METHOD:

Each functional routine is essentially independent of the others and attempts to accomplish its operation in as straight forward a manner as possible. The program attempts to prevent the tape from running off the reels in either direction. By using the write end of file operation, sections of the tape can be set off for further test without having to work from the beginning of the reel on every pass.

At the start of every routine, the status of the tape is tested and if the operation obviously cannot be accomplished the program does not attempt it. No reverse operation will be started if the tape is at the load point. No forward operation except write end of file will be started if the tape is on the end of reel marker. No write operation is attempted if the file protect is on.

All reading, spacing and searching operations will be unconditionally terminated when an end of file is encountered.

```
*       910 OR 920. W BUFFER ONLY.
*
*       A. W. ENGLAND.
*
*
00200         00200    WOS     BSS     128             WORD OUTPUT SUBROUTINE
*
00400   0 76  00525    START   LDA     GOCONA          SET CONTROL RESTORE
00401   0 35  00001            STA     1
00402   0 02  00000    CONA    DISW                    KEYBOARD CONTROL ENTRY
00403   0 02  20004            DIR
00404   0 02  02001            RKBW    1,1
00405   0 32  00012    CONA1   WIM     T1
00406   0 75  00012            LDB     T1              SCAN FOR CONTROL CHARACTER
00407   0 66  20011            RCY     9
00410   0 75  00424            LDB     C1
00411   0 71  00425            LDX     C2
00412   2 70  00451            SKM     CTBL+19,2
00413   0 41  00412            BRX     *-1
00414   2 01  40451            BRU*    CTBL+19,2       GO TO CONTROL ROUTINE
*
00415   0 67  20006    DIGIT   LCY     6               ACCUMULATE OCTAL DIGITS
00416   0 75  00016            LDB     ACCUM
00417   0 67  20003            LCY     3
00420   0 36  00016            STB     ACCUM
00421   0 01  00405            BRU     CONA1
*
00422   0 46  30003    CLEAR   CLR                     CLEAR DIGIT ACCUMULATOR
00423   0 01  00420            BRU     DIGIT+3
*
00424   07700000       C1      OCT     7700000
00425   77777755       C2      DEC     -19
```

```
*
*              C0NTR0L R0UTINE LINKAGE TABLE.
*
00426  0 22 00705   CTBL   B       B00
00427  0 23 01203          C       C00
00430  0 24 01107          D       D00
00431  0 25 01131          E       E00
00432  0 26 01163          F       F00
00433  0 31 00452          I       I00
00434  0 43 01206          L       L00
00435  0 45 01371          N       N00
00436  0 47 01200          P       P00
00437  0 51 00556          R       R00
00440  0 62 00732          S       S00
00441  0 63 01271          T       T00
00442  0 64 01234          U       U00
00443  0 66 00453          W       W00
00444  0 67 00770          X       X00
00445  0 70 01051          Y       Y00
00446  0 71 01251          Z       Z00
00447  0 52 00422          CR      CLEAR
00450  0 12 00405          SP      C0NA1
00451  0 00 00415          PZE     DIGIT
```

```
*
*              WRITE ROUTINES.
*
*  WRITE RECORD COUNT AS ID FOR EACH RECORD.
*
00452  0 71 00023   IOO    LDX     ZERO              TO R[SW2]
*
*  WRITE RECORDS OF TEST PATTERN ONLY.
*
00453  0 37 01510   WOO    STX     SW2               S[SW2]
00454  0 76 01500          LDA     PATT              GENERATE PATTERN
00455  0 71 01503          LDX     NEGLEN            IN RECORD IMAGE
00456  0 35 41512          STA*    ENDIMG
00457  0 41 00456          BRX     *-1
00460  0 43 01120   CONB   BRM     TRSUBR            TAPE READY
00461  0 23 01477          EXU     ETT               ON END OF TAPE
00462  0 01 01163          BRU     FOO               YES. WRITE TAPE MARK
00463  0 23 01475          EXU     FPT               NO. IS FILE PROTECT ON
00464  0 01 01160          BRU     CONU              YES
00465  0 23 01476          EXU     BTT               ON BEGINNING OF TAPE
00466  0 43 00541          BRM     ERASE             YES. ERASE LEADER
00467  0 40 20100   CONC   BPT     3                 NO. WRITE CONSTANT RECORD
00470  0 01 00526          BRU     W20               YES
00471  0 76 01506          LDA     RC                NO
00472  0 53 01510          SKN     SW2               WRITE WITH ID
00473  0 35 01513          STA     IMAGE             YES
00474  0 02 50000          CIL                       NO. CHECK INTERLACE
00475  0 23 01504          EXU     SHIB              SET HIGH BITS
00476  0 13 01505          POT     LDIL              LOAD INTERLACE
00477  0 23 01463          EXU     WT                START TAPE
00500  0 23 01477   W30    EXU     ETT               END OF TAPE ENCOUNTERED
00501  0 01 00657          BRU     CONE              YES
00502  0 40 12610          TGTW                      NO. GAP
00503  0 01 00505          BRU     *+2               YES
00504  0 01 00500          BRU     *-4               NO
00505  0 61 01506          MIN     RC                COUNT RECORD
00506  0 40 20010          BETW                      WRITE ERROR
00507  0 40 20040          BPT     4                 YES. IS ERROR STOP ALLOWED
00510  0 01 00515          BRU     W10               NO.NO
00511  0 43 01124          BRM     BRSUBR            YES. BUFFER READY
00512  0 76 01427          LDA     EM1LOC            PRINT ERROR MESSAGE
00513  0 71 01460          LDX     MINUS3
00514  0 01 01416          BRU     PRTEM
```

```
*
00515  0 40 20400   W10     BPT     1                 0PERATI0N C0NTINUE
00516  0 01 00524           BRU     C0NZ              N0
00517  0 40 20200           BPT     2                 YES. N0N ST0P
00520  0 01 00522           BRU     *+2               N0
00521  0 01 00467           BRU     C0NC              YES
00522  0 43 01124           BRM     BRSUBR            WAIT F0R ST0P
00523  0 01 00460           BRU     C0NB
*
00524  0 43 01124   C0NZ    BRM     BRSUBR
00525  0 01 00402   G0C0NA  BRU     C0NA
*
*
00526  0 23 01463   W20     EXU     WT                C0NSTANT REC0RD WRITE
00527  0 23 01477           EXU     ETT               END 0F TAPE
00530  0 01 00536           BRU     W21               YES
00531  0 12 01500           MIW     PATT              N0. 0UTPUT PATTERN
00532  0 40 20100           BPT     3                 C0NTINUE
00533  0 01 00527           BRU     *-4               YES
00534  0 02 14000           T0PW                      N0
00535  0 01 00500           BRU     W30               RETURN T0 MAIN L00P
*
00536  0 02 14000   W21     T0PW                      END 0F TAPE ST0P
00537  0 43 01124           BRM     BRSUBR
00540  0 01 01163           BRU     F00               WRITE TAPE MARK
*
*
*  ERASE STARTING LEADER SUBR0UTINE.
*
00541  0 00 00000   ERASE   PZE
00542  0 76 00555           LDA     E555
00543  0 23 01472           EXU     D2T               IS DENSITY 200 BPI
00544  0 76 00554           LDA     E200              YES
00545  0 35 00012           STA     T1                N0
00546  0 02 50000           CIL
00547  0 13 00012           P0T     T1
00550  0 23 01467           EXU     ET                START ERASE
00551  0 40 12610           TGTW                      GAP
00552  0 51 00541           BRR     ERASE             YES.EXIT
00553  0 01 00551           BRU     *-2               N0
*
*
00554  11300000    E200    DEC     15089             STARTING GAP AT 200 BPI
00555  32040000    E555    DEC     41789             STARTING GAP AT 555 BPI
```

```
*
*              READ ROUTINE.
*
00556  0 43 01120   ROO     BRM     TRSUBR          TAPE READY
00557  0 23 01477             EXU     ETT             AT END OF TAPE
00560  0 01 00657             BRU     CONE            YES
00561  0 76 00677             LDA     GORI1           NO. INITIALIZE INTERRUPTS
00562  0 35 00031             STA     I1W
00563  0 76 00700             LDA     GORI2
00564  0 35 00033             STA     I2W
00565  0 02 20002             EIR
00566  0 02 50000   CONS      CIL
00567  0 23 01504             EXU     SHIB            SET HIGH BITS
00570  0 13 01505             POT     LDIL            LOAD INTERLACE
00571  0 76 00026             LDA     ONES
00572  0 35 01507             STA     SW1             S[SW1]
00573  0 23 01464             EXU     RT              START READ
00574  0 23 01477             EXU     ETT             END OF TAPE ENCOUNTERED
00575  0 01 00657             BRU     CONE            YES
00576  0 40 12610             TGTW                    NO. GAP
00577  0 01 00601             BRU     *+2             YES
00600  0 01 00574             BRU     *-4             NO
00601  0 61 01506             MIN     RC              COUNT RECORD
00602  0 53 01507             SKN     SW1             TEST SW1
00603  0 01 00617             BRU     RO1             RESET
00604  0 40 20040   RO2       BPT     4               SET. ERROR STOP PERMITTED
00605  0 01 00610             BRU     *+3             NO
00606  0 40 20010             BETW                    YES. WAS THERE A READ ERROR
00607  0 01 00653             BRU     RO3             YES
00610  0 40 20400             BPT     1               CONTINUING OPERATION
00611  0 01 00524             BRU     CONZ            NO
00612  0 40 20200             BPT     2               YES. STOP BETWEEN RECORDS
00613  0 01 00615             BRU     *+2             YES
00614  0 01 00566             BRU     CONS            NO
00615  0 43 01124             BRM     BRSUBR          WAIT FOR TAPE TO STOP
00616  0 01 00556             BRU     ROO
```

```
*
00617  0 76 01507   RO1    LDA    SW1
00620  0 72 00026          SKA    ONES              [SW1]:ZERO
00621  0 01 00623          BRU    CONF              NOT EQUAL
00622  0 01 00604          BRU    RO2               EQUAL
00623  0 43 01124   CONF   BRM    BRSUBR            WAIT FOR TAPE TO STOP
00624  0 71 01462          LDX    MINUS9            PRINT ERROR MESSAGE
00625  0 02 02641          TYPW   1,4
00626  2 12 00651          MIW    SEM+8,2
00627  0 41 00626          BRX    *-1
00630  0 02 14000          TOPW
00631  0 43 01124          BRM    BRSUBR
00632  0 76 00617          LDA    RO1               SW1 LOCATION
00633  0 75 00651          LDB    RC1
00634  0 71 00652          LDX    RC2
00635  0 02 02041          TYPW   1,1
00636  0 43 00200          BRM    WOS
00637  0 01 01353          BRU    CONJ
*
00640  52121212            OCT    52121212
00641  62423147    SEM     BCI    8,SKIP REMAINDER OF RECORD ERRORS:
*
00651  03777760    RC1     OCT    03777760
00652  0 12 00012  RC2     MIW    T1
*
*
00653  0 43 01124   RO3    BRM    BRSUBR            READ ERROR
00654  0 76 01432   CONY   LDA    EM4LOC
00655  0 71 01460          LDX    MINUS3
00656  0 01 01416          BRU    PRTEM
*
00657  0 02 20004   CONE   DIR                      END OF REEL STOP
00660  0 02 00000          DISW
00661  0 76 01430          LDA    EM2LOC
00662  0 71 01460          LDX    MINUS3
00663  0 01 01416          BRU    PRTEM
```

```
*
00664  0 00 00000   RI1     PZE                READ I1 INTERRUPT
00665  0 02 13610           SRRW               SKIP REMAINDER OF RECORD
00666  0 32 00012           WIM       T1
00667  0 61 01507           MIN       SW1      R[SW1]
00670  0 01 40664           BRU*      RI1      EXIT
*
00671  0 00 00000   RI2     PZE                READ I2 INTERRUPT
00672  0 40 13610           TFTW               END OF FILE
00673  0 01 40675           BRU*      GOCONM   YES
00674  0 01 40676           BRU*      GOR03    NO. ASSUME READ ERROR
*
00675  0 00 00701   GOCONM  PZE       CONM
00676  0 00 00653   GOR03   PZE       R03
*
*
00677  0 43 00664   GORI1   BRM       RI1
00700  0 43 00671   GORI2   BRM       RI2
*
*
*
00701  0 43 01124   CONM    BRM       BRSUBR   TAPE MARK
00702  0 76 01434           LDA       EM6LOC
00703  0 71 01460           LDX       MINUS3
00704  0 01 01416           BRU       PRTEM
```

```
*
*                BACKSPACE
*
00705  0 43 01120   BOO    BRM     TRSUBR      TAPE READY
00706  0 23 01476           EXU     BTT         ON BEGINNING OF TAPE
00707  0 01 00727           BRU     CONL        YES
00710  0 23 01470   BO1     EXU     SR          NO. SCAN REVERSE
00711  0 32 00012           WIM     T1
00712  0 40 21000           BRTW                BUFFER READY
00713  0 01 00716           BRU     *+3         NO
00714  0 23 01476           EXU     BTT         YES. BEGINNING OF TAPE
00715  0 01 00727           BRU     CONL        YES
00716  0 40 13610           TFTW                NO. END OF FILE
00717  0 01 00701           BRU     CONM        YES
00720  0 76 01506           LDA     RC          NO
00721  0 54 00024           SUB     ONE         DECREMENT RECORD COUNT
00722  0 35 01506           STA     RC
00723  0 40 20400           BPT     1           OPERATION CONTINUE
00724  0 01 00524           BRU     CONZ        NO
00725  0 43 00754           BRM     SSSUBR      YES. CHECK SPACE STOP
00726  0 01 00710           BRU     BO1
*
*
00727  0 76 01433   CONL    LDA     EM5LOC      LOAD POINT
00730  0 71 01460           LDX     MINUS3
00731  0 01 01416           BRU     PRTEM
```

```
*
*                SPACE FORWARD SUBROUTINE.
*
00732  0 43 01120   SOO     BRM     TRSUBR      TAPE READY
00733  0 23 01477           EXU     ETT         END OF TAPE
00734  0 01 00657           BRU     CONE        YES
00735  0 23 01465   SO1     EXU     SF          NO. SCAN FORWARD
00736  0 23 01477           EXU     ETT         END OF TAPE
00737  0 01 00657           BRU     CONE        YES
00740  0 40 21000           BRTW                NO. BUFFER READY
00741  0 40 12610           TGTW                NO. GAP
00742  0 01 00744           BRU     *+2         YES. YES
00743  0 01 00736           BRU     *-5         NO
00744  0 32 00012           WIM     T1
00745  0 40 13610           TFTW                END OF FILE
00746  0 01 00701           BRU     CONM        YES
00747  0 61 01506           MIN     RC          NO. COUNT RECORD
00750  0 40 20400           BPT     1           OPERATION CONTINUE
00751  0 01 00524           BRU     CONZ        NO
00752  0 43 00754           BRM     SSSUBR      YES. CHECK STOP
00753  0 01 00735           BRU     SO1
*
*
00754  0 00 00000   SSSUBR  PZE                 SPACE STOP SUBROUTINE
00755  0 76 00016           LDA     ACCUM
00756  0 72 00026           SKA     ONES        ACCUM;ZERO
00757  0 01 00763           BRU     *+4         NOT EQUAL
00760  0 40 20200   CONP    BPT     2           EQUAL. STOP BETWEEN RECORDS
00761  0 43 01124           BRM     BRSUBR      YES
00762  0 51 00754           BRR     SSSUBR      NO. EXIT
00763  0 54 00024           SUB     ONE         DECREMENT RECORD COUNT
00764  0 35 00016           STA     ACCUM
00765  0 72 00026           SKA     ONES        ACCUM;ZERO
00766  0 01 00760           BRU     CONP        NOT EQUAL
00767  0 01 00524           BRU     CONZ        EQUAL
```

```
*
*              SEARCH FORWARD.
*
00770  0 43 01120   XOO    BRM     TRSUBR          TAPE READY
00771  0 23 01477          EXU     ETT             END OF TAPE
00772  0 01 00657          BRU     CONE            YES
00773  0 75 00026          LDB     ONES            NO
00774  0 36 01507          STB     SW1             S[SW 1]
00775  0 76 00677          LDA     GORI1           INITIALIZE INTERRUPT
00776  0 35 00031          STA     I1W
00777  0 76 01050          LDA     GOXI2
01000  0 35 00033          STA     I2W
01001  0 76 00016          LDA     ACCUM
01002  0 02 50000   CONX   CIL                     COCK INTERLACE
01003  0 23 01504          EXU     SHIB            SET HIGH BITS
01004  0 13 01505          POT     LDIL            LOAD INTERLACE
01005  0 23 01464          EXU     RT              START READ
01006  0 32 00012          WIM     T1
01007  0 40 13610          TFTW                    END OF FILE
01010  0 01 00701          BRU     CONM            YES
01011  0 70 00012          SKM     T1              NO. 1ST WORD:ACCUM
01012  0 01 01032          BRU     XO1             NOT EQUAL
01013  0 02 20002          EIR                     EQUAL
01014  0 61 01506          MIN     RC              COUNT RECORD
01015  0 23 01477          EXU     ETT             END OF TAPE
01016  0 01 00657          BRU     CONE            YES
01017  0 40 21000          BRTW                    NO. BUFFER READY
01020  0 01 01015          BRU     *-3             NO
01021  0 53 01507          SKN     SW1             YES. TEST SW1
01022  0 01 01024          BRU     *+2             RESET
01023  0 01 01027          BRU     *+4             SET
01024  0 76 01507          LDA     SW1
01025  0 72 00026          SKA     ONES            [SW 1]:ZERO
01026  0 01 00623          BRU     CONF            NOT EQUAL
01027  0 40 20010          BETW                    EQUAL. BUFFER ERROR
01030  0 01 00654          BRU     CONY            YES
01031  0 01 00402          BRU     CONA            NO
```

```
*
01032  0 02 50000   XO1    CIL                 CLEAR INTERLACE
01033  0 13 00023          POT     ZERO
01034  0 32 00012          WIM     T1
01035  0 02 14000          RTSW                READ TO SCAN
01036  0 61 01506          MIN     RC          COUNT RECORD
01037  0 23 01477          EXU     ETT         END OF TAPE
01040  0 01 00657          BRU     CONE        YES
01041  0 40 12610          TGTW                NO. GAP
01042  0 01 01044          BRU     *+2         YES
01043  0 01 01037          BRU     *-4         NO
01044  0 32 00012          WIM     T1          DUMP LAST WORD
01045  0 01 01002          BRU     CONX
*
01046  0 00 00000   XI2    PZE                 SEARCH I2 INTERRUPT
01047  0 01 41046          BRU*    XI2
*
01050  0 43 01046   GOXI2  BRM     XI2
```

```
*
*              SEARCH REVERSE.
*
01051  0 43 01120   YOO    BRM     TRSUBR          TAPE READY
01052  0 23 01476           EXU     BTT             BEGINNING OF TAPE
01053  0 01 00727           BRU     CONL            YES
01054  0 76 00016           LDA     ACCUM           NO. REVERSE ACCUM
01055  0 75 00016           LDB     ACCUM           1 2 3 4 1 2 3 4
01056  0 67 20006           LCY     6               2 3 4 1 2 3 4 1
01057  0 14 01105           ETR     YC1             00770077
01060  0 35 00012           STA     T1              0 3 0 1
01061  0 76 00016           LDA     ACCUM           1 2 3 4
01062  0 75 00016           LDB     ACCUM           1 2 3 4 1 2 3 4
01063  0 66 20006           RCY     6               4 1 2 3 4 1 2 3
01064  0 14 01106           ETR     YC2             77007700
01065  0 16 00012           MRG     T1              4 3 2 1
01066  0 35 01501           STA     REVPAT
01067  0 23 01470   CONT    EXU     SR              START SCAN REVERSE
01070  0 32 00012           WIM     T1
01071  0 40 13610           TFTW                    END OF FILE
01072  0 01 00701           BRU     CONM            YES
01073  0 23 01476           EXU     BTT             NO. BEGINNING OF TAPE
01074  0 01 00727           BRU     CONL            YES
01075  0 76 01506           LDA     RC              NO
01076  0 54 00024           SUB     ONE             DECREMENT RECORD COUNT
01077  0 35 01506           STA     RC
01100  0 76 00012           LDA     T1
01101  0 75 00026           LDB     ONES
01102  0 70 01501           SKM     REVPAT          1ST WORD:REVERSED ID KEY
01103  0 01 01067           BRU     CONT            NOT EQUAL
01104  0 01 00524           BRU     CONZ            EQUAL
*
*
01105  00770077      YC1     OCT     00770077
01106  77007700      YC2     OCT     77007700
```

```
*
*              REWIND.
*
01107  0 43 01120   DOO    BRM     TRSUBR          TAPE READY
01110  0 23 01476           EXU     BTT             ON BEGINNING OF TAPE
01111  0 01 00727           BRU     CONL            YES
01112  0 23 01471           EXU     REW             NO. START REWIND
01113  0 23 01474           EXU     TRT             TAPE STARTED
01114  0 01 01112           BRU     *-2             NO
01115  0 46 30003           CLR                     YES. CLEAR RECORD COUNT
01116  0 35 01506           STA     RC
01117  0 01 00402           BRU     CONA
*
*
*              TAPE READY SUBROUTINE.
*
01120  0 00 00000   TRSUBR  PZE
01121  0 23 01474           EXU     TRT             TAPE READY
01122  0 51 01120           BRR     TRSUBR          YES.EXIT
01123  0 01 01121           BRU     *-2             NO
*
*
*              BUFFER READY SUBROUTINE.
*
01124  0 00 00000   BRSUBR  PZE
01125  0 02 20004           DIR                     DISABLE INTERRUPT
01126  0 40 21000           BRTW
01127  0 01 01126           BRU     *-1
01130  0 51 01124           BRR     BRSUBR          EXIT
```

```
*
*               ERASE ROUTINE.
*
01131  0 43 01120   EOO    BRM     TRSUBR          TAPE READY
01132  0 23 01477           EXU     ETT             END OF TAPE
01133  0 01 00657           BRU     CONE            YES
01134  0 23 01475           EXU     FPT             NO. FILE PROTECT ON
01135  0 01 01160           BRU     CONU            YES
01136  0 23 01476           EXU     BTT             NO. BEGINNING OF TAPE
01137  0 43 00541           BRM     ERASE           YES. ERASE STARTING LEADER
01140  0 02 50000   CONV    CIL                     NO. SET UP INTERLACE
01141  0 23 01504           EXU     SHIB
01142  0 13 01505           POT     LDIL
01143  0 23 01467           EXU     ET              START ERASE
01144  0 23 01477           EXU     ETT             END OF TAPE
01145  0 01 00657           BRU     CONE            YES
01146  0 40 12610           TGTW                    NO. GAP
01147  0 01 01151           BRU     *+2             YES
01150  0 01 01144           BRU     *-4             NO
01151  0 40 20400           BPT     1               CONTINUE OPERATION
01152  0 01 00524           BRU     CONZ            NO
01153  0 40 20200           BPT     2               YES STOP BETWEEN RECORDS
01154  0 01 01156           BRU     *+2             YES
01155  0 01 01140           BRU     CONV            NO
01156  0 43 01124           BRM     BRSUBR          WAIT FOR TAPE TO STOP
01157  0 01 01131           BRU     EOO
*
*
01160  0 76 01431   CONU    LDA     EM3LOC          FILE PROTECT ON
01161  0 71 01461           LDX     MINUS4
01162  0 01 01416           BRU     PRTEM
```

```
*
*               WRITE END OF FILE [TAPE MARK].
*
01163  0 43 01120   FOO    BRM     TRSUBR          TAPE READY
01164  0 23 01475           EXU     FPT             FILE PROTECT ON
01165  0 01 01160           BRU     CONU            YES
01166  0 23 01476           EXU     BTT             NO. BEGINNING OF TAPE
01167  0 43 00541           BRM     ERASE           YES
01170  0 23 01466           EXU     WEOF            NO
01171  0 12 01177           MIW     TM
01172  0 02 14000           TOPW
01173  0 43 01124           BRM     BRSUBR          WAIT FOR TAPE TO STOP
01174  0 23 01477           EXU     ETT             END OF TAPE
01175  0 01 00657           BRU     CONE            YES
01176  0 01 00402           BRU     CONA            NO
*
01177  17000000      TM     OCT     17000000        TAPE MARK CONSTANT
*
*
*               SET TEST PATTERN.
*
01200  0 76 00016   POO    LDA     ACCUM
01201  0 35 01500           STA     PATT
01202  0 01 00422           BRU     CLEAR
*
*
*               SET RECORD COUNT
*
01203  0 76 00016   COO    LDA     ACCUM
01204  0 35 01506           STA     RC
01205  0 01 00422           BRU     CLEAR
```

```
*
*              SET BLOCK LENGTH.
*
01206  0 76 01232   L00    LDA     LC2             7777
01207  0 73 00016           SKG     ACCUM           IF SPECIFIED LENGTH IS > 4095
01210  0 01 01212           BRU     *+2             USE 4095 AS LENGTH
01211  0 14 00016           ETR     ACCUM
01212  0 35 01502           STA     LENGTH
01213  0 55 01511           ADD     BEGIMG          COMPUTE END OF IMAGE
01214  0 16 01231           MRG     LC1
01215  0 35 01512           STA     ENDIMG
01216  0 46 30003           CLR                     FORM NEGATIVE LENGTH
01217  0 54 01502           SUB     LENGTH
01220  0 35 01503           STA     NEGLEN
01221  0 76 01502           LDA     LENGTH          FORM INTERLACE CONTROL
01222  0 66 00012           RSH     10              WORDS.
01223  0 16 01233           MRG     LC3
01224  0 35 01504           STA     SHIB
01225  0 46 00014           XAB
01226  0 16 01511           MRG     BEGIMG
01227  0 35 01505           STA     LDIL
01230  0 01 00422           BRU     CLEAR
*
*
01231  20000000    LC1     OCT     20000000        INDEX TAG
01232  00007777    LC2     OCT     7777            4095. MAX LENGTH
01233  0 02 10000  LC3     EOM     10000           FOR SHIB
```

```
*
*              SET TAPE UNIT NUMBER.
*
01234  0 76 00016   U00    LDA     ACCUM
01235  0 14 01246          ETR     UC1          SAVE LAST DIGIT
01236  0 35 00012          STA     T1
01237  0 71 01247          LDX     UC2          -LENGTH OF TAPE CONTROL TABLE
01240  2 76 01500          LDA     ETT+1.2      INSERT NEW TAPE UNIT
01241  0 14 01250          ETR     UC3          NUMBER IN TAPE COMMANDS
01242  0 16 00012          MRG     T1
01243  2 35 01500          STA     ETT+1.2
01244  0 41 01240          BRX     *-4
01245  0 01 00422          BRU     CLEAR
*
01246  00000007     UC1    OCT     7
01247  77777763     UC2    DEC     -13
01250  77777770     UC3    OCT     77777770
*
*
*              SET PARITY.
*
01251  0 46 30003   Z00    CLR
01252  0 76 00016          LDA     ACCUM        SAVE LAST BIT
01253  0 14 00024          ETR     ONE
01254  0 67 00011          LSH     9
01255  0 35 00012          STA     T1
01256  0 76 01464          LDA     RT
01257  0 14 01267          ETR     ZC1
01260  0 16 00012          MRG     T1
01261  0 35 01464          STA     RT
01262  0 55 01270          ADD     ZC2
01263  0 35 01465          STA     SF
01264  0 55 01270          ADD     ZC2
01265  0 35 01463          STA     WT
01266  0 01 00422          BRU     CLEAR
*
01267  77776777     ZC1    OCT     77776777
01270  00000020     ZC2    OCT     20
```

```
*
*              TYPE REC0RD READ.
*
01271  0 02 02641   T00    TYPW    1.4              TYPE REC0RD LENGTH
01272  0 12 01361          MIW     CRC              MESSAGE.
01273  0 12 01363          MIW     TRM
01274  0 12 01364          MIW     TRM+1
01275  0 12 01365          MIW     TRM+2
01276  0 53 01507          SKN     SW1
01277  0 01 01303          BRU     *+4
01300  0 12 01366          MIW     TRM+3
01301  0 12 01367          MIW     TRM+4
01302  0 01 01304          BRU     *+2
01303  0 12 01370          MIW     TRM+5
01304  0 02 14000          T0PW
01305  0 43 01124          BRM     BRSUBR
01306  0 02 02041          TYPW    1.1              TYPE REC0RD LENGTH
01307  0 76 01502          LDA     LENGTH
01310  0 67 00014          LSH     12
01311  0 35 00012          STA     T1
01312  0 76 01311          LDA     *-1
01313  0 75 01355          LDB     TC1
01314  0 71 01356          LDX     TC2
01315  0 43 00200          BRM     W0S
01316  0 76 00026          LDA     0NES
01317  0 35 00012          STA     T1
01320  0 76 01511          LDA     BEGIMG
01321  0 35 00013          STA     T2
01322  0 12 01361          MIW     CRC
01323  0 01 01344          BRU     C0NG
```

```
*
01324  0 76 01357   CONH   LDA    TC3
01325  0 72 00012          SKA    T1                  EVEN OCTANT
01326  0 01 01336          BRU    TO1                 NO
01327  0 76 00012          LDA    T1                  YES
01330  0 67 00014          LSH    12
01331  0 35 00014          STA    T3
01332  0 76 01331          LDA    *-1
01333  0 75 01355          LDB    TC1
01334  0 71 01356          LDX    TC2
01335  0 43 00200          BRM    WOS
01336  0 12 01362   TO1    MIW    TAB
01337  0 76 00013          LDA    T2
01340  0 75 01360          LDB    TC4
01341  0 71 01356          LDX    TC2
01342  0 43 00200          BRM    WOS
01343  0 61 00013          MIN    T2                  ADDR + 1 TO ADDR
01344  0 12 01361   CONG   MIW    CRC
01345  0 61 00012          MIN    T1
01346  0 76 00012          LDA    T1
01347  0 73 01502          SKG    LENGTH              DONE
01350  0 40 20400          BPT    1                   NO. STOP
01351  0 01 01353          BRU    CONJ                YES. YES
01352  0 01 01324          BRU    CONH                NO
*
01353  0 02 14000   CONJ   TOPW
01354  0 01 00524          BRU    CONZ
*
*
01355  17740000     TC1    OCT    17740000            RECORD LENGTH FORMAT
01356  0 12 00015   TC2    MIW    T4
01357  00000007     TC3    OCT    7
01360  74747474     TC4    OCT    74747474            IMAGE WORD FORMAT
01361  52521212     CRC    OCT    52521212            CARRIAGE RETURN CONSTANT
01362  72000000     TAB    OCT    72000000            TAB
*
01363  51252346     TRM    BCI    6.RECORD LENGTH < OR =H >
```

```
*
*              TYPE REC0RD C0UNT NUMBER.
*
01371  0 02 02641   N00    TYPW    1.4
01372  0 12 01361          MIW     CRC
01373  0 12 01412          MIW     RCM
01374  0 12 01413          MIW     RCM+1
01375  0 12 01414          MIW     RCM+2
01376  0 12 01415          MIW     RCM+3
01377  0 02 14000          T0PW
01400  0 43 01124          BRM     BRSUBR
01401  0 02 02041          TYPW    1.1
01402  0 76 01410          LDA     NC1
01403  0 75 01411          LDB     NC2
01404  0 71 01356          LDX     TC2
01405  0 43 00200          BRM     W0S
01406  0 12 01361          MIW     CRC
01407  0 01 01353          BRU     C0NJ
*
*
01410  0 00 01506   NC1    PZE     RC                  REL0C
01411  77777400     NC2    0CT     77777400
*
01412  51252346     RCM    BCI     4.REC0RD C0UNT =
```

```
*
*  ERR0R MESSAGE 0UTPUT SUBR0UTINE.
*
01416  0 02 20004   PRTEM  DIR
01417  0 02 02641          TYPW    1,4
01420  0 12 01426          MIW     CRS
01421  0 35 00012          STA     T1
01422  0 12 40012          MIW*    T1
01423  0 61 00012          MIN     T1
01424  0 41 01422          BRX     *-2
01425  0 01 01353          BRU     C0NJ
*
01426  12121252     CRS    0CT     12121252            SP SP SP CR
*
01427  0 00 01435   EM1L0C PZE     EM1
01430  0 00 01440   EM2L0C PZE     EM2
01431  0 00 01443   EM3L0C PZE     EM3
01432  0 00 01447   EM4L0C PZE     EM4
01433  0 00 01452   EM5L0C PZE     EM5
01434  0 00 01455   EM6L0C PZE     EM6
*
01435  12665131     EM1    BCI     3, WRITE ERR0R
01440  12254524     EM2    BCI     3, END 0F REEL
01443  12263143     EM3    BCI     4, FILE PR0TECT 0N
01447  12512521     EM4    BCI     3, READ ERR0R
01452  12434621     EM5    BCI     3, L0AD P0INT
01455  12632147     EM6    BCI     3, TAPE MARK
*
01460  77777775     MINUS3 DEC     -3
01461  77777774     MINUS4 DEC     -4
01462  77777767     MINUS9 DEC     -9
```

```
*
*       CONTROL TABLE FOR ALL MAGNETIC TAPE FUNCTIONS.
*
*
*               BINARY OR BCD SELECTABLE FUNCTIONS.
*
01463  0 02 03650   WT      WTBW     0.4                WRITE TAPE
01464  0 02 03610   RT      RTBW     0.4                READ TAPE
01465  0 02 03630   SF      SFBW     0.4                SCAN FORWARD
*
*               NON SELECTABLE FUNCTIONS
*
01466  0 02 02050   WEOF    WTDW     0.1                WRITE END OF FILE
01467  0 02 03670   ET      ETW      0.4                ERASE TAPE
01470  0 02 07630   SR      SRBW     0.4                SCAN REVERSE
01471  0 02 14010   REW     REWW     0                  REWIND
01472  0 40 16210   D2T     SKS      16210              200 BPI TEST
01473  0 40 16610   D5T     SKS      16610              556 BPI TEST
01474  0 40 10410   TRT     SKS      10410              TAPE READY TEST
01475  0 40 14010   FPT     SKS      14010              FILE PROTECT TEST
01476  0 40 12010   BTT     SKS      12010              BEGINNING OF TAPE TEST
01477  0 40 11010   ETT     SKS      11010              END OF TAPE TEST
*
*
                    RTSW    OPD      214000             READ TO SCAN
                    TGTW    OPD      4012610            TAPE GAP TEST
                    TFTW    OPD      4013610            TAPE END OF FILE TEST
                    SRRW    OPD      213610             SKIP REMAINDER OF RECORD
                    CIL     OPD      250000             COCK INTERLACE
```

```
*
*       C0NTR0L CHARACTER DEFINATI0NS.
*
                    B       0PD     2200000
                    C       0PD     2300000
                    D       0PD     2400000
                    E       0PD     2500000
                    F       0PD     2600000
                    I       0PD     3100000
                    L       0PD     4300000
                    N       0PD     4500000
                    P       0PD     4700000
                    R       0PD     5100000
                    S       0PD     6200000
                    T       0PD     6300000
                    U       0PD     6400000
                    W       0PD     6600000
                    X       0PD     6700000
                    Y       0PD     7000000
                    Z       0PD     7100000
                    CR      0PD     5200000     CARRIAGE RETURN
                    SP      0PD     1200000     SPACE CHARACTER
*
*
          00023     ZER0    B00L    23
          00024     0NE     B00L    24
          00025     MINUS   B00L    25
          00026     0NES    B00L    26
          00027     ADRMSK  B00L    27
          00012     T1      B00L    12
          00013     T2      B00L    13
          00014     T3      B00L    14
          00015     T4      B00L    15
          00016     ACCUM   B00L    16
          00031     I1W     B00L    31
          00033     I2W     B00L    33
```

```
*
*       C0NTR0L ST0RAGE.
*
01500   0 00 00000    PATT    PZE                     PATTERN
01501   0 00 00000    REVPAT  PZE                     REVERSED ACCUM ID PATTERN
01502   0 00 00000    LENGTH  PZE                     REC0RD LENGTH
01503   0 00 00000    NEGLEN  PZE                     NEGATIVE REC0RD LENGTH
01504   0 00 00000    SHIB    PZE                     SET HIGH 0RDER INTERLACE BITS
01505   0 00 00000    LDIL    PZE                     C0NTR0L W0RD T0 L0AD INTERLACE
01506   0 00 00000    RC      PZE                     REC0RD C0UNT
*
01507   0 00 00000    SW1     PZE
01510   0 00 00000    SW2     PZE
*
01511   0 00 01513    BEGIMG  PZE     IMAGE           BEGINNING 0F IMAGE
01512   0 00 11512    ENDIMG  PZE     IMAGE+4095      HIGHEST END 0F IMAGE
01513        07777    IMAGE   BSS     4095
*
             00400            END     START
```

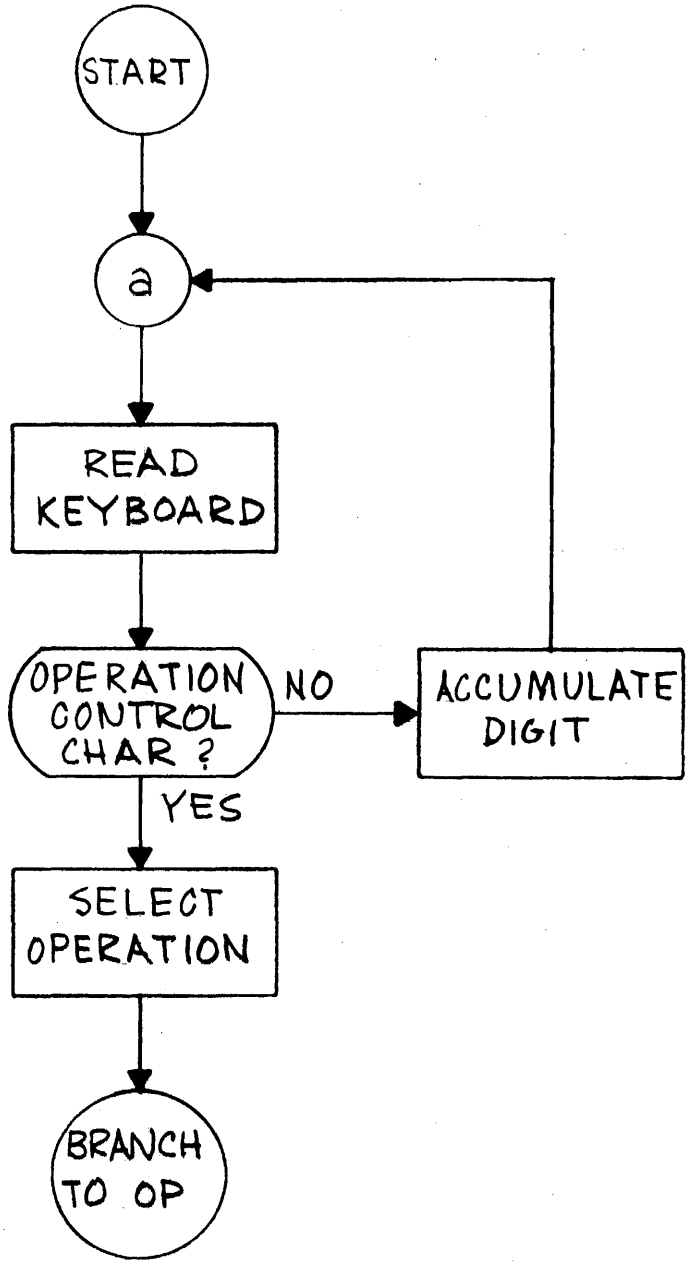
START
a
READ KEYBOARD
OPERATION CONTROL CHAR ?
NO
ACCUMULATE DIGIT
YES
SELECT OPERATION
BRANCH TO OP

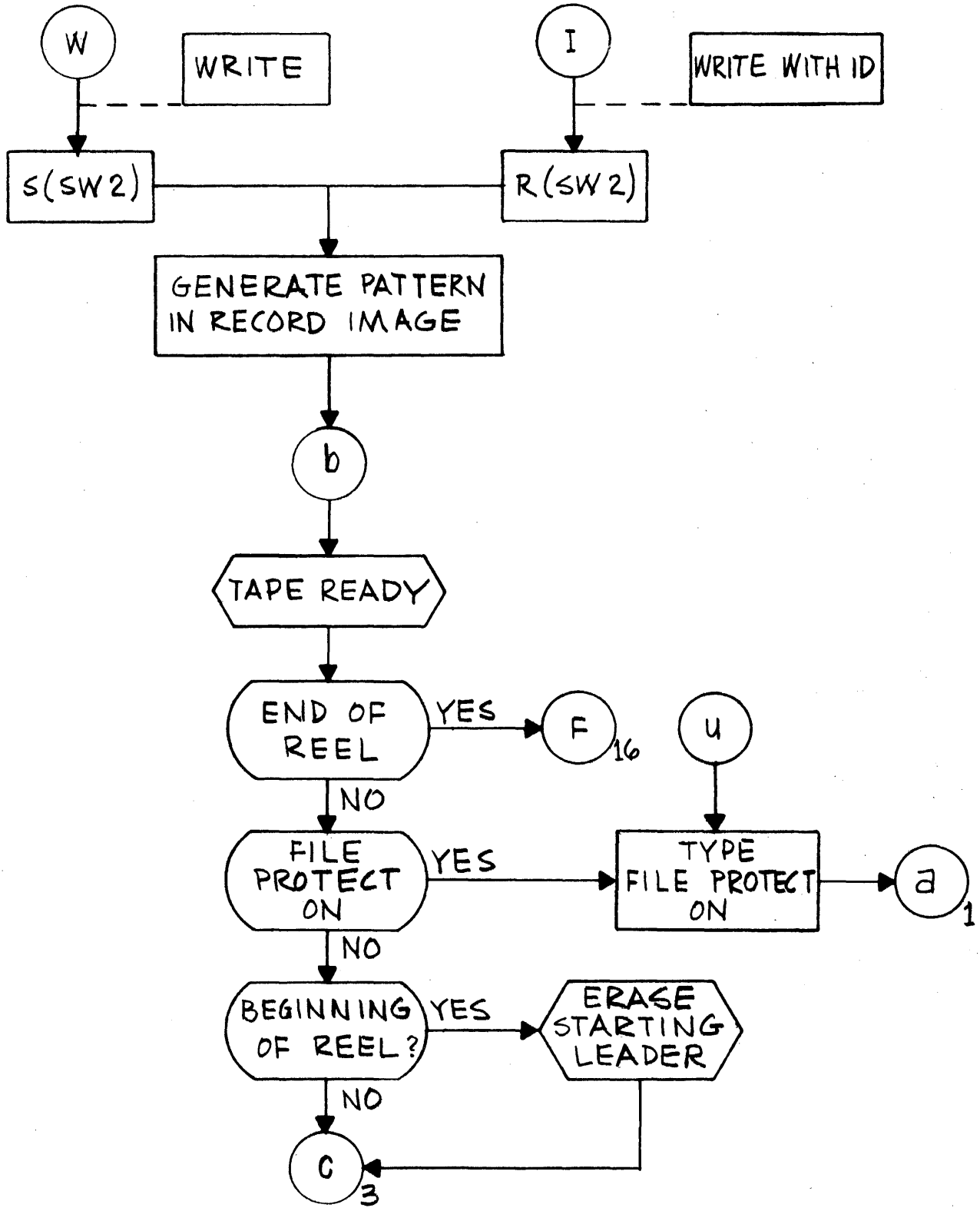
W
WRITE
I
WRITE WITH ID
S(SW2)
R(SW2)
GENERATE PATTERN IN RECORD IMAGE
b
TAPE READY
END OF REEL
YES
F
16
u
NO
FILE PROTECT ON
YES
TYPE FILE PROTECT ON
a
1
NO
BEGINNING OF REEL?
YES
ERASE STARTING LEADER
NO
C
3

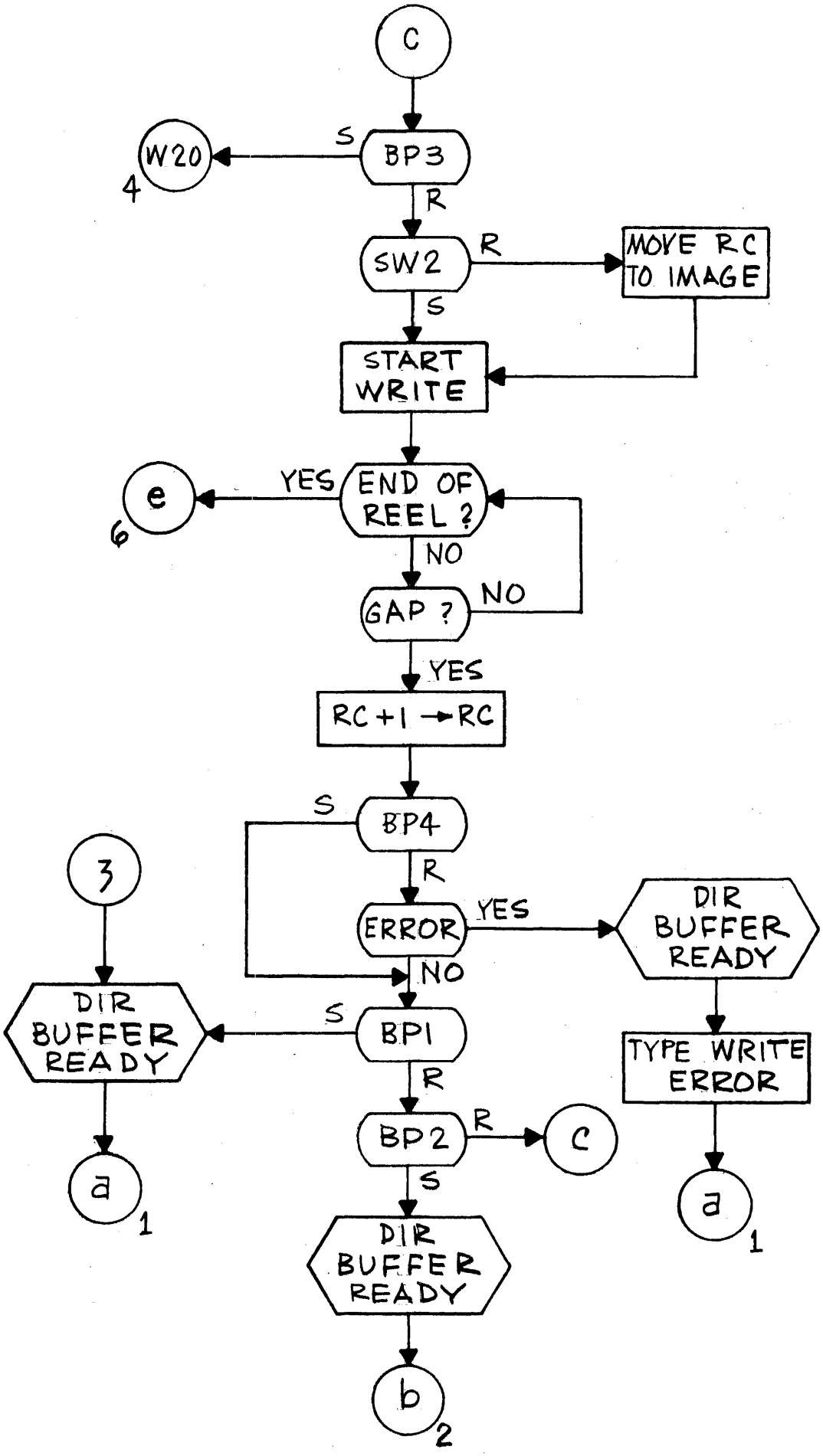
C
S
W20
4
BP3
R
SW2
R
MOVE RC TO IMAGE
S
START WRITE
YES
e
6
END OF REEL ?
NO
GAP ?
NO
YES
RC+1 → RC
S
BP4
R
3
ERROR
YES
DIR BUFFER READY
NO
DIR BUFFER READY
S
BP1
TYPE WRITE ERROR
R
BP2
R
C
S
a
1
DIR BUFFER READY
a
1
b
2

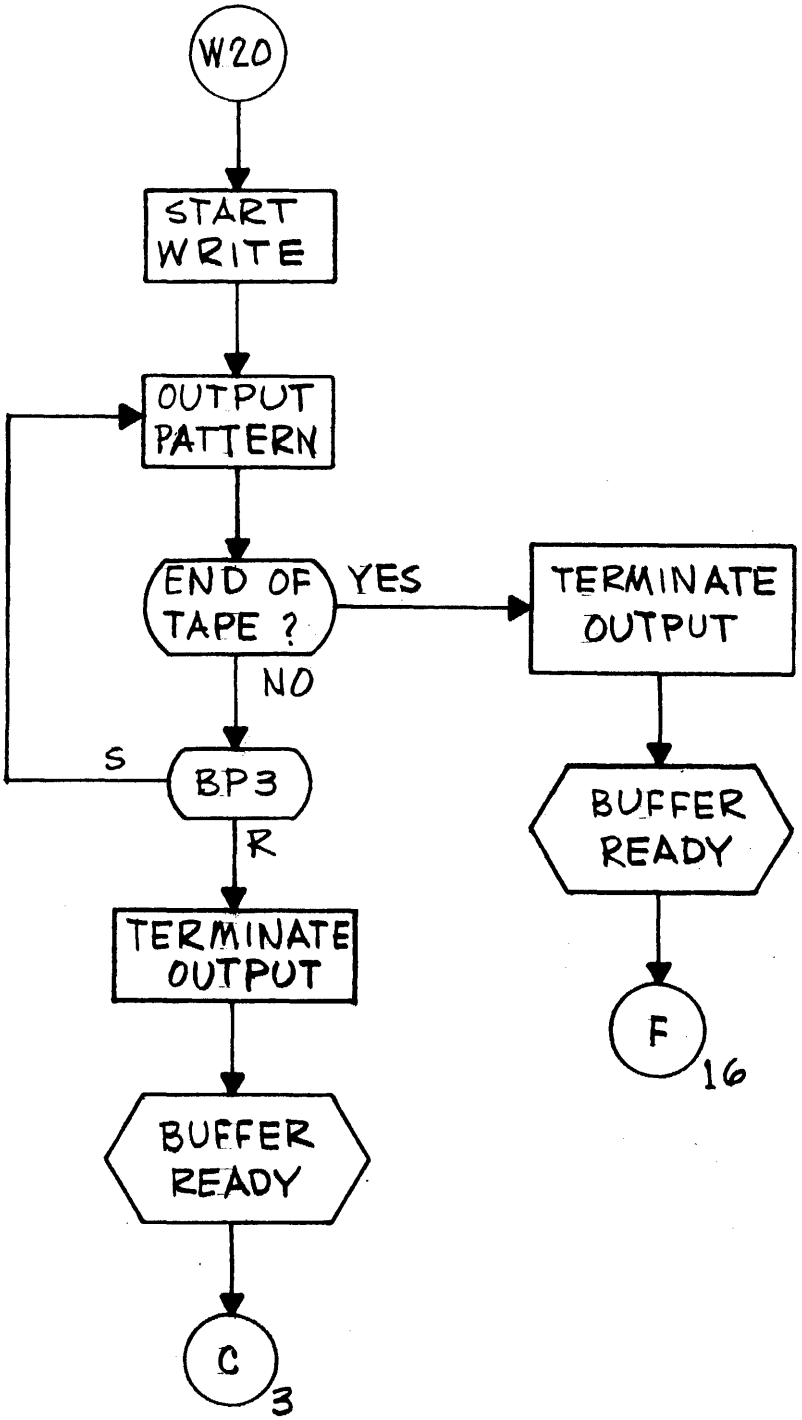
W20
START WRITE
OUTPUT PATTERN
END OF TAPE ?
YES
TERMINATE OUTPUT
NO
S
BP3
R
BUFFER READY
TERMINATE OUTPUT
F
16
BUFFER READY
C
3

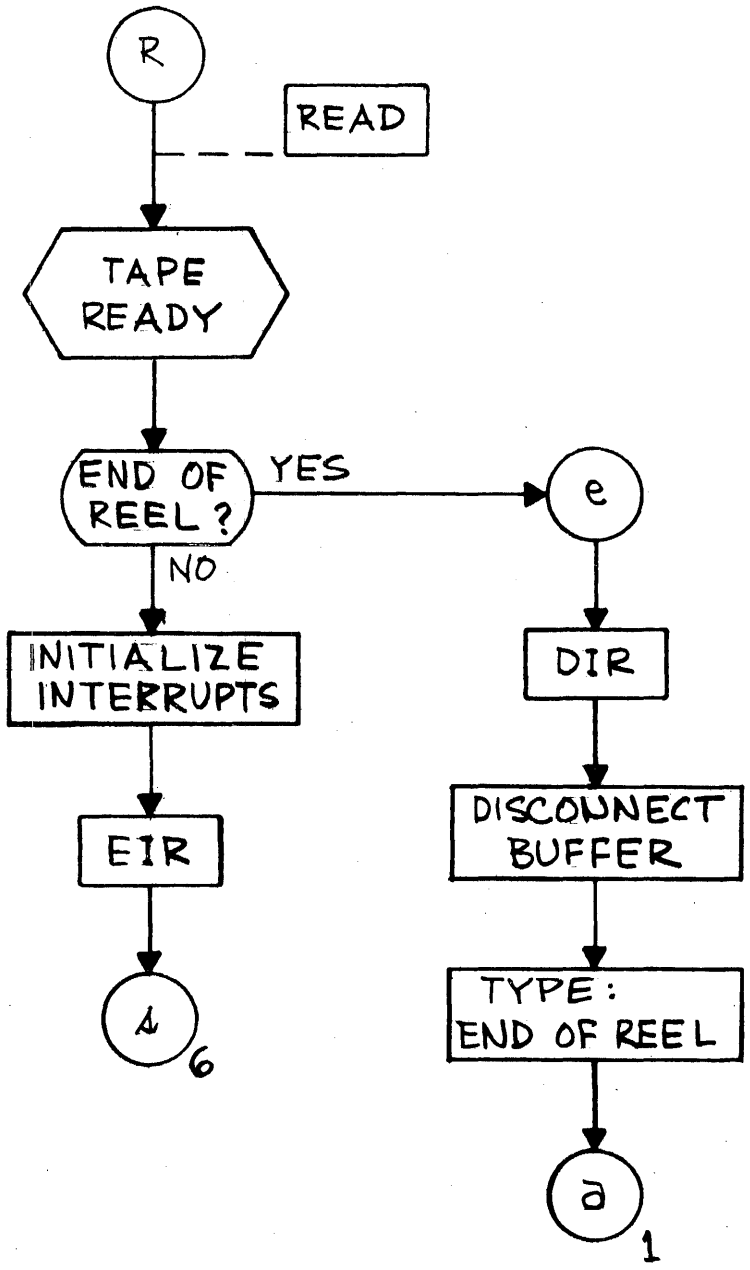
R
READ
TAPE READY
END OF REEL?
YES
NO
e
INITIALIZE INTERRUPTS
DIR
EIR
DISCONNECT BUFFER
TYPE: END OF REEL
a 6
a 1

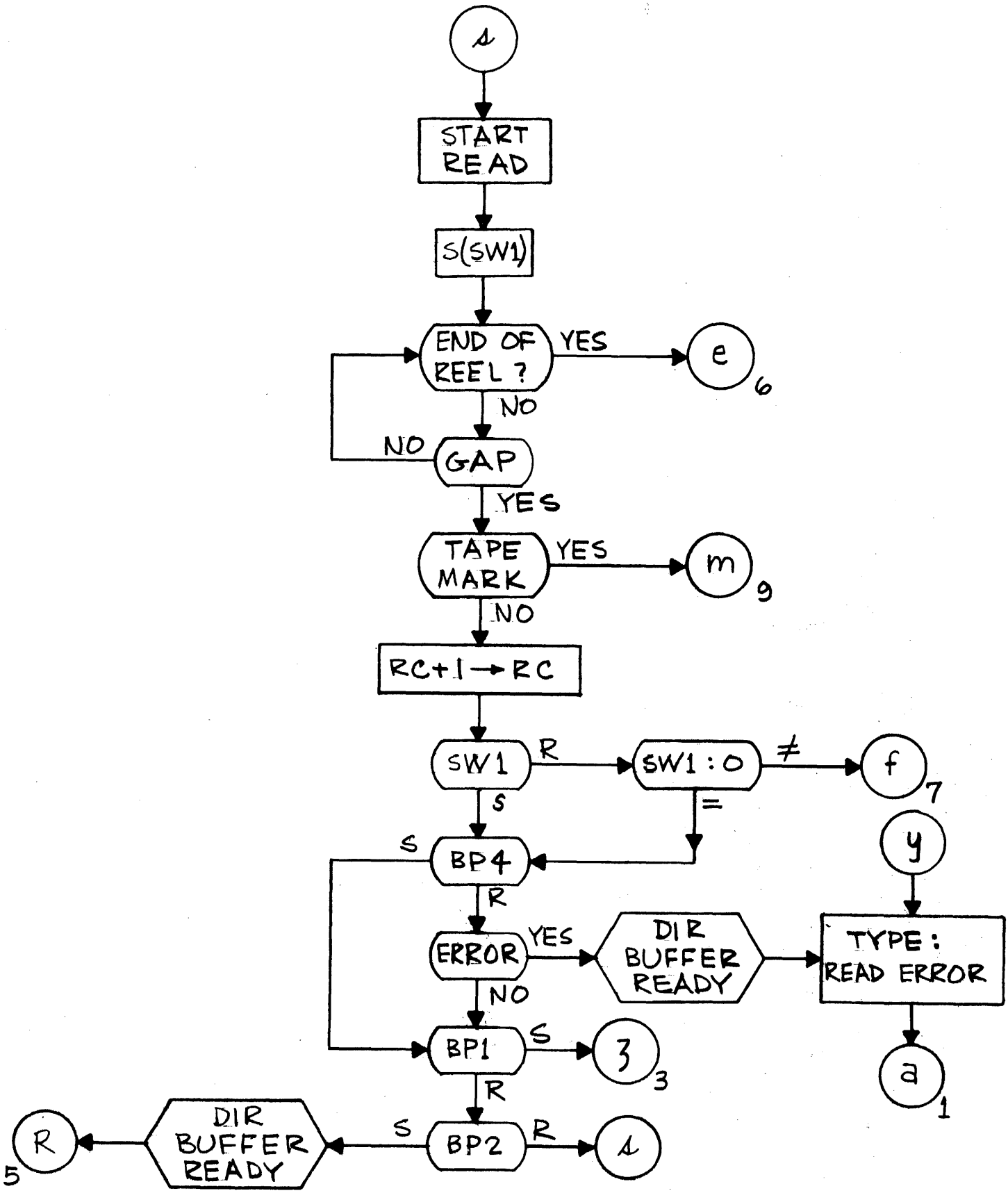
A
START READ
S(SW1)
END OF REEL ?
YES
e
6
NO
NO
GAP
YES
TAPE MARK
YES
m
9
NO
RC+1 → RC
SW1
R
SW1 : 0
≠
f
7
S
=
S
BP4
y
R
ERROR
YES
DIR BUFFER READY
TYPE : READ ERROR
NO
BP1
S
3
3
R
a
1
R
5
DIR BUFFER READY
S
BP2
R
A

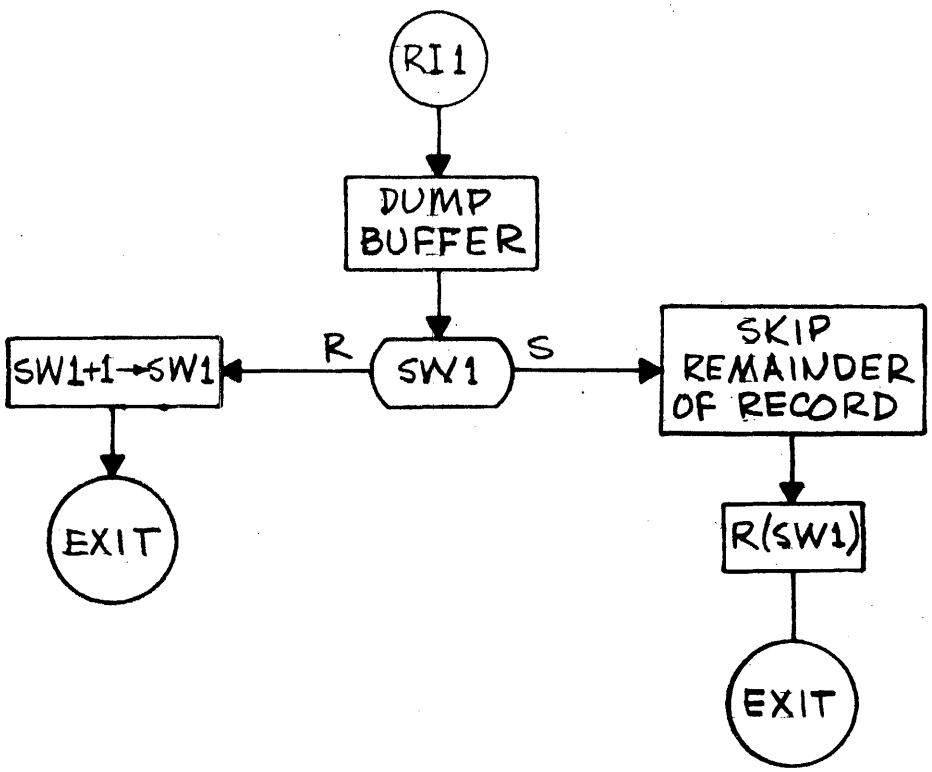
RI 1
DUMP BUFFER
SW1
R
S
SW1+1→SW1
SKIP REMAINDER OF RECORD
EXIT
R(SW1)
EXIT

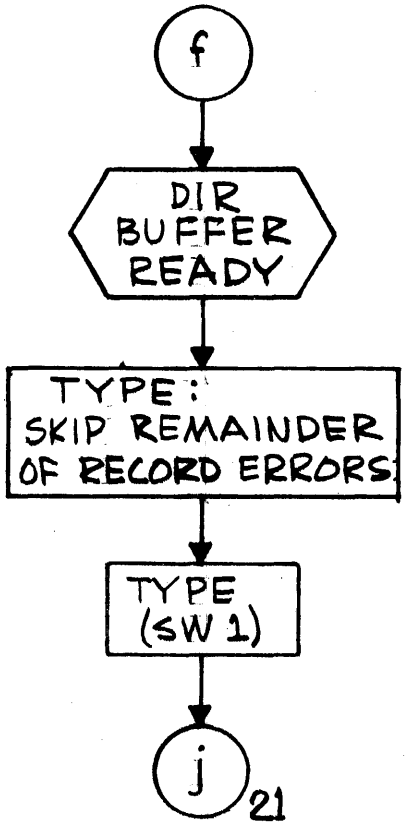
f
DIR BUFFER READY
TYPE: SKIP REMAINDER OF RECORD ERRORS
TYPE (SW 1)
j
21

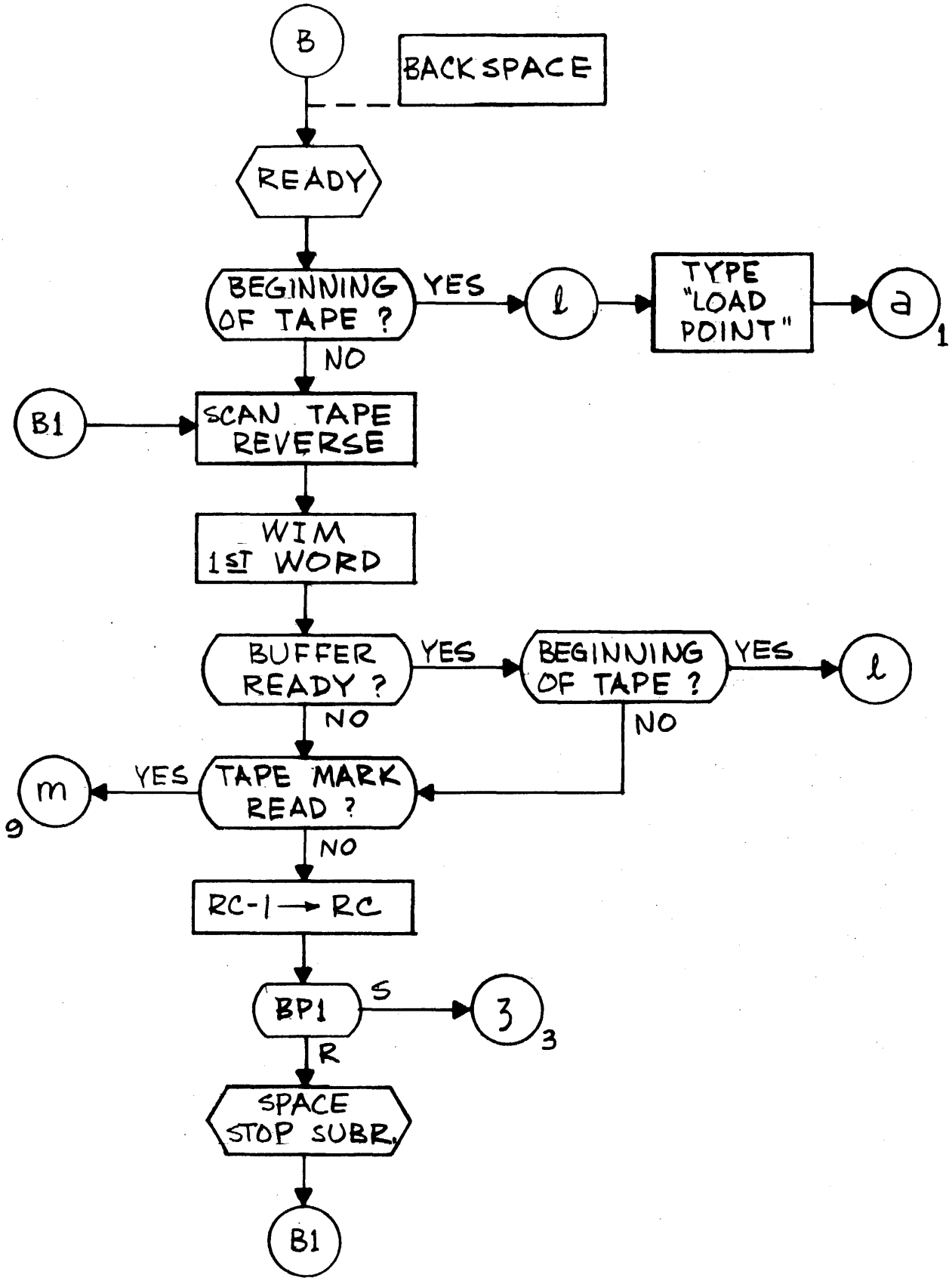
B
BACKSPACE
READY
BEGINNING OF TAPE ?
YES
l
TYPE "LOAD POINT"
a
1
NO
B1
SCAN TAPE REVERSE
WIM 1ST WORD
BUFFER READY ?
YES
BEGINNING OF TAPE ?
YES
l
NO
NO
m
9
YES
TAPE MARK READ ?
NO
RC-1 → RC
BP1
S
3
3
R
SPACE STOP SUBR.
B1

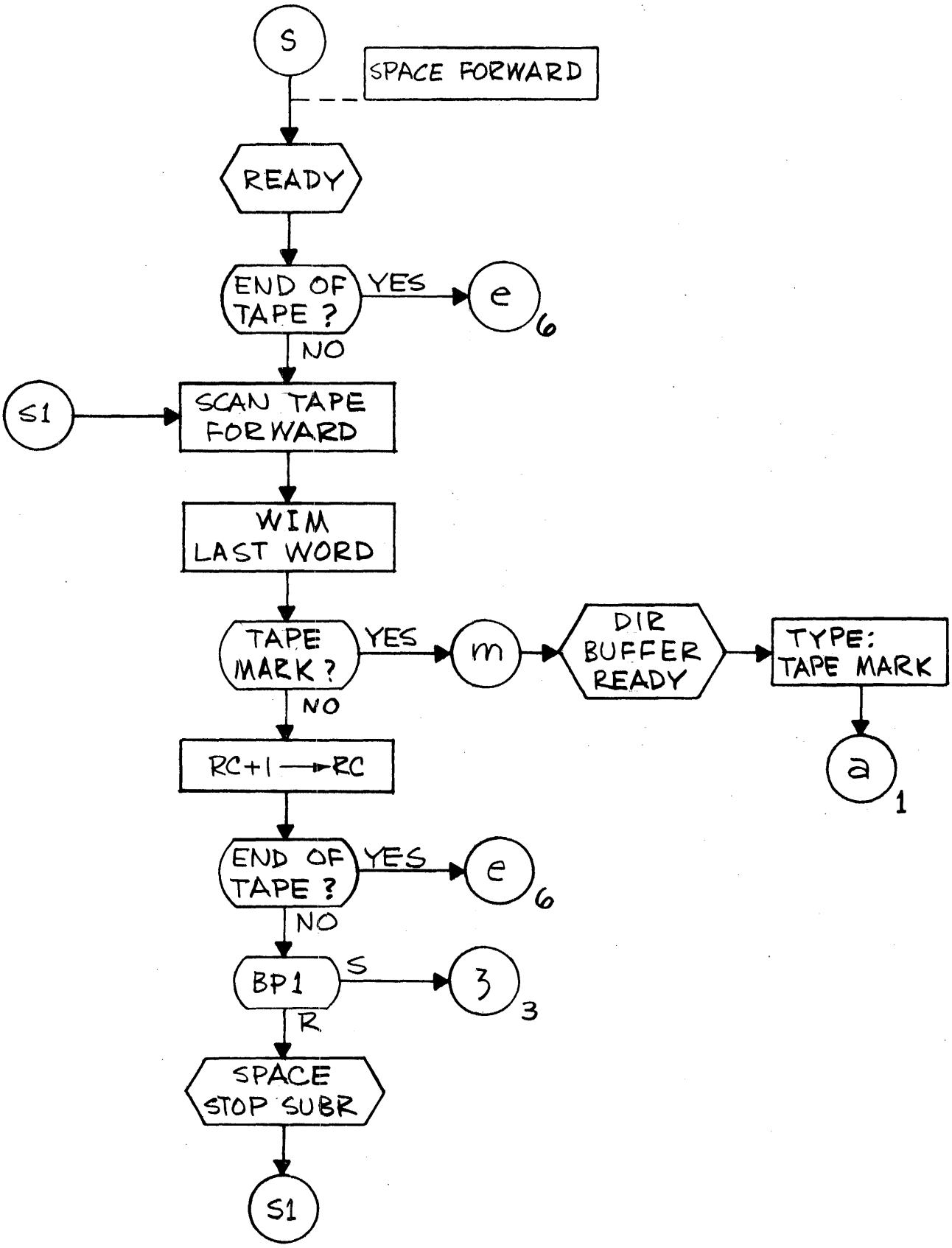
S
SPACE FORWARD
READY
END OF TAPE ?
YES
e
6
NO
S1
SCAN TAPE FORWARD
WIM LAST WORD
TAPE MARK ?
YES
m
DIR BUFFER READY
TYPE: TAPE MARK
a
1
NO
RC+1 → RC
END OF TAPE ?
YES
e
6
NO
BP1
S
3
3
R
SPACE STOP SUBR
S1

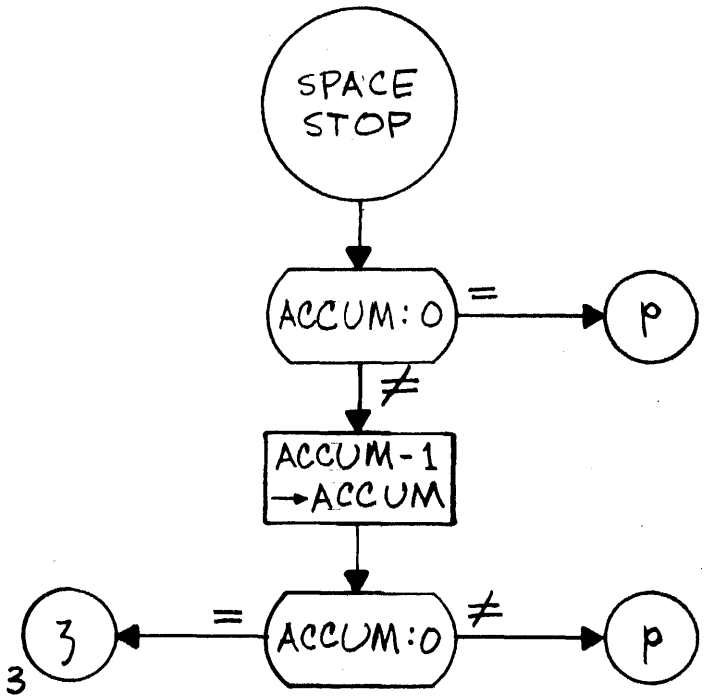
SPACE
STOP
ACCUM:0
=
p
≠
ACCUM-1
→ACCUM
3
=
ACCUM:0
≠
p
3

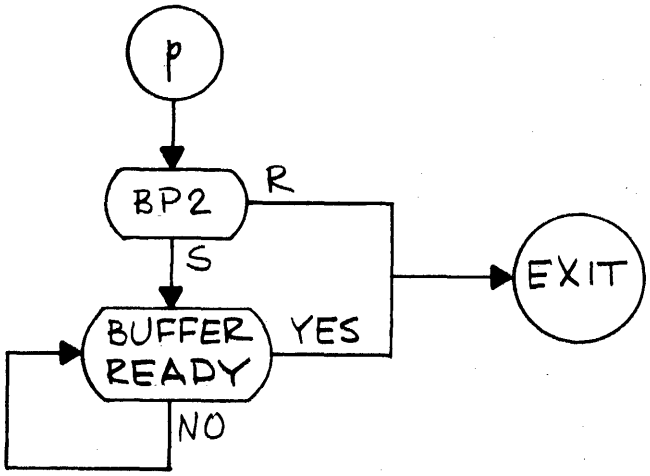
p
BP2
R
S
EXIT
BUFFER
READY
YES
NO

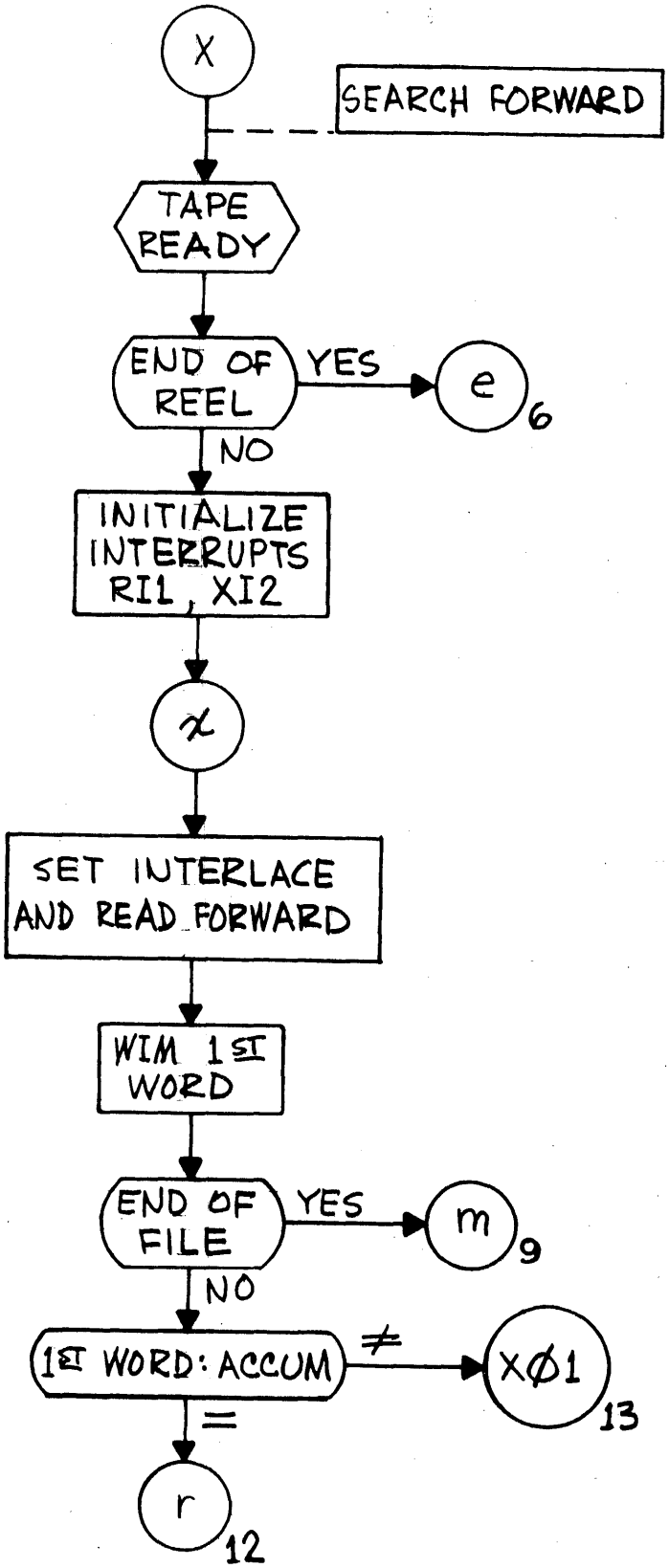
X
SEARCH FORWARD
TAPE READY
END OF REEL
YES
e
6
NO
INITIALIZE INTERRUPTS RI1, XI2
x
SET INTERLACE AND READ FORWARD
WIM 1ST WORD
END OF FILE
YES
m
9
NO
1ST WORD: ACCUM
≠
XØ1
13
=
r
12

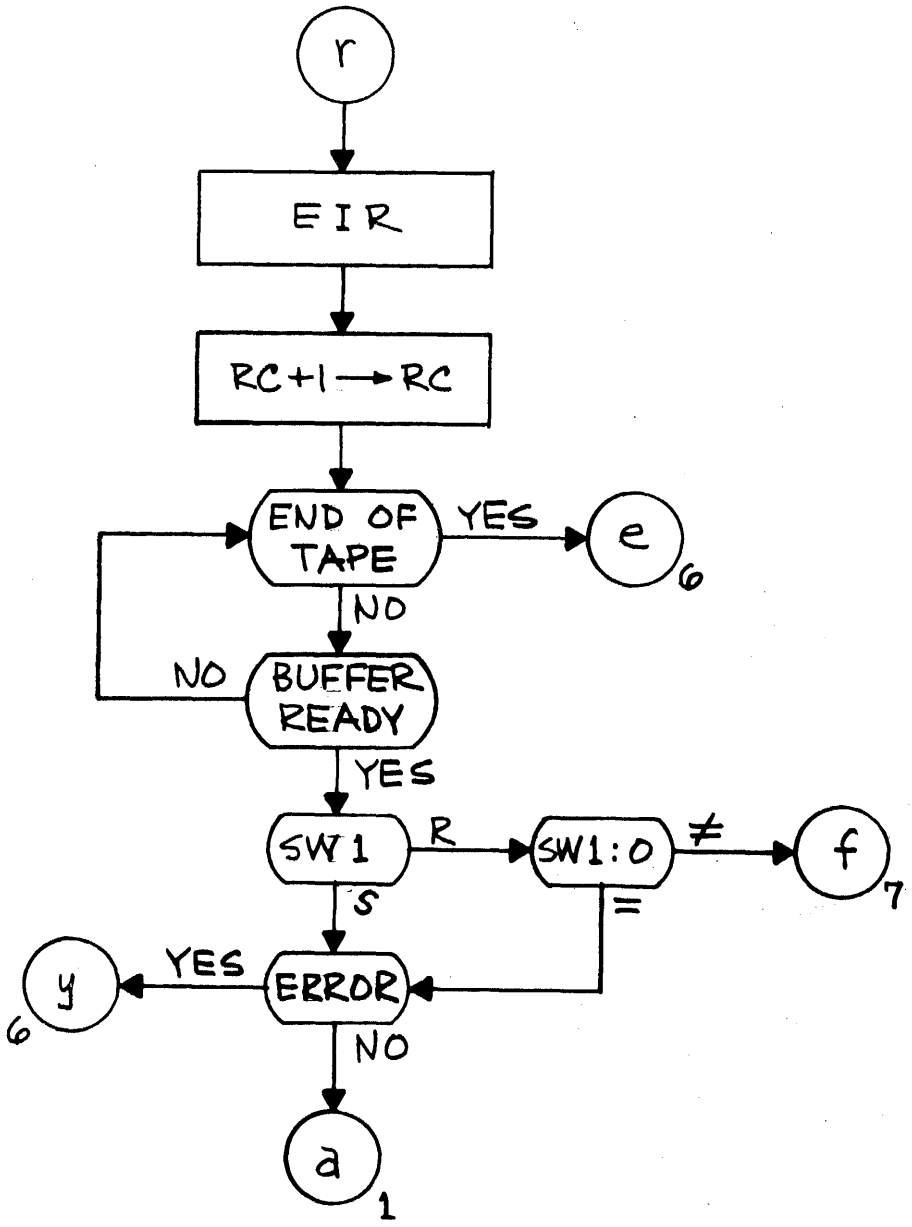
r
EIR
RC+1 → RC
END OF TAPE
YES
e
6
NO
NO
BUFFER READY
YES
SW 1
R
SW1:0
≠
f
7
S
=
y
6
YES
ERROR
NO
a
1

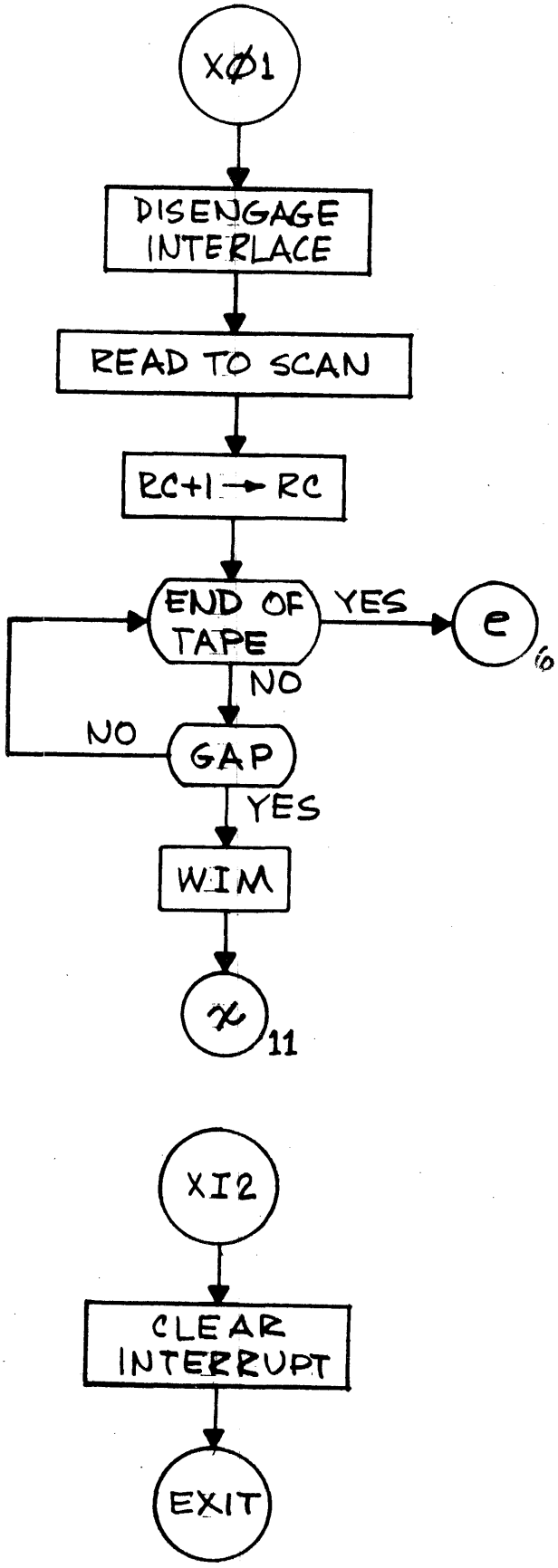
XØ1
DISENGAGE INTERLACE
READ TO SCAN
RC+1 → RC
END OF TAPE
YES
e
6
NO
NO
GAP
YES
WIM
x
11
XI2
CLEAR INTERRUPT
EXIT

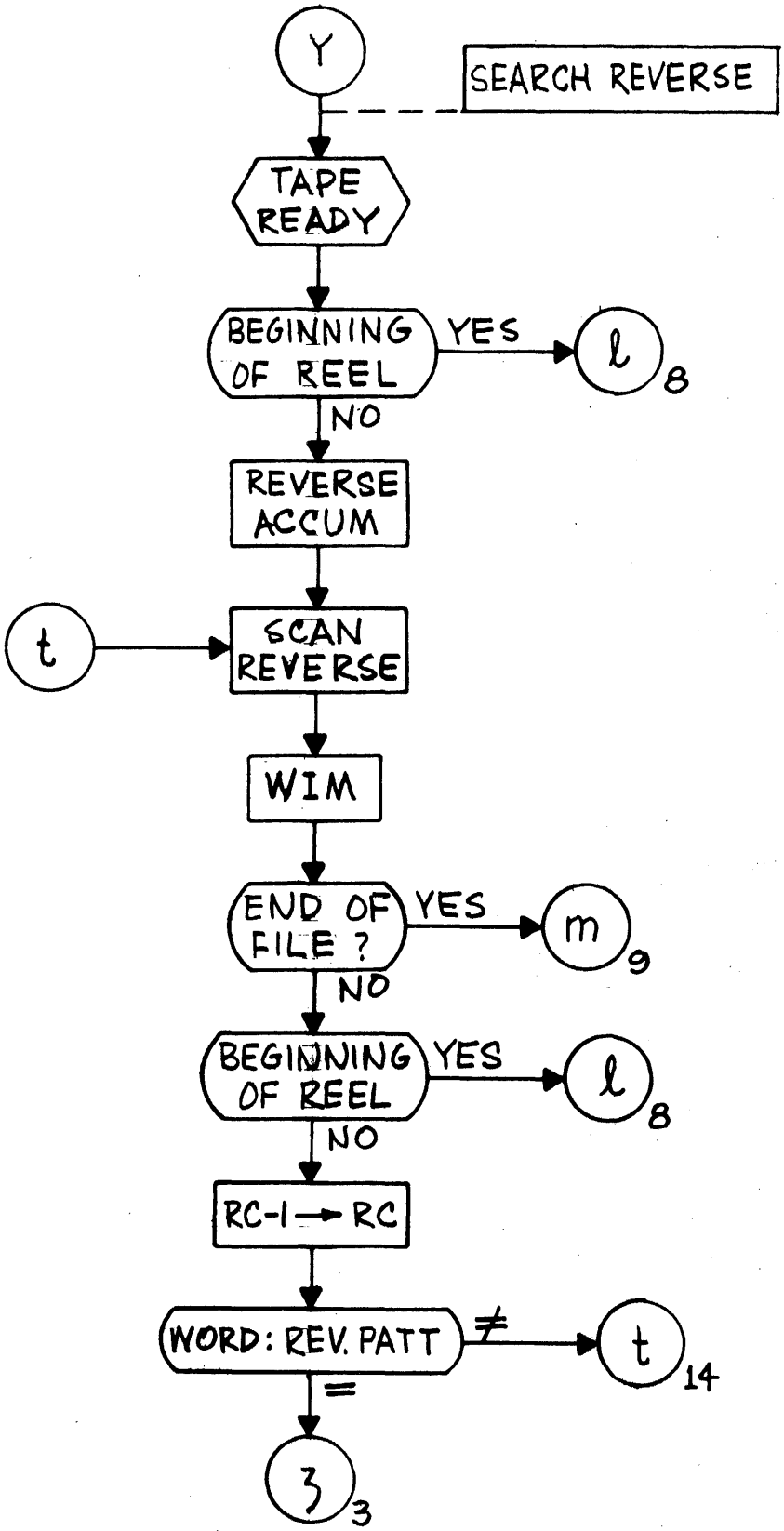
Y
SEARCH REVERSE
TAPE READY
BEGINNING OF REEL
YES
ℓ 8
NO
REVERSE ACCUM
t
SCAN REVERSE
WIM
END OF FILE ?
YES
m 9
NO
BEGINNING OF REEL
YES
ℓ 8
NO
RC-1 → RC
WORD: REV. PATT
≠
t 14
=
3 3

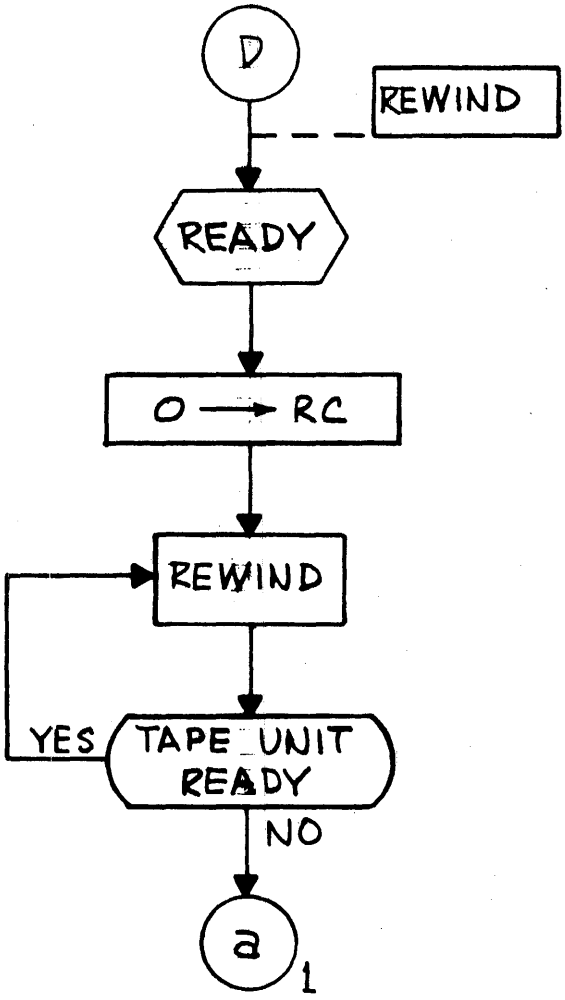
D
REWIND
READY
0 → RC
REWIND
YES
TAPE UNIT READY
NO
a1

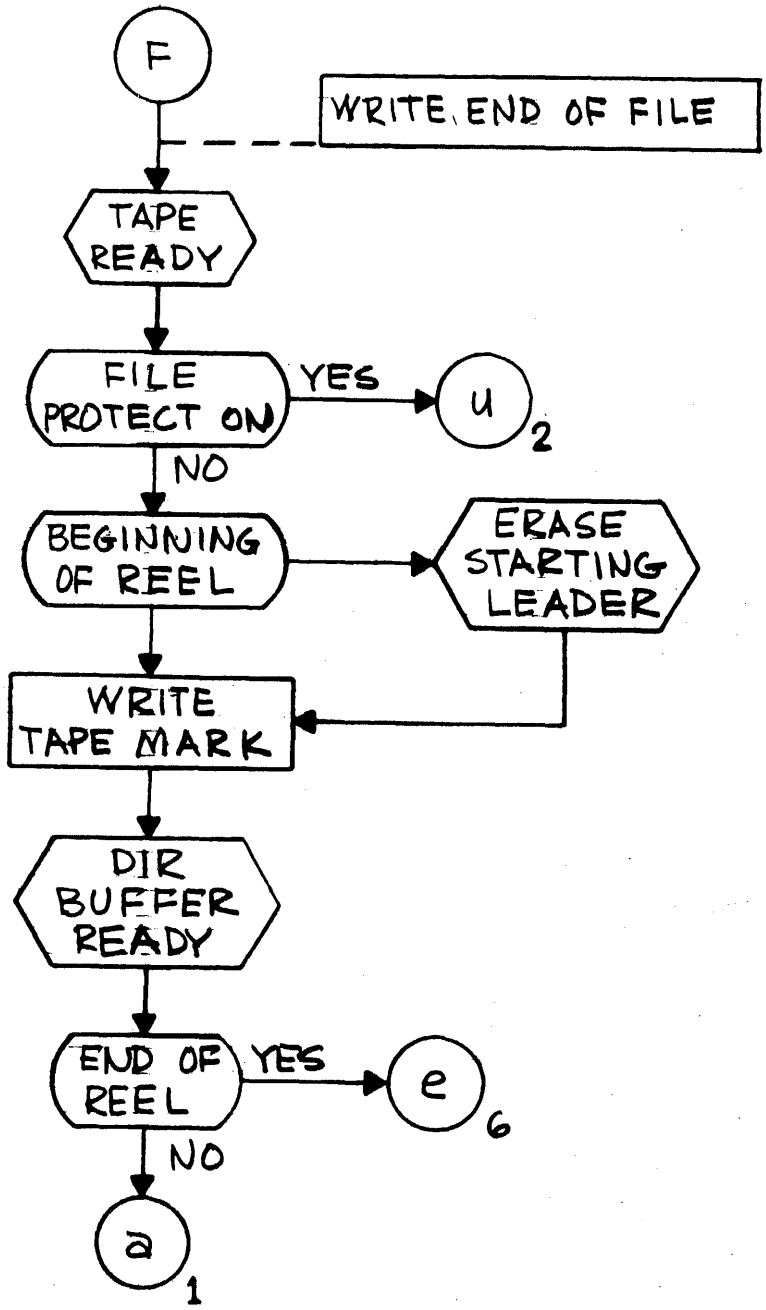
F
WRITE END OF FILE
TAPE READY
FILE PROTECT ON
YES
u
2
NO
BEGINNING OF REEL
ERASE STARTING LEADER
WRITE TAPE MARK
DIR BUFFER READY
END OF REEL
YES
e
6
NO
a
1

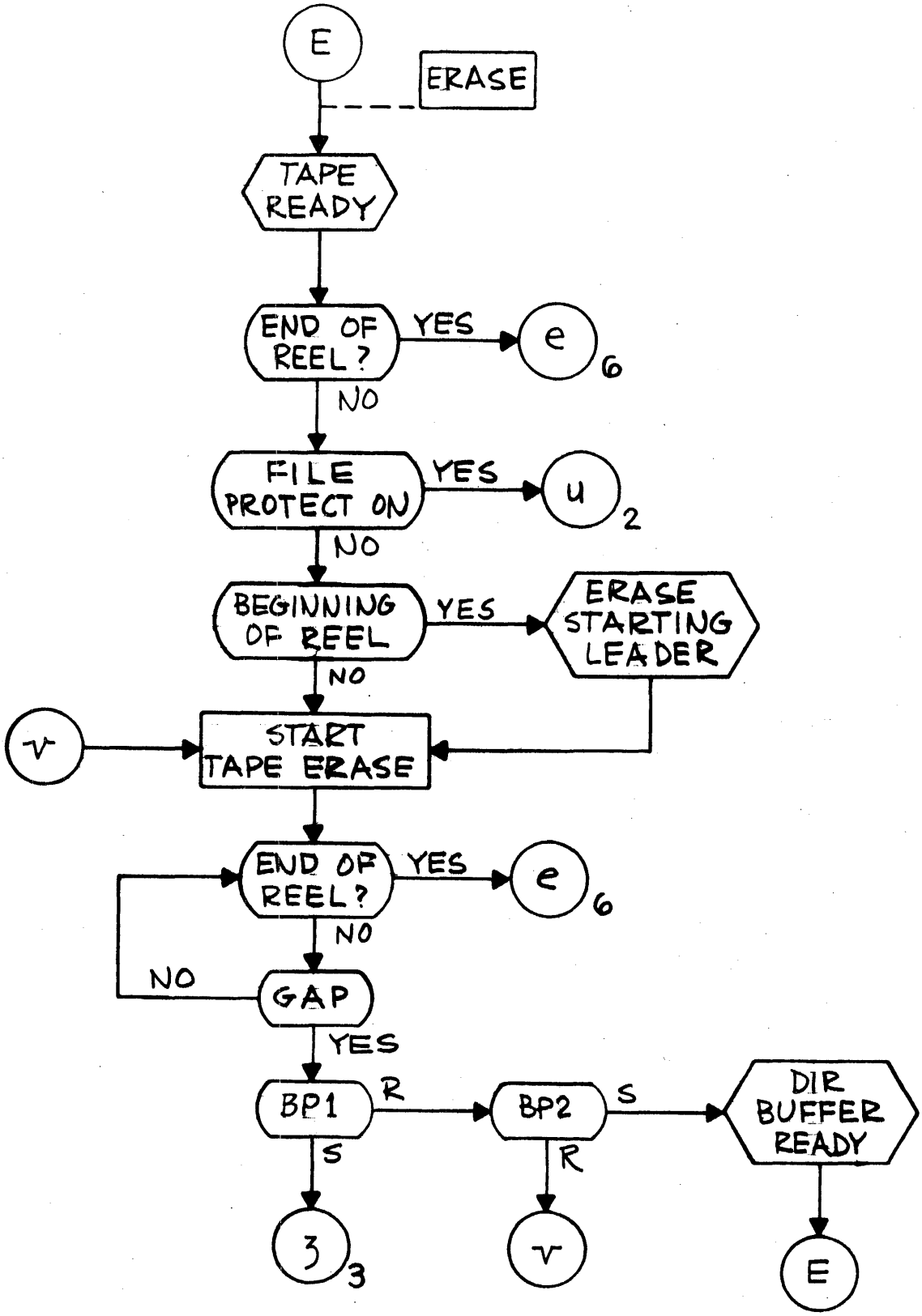
E
ERASE
TAPE READY
END OF REEL?
YES
e
6
NO
FILE PROTECT ON
YES
u
2
NO
BEGINNING OF REEL
YES
ERASE STARTING LEADER
NO
v
START TAPE ERASE
END OF REEL?
YES
e
6
NO
NO
GAP
YES
BP1
R
BP2
S
DIR BUFFER READY
S
R
3
3
v
E

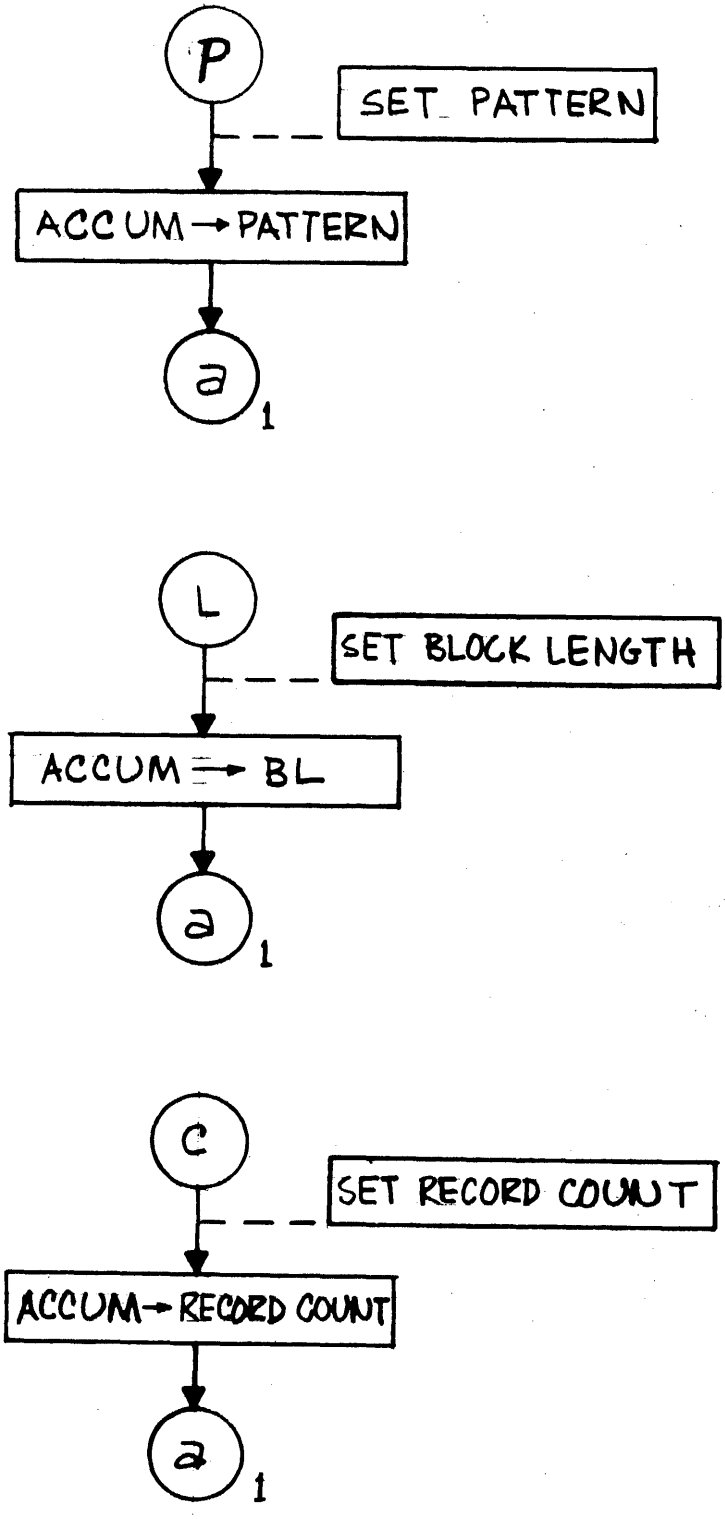
P
SET PATTERN
ACCUM → PATTERN
a 1
L
SET BLOCK LENGTH
ACCUM → BL
a 1
C
SET RECORD COUNT
ACCUM → RECORD COUNT
a 1

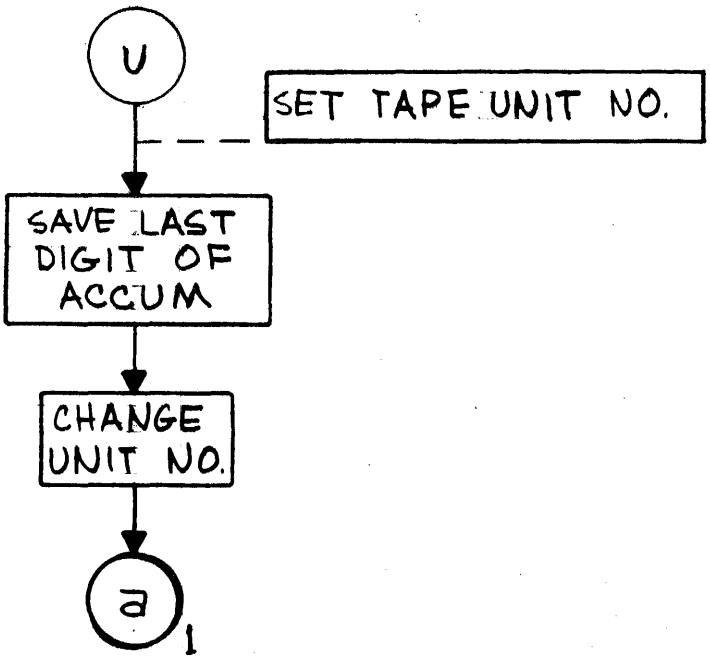
U
SET TAPE UNIT NO.
SAVE LAST DIGIT OF ACCUM
CHANGE UNIT NO.
a
1

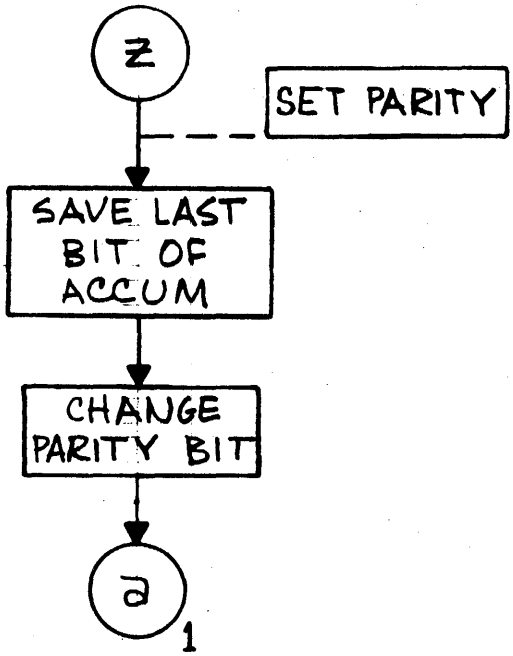
Z
SET PARITY
SAVE LAST BIT OF ACCUM
CHANGE PARITY BIT
a
1

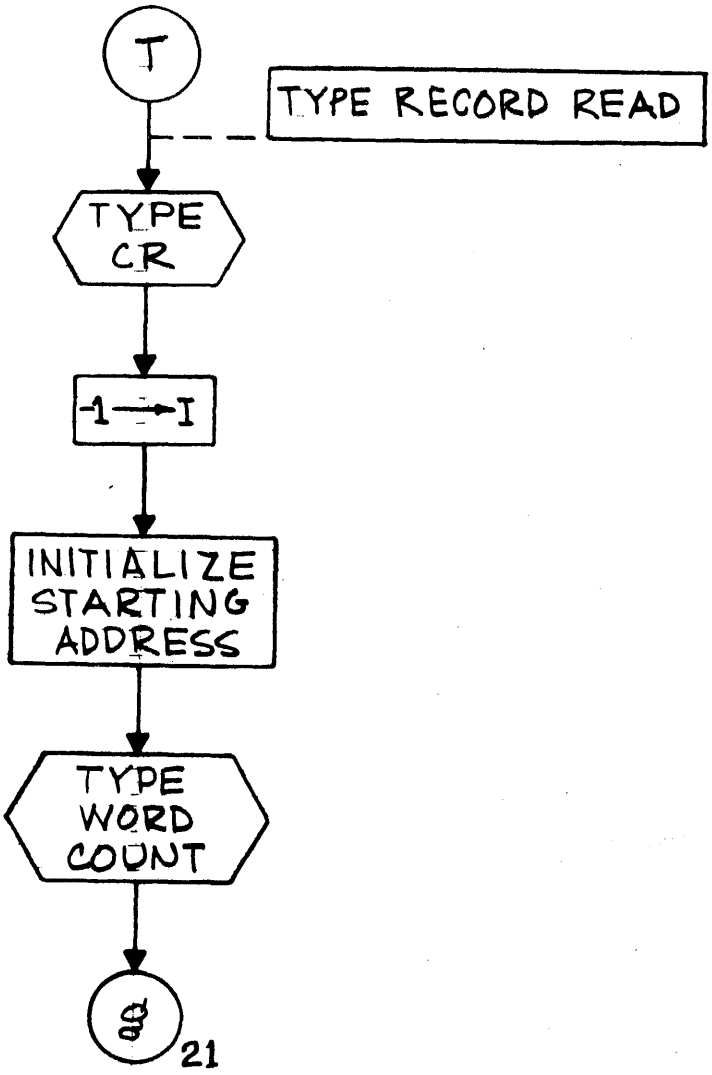
T
TYPE RECORD READ
TYPE CR
1 → I
INITIALIZE STARTING ADDRESS
TYPE WORD COUNT
G
21

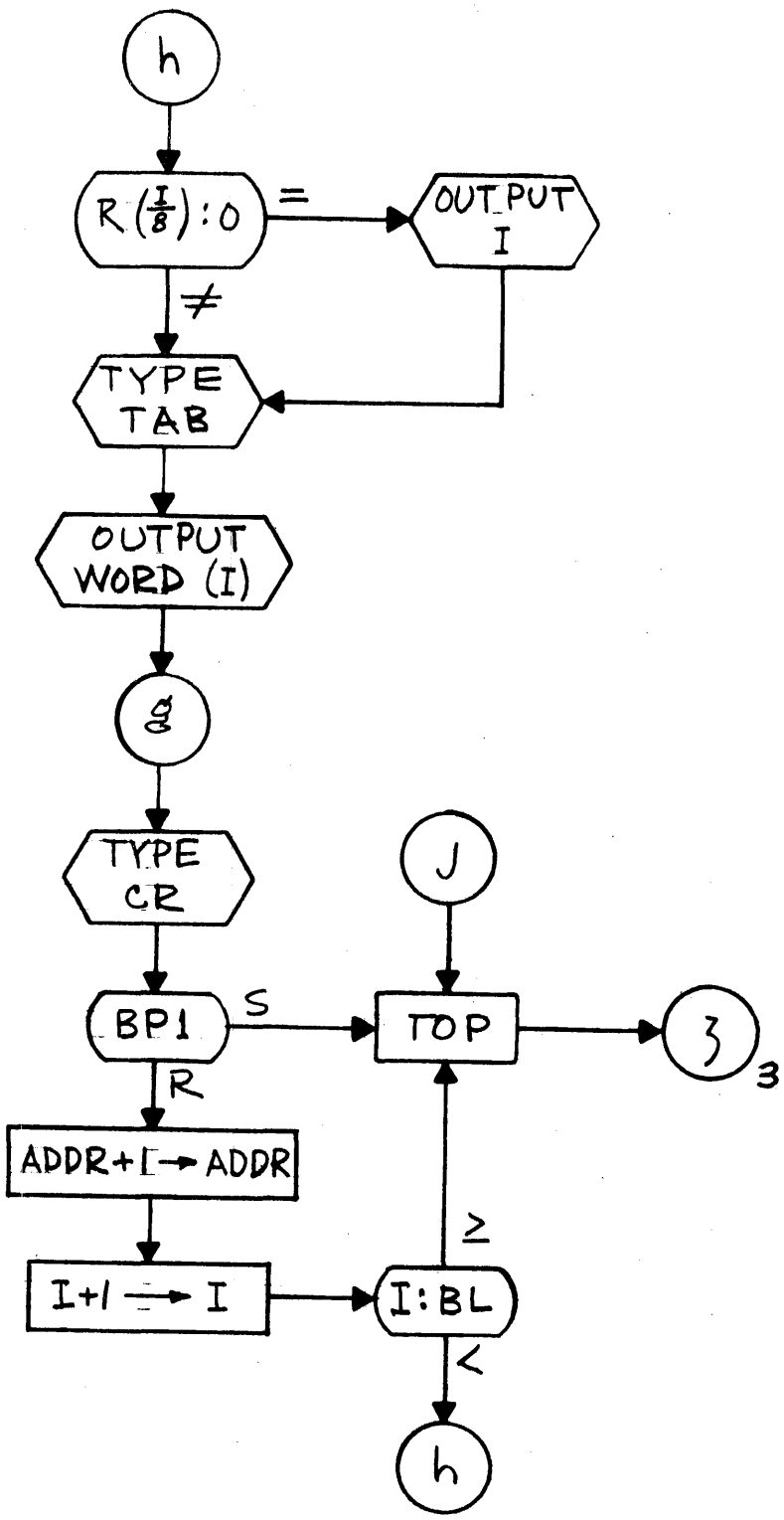
h
R(I/8):0
=
OUT_PUT I
≠
TYPE TAB
OUTPUT WORD (I)
g
TYPE CR
J
BP1
S
TOP
3
3
R
ADDR+1→ADDR
I+1→I
I:BL
≥
<
h

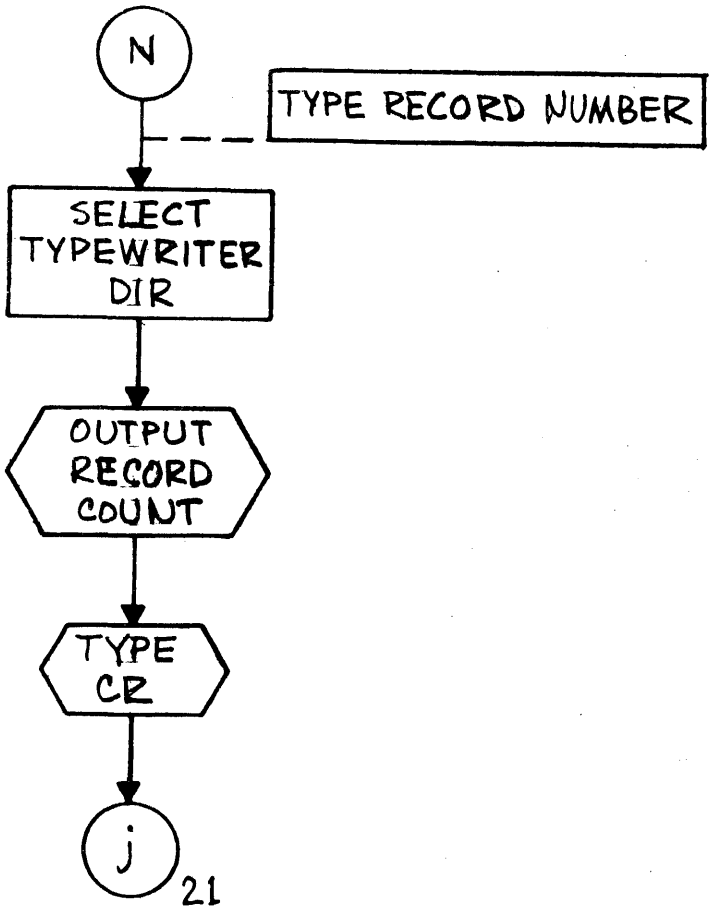
N
TYPE RECORD NUMBER
SELECT TYPEWRITER DIR
OUTPUT RECORD COUNT
TYPE CR
j
21

IDENTIFICATION: 42 KC Magnetic Tape Test Program, Y Buffer

AUTHOR: A. W. England, SDS

ACCEPTED: 28 May 1963

COMPUTER CONFIGURATION: All SDS 920 systems (or 910 with a typewriter) which have one or more magnetic tape units connected to the Y buffer through a 9248 tape control unit. The Y buffer must have a 9121 interlace control attached.

PURPOSE: To provide a simple and easy means for initial checkout and testing of 42 KC magnetic tape units.

PROGRAMMED OPERATORS: None

STORAGE: The program occupies 593 words from 400_8 to 1520_8. It uses the HELP Word Output Subroutine located at 200_8. The area from the end of the program to the end of memory may be used as input and output record image.

TIMING: The program is sufficiently fast to keep the tape operating at full speed for all operations.

USE: The user is referred to the description of the W buffer version of this program (Catalog No. 074001) for details on USE and METHOD.

IDENTIFICATION: 42 KC Magnetic Tape System Exerciser

AUTHOR: A. W. England, SDS

ACCEPTED: 28 May 1963

COMPUTER CONFIGURATION: All 920 systems (or 910 with typewriter) which have one or more tape units attached to the W buffer through a 9248 tape control unit. The W buffer must have a 9121 interlace control attached.

PURPOSE: This program is designed to exercise from one to eight tape units by first writing random numbers in random length records on all tapes under test and then reading these records back and comparing them with the numbers written. An attempt is made to tabulate and output all useful information concerning the errors made, if any, the mode of operation of each unit, and the number of passes over the tape.

PROGRAMMED OPERATORS: None

STORAGE: The program occupies from location 40_8 to 1776_8. In a 2K machine the next 1023 words are used as a record buffer area. If the computer has a 4K memory the next 2047 words are used. If the memory is 6K or larger the next 4095 words are used.

TIMING: The program requires approximately 20 minutes to write or read a full reel (2400 feet) of tape.

USE: The user is referred to the description of the Y buffer version of this program (Catalog No. 074004) for details on USE and METHOD.

IDENTIFICATION: 42 KC Magnetic Tape System Exerciser, Y Buffer

AUTHOR: A. W. England, SDS

ACCEPTED: 23 May 1963

COMPUTER CONFIGURATION: All 920 systems, or any 910 with typewriter, which have one or more tape units attached to the Y Buffer through a 9248 tape control unit. The Y Buffer must have a 9121 Interlace control attached.

PURPOSE: This program is designed to exercise from one to eight tape units by first writing random numbers in random length records on all tapes under test and then reading these records back and comparing them with the numbers written. An attempt is made to tabulate and output all useful information concerning the errors made, if any, the mode of operation of each unit, and the number of passes over the tape.

STORAGE: The program occupies from location 40_8 to 1776_8. In a 2K machine the next 1023 words are used as a record buffer area. If the computer has a 4K memory the next 2047 words are used. If the memory is 6K or larger the next 4095 words are used.

TIMING: The program requires approximately 20 minutes to write or read a full reel (2400 feet) of tape.

USE:

1.0 LOADING

Place tape in reader and FILL. When loading is complete the light on the typewriter will light if no loading error occured.

2.0 KEYBOARD CONTROL

When the keyboard light is on, the operator has control over the program. By actuating various keys he may set the test parameters, inspect results or start the exerciser test running.

2.1 REGAINING KEYBOARD CONTROL

Control may be returned to the keyboard mode at any time by moving the RUN-IDLE-STEP switch to IDLE, pressing the START button, and moving the switch first to STEP then to RUN.

USE: (cont.)

3.0 CONTROL FUNCTIONS

The following list contains the call letters for the various functions which the program will perform. These may be typed anytime the typewriter light is lit.

3.1 SELECT UNITS, "U"

The units to be exercised are selected by first typing the letter "U" followed by the several unit numbers and finally a carriage return. After the last unit number is entered a carriage return must be given to terminate the unit select operation.

3.2 SET STARTING RANDOM NUMBER, "N"

The initial random number is set by first typing the octal number desired (up to 8 digits) and then the letter N. The number being typed can be set to zero by typing a carriage return.

3.3 SET MAXIMUM FILE LENGTH, "M"

The maximum number of records in the test file is set by typing the desired number of records in octal followed by the letter M. If the entire 2400 foot reel is to be written a maximum count of 10000_8 or greater should be sufficient.

3.4 MODE SELECT

The recording mode, either BCD or Binary is selected by typing the appropriate letter.

3.4.1 Select Binary Mode, "B"

Typing the letter B will cause the appropriate EOM instructions to be converted to the binary mode of operation.

3.4.2 Select BCD Mode, "D"

Typing the letter D will cause the EOM instructions to be set for BCD operation.

3.5 SELECT OUTPUT MEDIA

The output of the various messages and counters during the operation of the program can be on either the on-line typewriter or on paper tape for off-line listing. This is controlled by typing the appropriate letter before starting.

USE: (cont.)

3.5.1 Select Typewriter Output, "T"

The typewriter is selected by typing the letter T.

3.5.2 Select Punch Output, "P"

The punch is selected by typing the letter P.

3.6 INITIATE TAPE OPERATION

After the appropriate parameters have been set the tape exercise operation may be initiated. There are three ways in which this may be done. If nothing has been recorded then the exercise must be begun with a START WRITE. However, once a file of information is written on tape and the program is stopped the other two starts can be used.

3.6.1 Start Write, "S"

To begin the exercise operation, type the letter S. The program will rewind all units and start to write a random number test file on the selected units.

3.6.2 Continue Operation, "C"

Once the exercise operation has been stopped with Breakpoint 1 (see section 4.1) it can be resumed from the point at which it was stopped by typing the letter C.

3.6.3 Restart Read, "R"

If during a read pass the program is stopped and the operator would like to reread the file from the beginning he can type the letter R to restart the read pass.

3.7 OUTPUT OPERATIONAL STATUS, "O"

The operator can inspect the status of the operation at anytime by stopping the program with Breakpoint 1 (see section 4.1) and typing the letter O. The program will then type out the status of the exercise operation as follows:

3.7.1 Type of Pass

It types READ or WRITE depending on the type of pass in progress.

3.7.2 Mode of Operation

It then types the mode of operation, either BINARY or BCD.

USE: (cont.) 3.7.3 Density and Unit

The density setting and UNIT NO. of the tape unit currently being addressed are typed. If this unit should not be in automatic the program cannot ascertain its density setting so it will type ***.

3.7.4 Program Counters

After this information the program will type a table of 17 counters each identified by a three or four character symbol. These symbols and their definitions follow:

MRC Maximum Record Count. This is the octal number entered with the M key at the start of the exercise operation.

WRC Write Record Count. If in a write pass this indicates the number of records written. In a read pass it indicates the total number written in the previous write pass.

RRC Read Record Count. This indicates the number of records read during a read pass.

WPC Write Pass Count. The number of write passes completed.

RPC Read Pass Count. The number of read passes completed.

WEC Write Error Count. The number of write errors that have occurred.

RWEC Rewrite Error Count. This number of rewrite errors.

PREC Permanent Read Error Count. The records that were read bad 10 times.

CPEC Character Parity Error Count. The number of character parity errors that have occurred since the start of the exercise.

LPEC Longitudinal Parity Error Count. The number of longitudinal parity errors that have occurred. For each read try only one character or longitudinal parity can be counted and character parity has priority.

USE: (cont.)

WCEC Word Count Error Counts. The number of word count errors that have occurred. A word count error occurs if the record read is longer or shorter than the record expected.

CH1, CH2, CH3, CH4, CH5, CH6 — Errors in Channels 1-6. Channel 1 is the most significant bit, channel 6 the least. These counters are also output whenever a read error occurs if Breakpoint 2 is RESET. After a read error output they are cleared.

4.0 BREAKPOINT SWITCHES

The four Breakpoint switches are used to change the status of the program while it is running. These functions are as follows:

4.1 BREAKPOINT 1

RESET: Normal

SET: Stop operation. After almost every tape operation there is a STOP point. If Breakpoint 1 is set the program will mark its place and return to the keyboard control mode. Operation can be continued by typing the letter C.

4.2 BREAKPOINT 2

RESET: Output counters and messages whenever the normal output situation occurs.

SET: Skip the output of messages and counters. This will inhibit all output except the OUT OF SYNC message and the FILE PROTECT ON message.

4.3 BREAKPOINT 3

RESET: At the end of a read pass go on to another write with new random numbers.

SET: At the end of a read pass go back and reread the same file again.

4.4 BREAKPOINT 4

RESET: Run without halts.

SET: Halt on a write error or at the end of a read pass. Clearing these halts will allow the program to continue.

USE: (cont.)

5.0 MESSAGES

The program will type or punch status messages at various times in the operation of the exercise. These are described below:

5.1 END OF PASS

At the end of a write or read pass the output will be either WRITE or READ, PASS DONE. This is followed by a carriage return and the following two lines:

```
WRITES   READS   WRITE ERR REWRITES BAD READS
aaaaaaaa bbbbbbbb cccccccc dddddddd eeeeeeee
```

where the a's represent the number of write passes in octal, the b's the number of read passes, the c's the number of write errors which have occurred, the d's the number rewrite errors, and the c's the number of records which were read erroneously 10 times.

5.2 REWRITE ERROR

If a write error is detected the program erases backward over the record and attempts to rewrite it. If this second attempt is also in error the program outputs the following counter titles:

WRITE PASS RECORD NO. WRITE ERRS REWRITE ERRS

This is followed on the same line by the mode of operation (Binary or BCD) the density and the unit number. On the next line below the appropriate title it outputs the write pass count, the write record number count, the write error count and the rewrite error count. All counts are in octal.

5.3 READ ERROR

If a read error occurs, the program rereads the record nine more times and then outputs the read pass, record number, mode, density, and unit number. This is followed by a carriage return, the message, READ ERROR, another carriage return and then nine, eight-octal-digit counters which represent the following quantities (from left to right): character parity error count, longitudinal parity error count, word count, error count, errors in channel 1, channel 2, etc., to channel 6. On the next line the program outputs a good or bad message for each of the 10 reads. This consists of the letter G if the read was correct or B if the read was incorrect.

USE: (cont.) For example:

B G G G B G G G G G

Indicates that the first and fifth reads were bad and all others were good.

5.4 READ PASS OUT OF SYNC

The first word of every record is the number of records preceding it on the tape. When each record is read, the program compares this first word with the read record count. If they disagree the program backspaces and rereads the record a second time, if they still disagree then the difference between them is computed and the program spaces over as many records as necessary to position itself in front of the correct record. If the first word of this record does not agree with the read record count after two attempts the program ends the read pass and outputs the following. As in a read error it outputs the read pass count, read record number, mode, density and unit number. This is followed by this message:

READ PASS ABORT, OUT OF SYNC.
aaaaaaaa bbbbbbbb

where the a's represent the first word of the first record read that did not agree with the read record count, and the b's represent the first word of the record read after spacing to what should have been the correct record. The program then goes to the end of read pass section where the end of pass output will be produced and from there on to another write or reread pass.

If a tape mark or the load point was encountered when spacing, the program terminates the read pass and outputs TAPE MARK before the other outputs. If it was the load point which was encountered it also outputs LOAD POINT. In either case the two words a and b will be the same since only one record was read.

5.5 FILE PROTECT ON

Before the program attempts to write on a tape it tests the file protect for that unit. If the file protect should be on, the program outputs: FILE PROTECT ON (Mode) (Density) UNIT NO. n. and returns to the keyboard mode.

METHOD: 1.0 WRITING

At the start of the write pass all units are rewound. The program then sets the tape control table for the lowest numbered unit and waits for it to be ready. As soon as this unit is ready a check is made to see if the tape is at

METHOD: (cont.) the loadpoint. If it is not,another rewind is given and the program waits until it is ready and at the load point. A three inch section of tape is erased before the first random number record is written. After writing this record on the first unit the control table is set to the next higher numbered unit and the record is written again. This continues until a record has been written on all units under test. The program then generates a new record of random numbers and starts writing this on all units.

1.1 WRITE ERROR

If a write error occurs the program erases backward to the front of this record and attempts to rewrite it. If this second attempt is also in error then the program outputs the rewrite error message. It then erases backward over the record again, erases it forward and attempts to write the record again on a new section of tape. An error here is considered a new write error and the process continues until a correct write is made.

1.2 END OF PASS

The write pass is concluded if one of two conditions occurs: Either the write record count reaches the maximum record count or an end of reel is encountered on any tape under test. When one of these occurs the program writes an end of file on all units and rewinds them. It then outputs the end of pass message and proceeds to the read pass.

2.0 READING

A read pass is similar to a write except that the program reads each record into memory and compares it with the random numbers which it regenerates for each read. The first record must be read starting from the load point. This insures that the tape is always positioned properly for the start of the pass.

2.1 READ ERRORS

When a read error occurs the program will always reread the record nine more times for a total of ten attempts regardless of whether or not a subsequent read was correct. It then outputs the results of these reads. Several conditions can cause a read error.

2.1.1 Character Parity Errors

The program counts a character parity error as any buffer error which occurs before the gap is reached.

METHOD: (cont.)

2.1.2 Longitudinal Parity Error

If no character parity errors have occurred before the gap is reached and the buffer error is on after the gap signal is detected, the program counts a longitudinal parity error.

2.1.3 Word Count Error

A word count error is defined as a record which was not of the length expected. The program tests for this in three ways. If more words than expected were read an I1 interrupt will occur because the interlace unit has been counted to zero. The program presets the last two words of the expected record buffer area to zero and checks to see that some information was read into these words. The third test is based on the fact that the program always writes records that consist of a multiple of four characters. Therefore if the buffer contains anything other than zero at the end of the read an error has occurred.

2.2 READ SYNCHRONIZATION

When each record is read the first word is compared against the program record count. If they disagree it means that the program and tape are no longer synchronized. To guard against a read error causing the disagreement, the program backspaces and reads the record again. If they still disagree then the program computes the number of records to be spaced over in order to reach the desired record and moves to that point. It reads the new record and again checks the first word. If this word disagrees with the record count and a second read attempt does not correct the disagreement then the program aborts the read pass and outputs the appropriate message. If a tape mark or the load point is encountered while spacing to the correct position the pass is aborted without further read attempts.

2.3 END OF FILE

If the program should receive an I2 interrupt before a gap signal is received then a check for end of file is made. If the interrupt was caused by the reading of a tape mark then the read pass is complete and appropriate messages are output. If there is no end of file signal after the I2 then the program assumes that the tape mark detector is not working and terminates the read pass anyway and outputs an END OF FILE READ ERROR message.

METHOD: 3.0 BCD MODE

In the BCD mode random numbers are generated and written the same as in binary. However, on the read pass all non compares between the generated number and the number from tape are checked to see if they are caused by the 12 to 00 conversion. This occurs because both the character 00 and the character 12 will be written on tape as a 12 but this character will always be read into memory as a 00.

```
*
00200  0 76 00250   MC00   LDA     G@MC01
00201  0 35 00001          STA     1
00202  0 46 30003   CLR    CLR
00203  0 35 00243          STA     ACCUM
00204  0 02 20004   MC01   DIR
00205  0 02 00100          DISY
00206  0 02 02001          RKBW    1,1
00207  0 32 00012          WIM     T1
00210  0 75 00012          LDB     T1
00211  0 66 20011          RCY     9
00212  0 75 01725          LDB     C1
00213  0 71 01743          LDX     C17
00214  2 70 00235          SKM     CTE,2
00215  0 41 00214          BRX     *-1
00216  0 02 00000          DISW
00217  2 01 40235          BRU*    CTE,2
*
00220  0 22 01011          B       B00          CONTROL CHARACTER TABLE
00221  0 23 00244          C       C00
00222  0 24 01007          D       D00
00223  0 44 01004          M       M00
00224  0 45 01001          N       N00
00225  0 46 00061          0       000
00226  0 47 00766          P       P00
00227  0 51 01025          R       R00
00230  0 62 00340          S       S00
00231  0 63 00763          T       T00
00232  0 64 00252          U       U00
00233  0 52 00202          CR      CLR
00234  0 12 00204          SP      MC01
00235  0 00 00236   CTE    PZE     DIGIT        CONTROL TABLE END
*
*
00236  0 67 20006   DIGIT  LCY     6            ACCUMULATE DIGIT
00237  0 75 00243          LDB     ACCUM
00240  0 67 20003          LCY     3
00241  0 36 00243          STB     ACCUM
00242  0 01 00204          BRU     MC01
*
00243  0 00 00000   ACCUM  PZE
```

```
*
00244  0 02 00000   COO    DISW
00245  0 51 00246          BRR     STOP
*
00246  0 00 00000   STOP   PZE
00247  0 40 20400          BPT     1
00250  0 01 00204   GOMCO1 BRU     MCO1
00251  0 51 00246          BRR     STOP
*
*
00252  0 71 01726   UOO    LDX     C3              CLEAR UNIT NO.
00253  3 76 00312          RPF     UNT+8.2         TABLE FLAGS.
00254  0 41 00253          BRX     *-1
00255  0 02 02001          RKBW    1.1
00256  0 32 00012   UO3    WIM     T1
00257  0 75 01746          LDB     C77
00260  0 76 00012          LDA     T1
00261  0 70 01745          SKM     C52             CARRIAGE RETURN
00262  0 01 00274          BRU     UO1             NO
00263  0 71 01726          LDX     C3              YES
00264  2 53 00312          SKN     UNT+8.2         ALL FLAGS IN UNIT
00265  0 01 00267          BRU     *+2             NO TABLE RESET
00266  0 01 00271          BRU     UO2             NO
00267  0 41 00264          BRX     *-3             IF YES:
00270  1 77 00302          SPF     UNT             SET UNIT NO. 0 FLAG
00271  0 76 01726   UO2    LDA     C3              RESET UNIT NO.
00272  0 35 00301          STA     UNTI            TABLE INDEX
00273  0 01 00204          BRU     MCO1
*
00274  0 14 01731   UO1    ETR     C7
00275  0 35 00012          STA     T1
00276  0 71 00012          LDX     T1
00277  3 77 00302          SPF     UNT.2
00300  0 01 00256          BRU     UO3
*
00301  0 00 00000   UNTI   PZE                     UNIT NO. TABLE INDEX
*
00302  00000000     UNT    OCT     0               UNIT NO. TABLE
00303  00000001            OCT     1
00304  00000002            OCT     2
00305  00000003            OCT     3
00306  00000004            OCT     4
00307  00000005            OCT     5
00310  00000006            OCT     6
00311  00000007            OCT     7
```

```
*
00312  0 00 00000   SU00   PZE                    STEP UNIT NO. SUBR.
00313  1 76 00207          RPF     SW4            R[SW4]
00314  0 71 00301          LDX     UNTI           ADVANCE AND TEST UNIT
00315  0 41 00320   SU02   BRX     SU01           NO. TABLE INDEX
00316  1 77 00207          SPF     SW4            INDEX DONE, S[SW4]
00317  0 71 01726          LDX     C3             RESET TABLE INDEX
00320  2 53 00312   SU01   SKN     UNT+8,2        TABLE ENTRY FLAG
00321  0 01 00315          BRU     SU02           RESET
00322  0 37 00301          STX     UNTI           SET, SAVE TABLE INDEX
00323  2 76 00312          LDA     UNT+8,2
00324  0 14 01731          ETR     C7
00325  0 35 00337          STA     UN
00326  0 71 01654          LDX     TCTE           NEGATIVE TAPE CONTROL TABLE LENGTH
00327  2 76 01654          LDA     TCTE,2         MODIFY TAPE UNIT NO.S
00330  0 14 01726          ETR     C4
00331  0 16 00337          MRG     UN
00332  2 35 01654          STA     TCTE,2
00333  0 41 00327          BRX     *-4
00334  0 53 00207          SKN     SW4
00335  0 61 00312          MIN     SU00
00336  0 51 00312          BRR     SU00
*
00337  0 00 00000   UN     PZE                    UNIT NUMBER
*
*
00340  0 46 30003   S00    CLR                    START
00341  0 71 01703          LDX     ECTL           CLEAR COUNTERS
00342  2 35 01703          STA     ECTL,2
00343  0 41 00342          BRX     *-1
00344  0 76 01655          LDA     IRN
00345  0 35 01656          STA     IRN
00346  0 76 01736          LDA     C12            COMPUTE MEMORY SIZE
00347  0 35 13777          STA     6143
00350  0 72 13777          SKA     6143
00351  0 01 00357          BRU     S01
00352  0 66 00001          RSH     1
00353  0 35 07777          STA     4095
00354  0 72 07777          SKA     4095
00355  0 01 00357          BRU     S01
00356  0 66 00001          RSH     1
00357  0 35 00404   S01    STA     RLM            SAVE RECORD LENGTH MASK
00360  0 01 00412          BRU     W00
```

```
*
*              COMPUTE RECORD LENGTH SUBROUTINE.
*
00361  0 00 00000   CRLS   PZE
00362  0 75 00403          LDB     STRN
00363  0 67 20012          LCY     10
00364  0 76 01660          LDA     RRN
00365  0 14 00404          ETR     RLM
00366  0 73 01751          SKG     TWO
00367  0 55 01752          ADD     THREE
00370  0 35 00410          STA     RL
00371  0 66 00012          RSH     10
00372  0 36 00407          STB     LDIL
00373  0 16 00405          MRG     SHBC
00374  0 35 00406          STA     SHIB
00375  0 46 30003          CLR
00376  0 54 00410          SUB     RL
00377  0 35 00411          STA     NRL
00400  0 71 00411          LDX     NRL
00401  0 76 00410          LDA     RL
00402  0 51 00361          BRR     CRLS
*
00403  2 35 01776   STRN   STA     IMAG.2
00404  0 00 00000   RLM    PZE                  RECORD LENGTH MASK
00405  0 02 10100   SHBC   EQM     10100                                YBUF
*
                    CIL    OPD     250100                               YBUF
00406  0 00 00000   SHIB   PZE                  SET HIGH INTERLACE BITS
00407  0 00 00000   LDIL   PZE                  LOAD INTERLACE
*
00410  0 00 00000   RL     PZE                  RECORD LENGTH
00411  0 00 00000   NRL    PZE                  NEGATIVE RECORD LENGTH
```

```
*
*              START WRITE PASS.
*
00412  1 76 00203   W00     RPF      RPPF              R[RPPF]
00413  0 43 00656            BRM      RWAU              REWIND ALL UNITS
00414  1 77 00200            SPF      SBF
00415  1 76 00201            RPF      ETF
00416  0 46 30003            CLR                        CLEAR WRITE RECORD COUNT
00417  0 35 01663            STA      WRC
00420  0 76 01656            LDA      IRN
00421  0 35 01660            STA      RRN
00422  0 43 00361   W04      BRM      CRLS              GET RECORD LENGTH
00423  0 55 00403            ADD      STRN
00424  0 35 00432            STA      W04A
00425  0 76 01663            LDA      WRC
00426  0 35 01776            STA      IMAG
00427  0 46 30003            CLR
00430  0 76 01660            LDA      RRN               GENERATE RANDOM NUMBERS
00431  0 41 00432            BRX      *+1
00432  2 35 00000   W04A     STA      **,2
00433  0 67 00013            LSH      11
00434  0 55 40432            ADD*     W04A
00435  0 55 01661            ADD      KK
00436  0 41 00432            BRX      W04A
00437  0 35 01660            STA      RRN
00440  1 76 00212   W04B     RPF      WEF               R[WRITE ERROR FLAG]
00441  1 76 00204            RPF      SWI               R[SWI]
00442  0 43 00702   W05      BRM      TRSUBR            TAPE READY
00443  0 23 01651            EXU      FPT               FILE PROTECT ON
00444  0 01 00641            BRU      FPE               YES
00445  0 53 00212            SKN      WEF               NO. PREVIOUS WRITE ERROR
00446  0 53 00200            SKN      SBF               NO. IS THIS THE FIRST BLOCK
00447  0 01 00467            BRU      W06               YES. NO
00450  0 23 01652            EXU      BTT               YES. LOAD POINT
00451  0 01 00454            BRU      *+3               YES
00452  0 23 01644            EXU      REW               NO
00453  0 01 00442            BRU      W05
00454  0 71 01730            LDX      C6                ERASE STARTING LEADER
00455  2 23 01650            EXU      DBT+1,2
00456  0 01 00461            BRU      *+3
00457  0 41 00455            BRX      *-2
00460  0 01 00442            BRU      W05
00461  0 02 50100            CILY                                                  YBUF
00462  2 13 00541            PBT      E800+1,2
00463  0 23 01640            EXU      ET                START ERASE
00464  0 40 12710            TGTY                       GAP                        YBUF
00465  0 01 00467            BRU      W06               YES
00466  0 01 00464            BRU      *-2               NO
```

```
*
00467  0 02 50100   W06    CILY                          WRITE RECORD                    YBUF
00470  0 23 00406          EXU     SHIB
00471  0 13 00407          POT     LDIL
00472  0 23 01635          EXU     WT
00473  0 43 00674          BRM     BRSUBR
00474  0 23 01653          EXU     ETT                   END OF TAPE
00475  1 77 00201          SPF     ETF                   YES
00476  0 40 20020          BETY                          NO.ERROR                        YBUF
00477  0 01 00541          BRU     W01                   YES
00500  0 43 00246          BRM     STOP                  NO
00501  0 43 00312   W07    BRM     SU00                  STEP UNIT NO.
00502  0 01 00504          BRU     *+2                   DONE
00503  0 01 00440          BRU     W04B                  CONTINUE
00504  1 76 00200          RPF     SBF                   R[STARTING BLOCK FLAG]
00505  0 61 01663   W03    MIN     WRC
00506  0 76 01662          LDA     MRC
00507  0 53 00201          SKN     ETF                   END OF TAPE FLAG
00510  0 73 01663          SKG     WRC                   RESET. ENOUGH RECORDS
00511  0 01 00513          BRU     *+2                   SET. YES
00512  0 01 00422          BRU     W04                   NO
00513  0 43 00246          BRM     STOP
00514  0 43 00702   W03A   BRM     TRSUBR                WRITE EOF'S
00515  0 23 01637          EXU     WEOF
00516  0 10 00535          MIY     EOFC                                                  YBUF
00517  0 02 14100          TOPY                                                          YBUF
00520  0 43 00674          BRM     BRSUBR
00521  0 43 00702          BRM     TRSUBR
00522  0 23 01644          EXU     REW                   REWIND
00523  0 43 00312          BRM     SU00                  STEP UNIT NO.
00524  0 01 00526          BRU     *+2
00525  0 01 00514          BRU     W03A
00526  0 61 01665          MIN     WPC
00527  0 43 00246          BRM     STOP
00530  0 40 20200          BPT     2
00531  0 01 00533          BRU     *+2
00532  0 43 00714          BRM     OPCS                  OUTPUT PASS COUNTERS
00533  0 43 00246          BRM     STOP
00534  0 01 01025          BRU     R00                   TO START READ
*
00535  17000000     EOFC   OCT     17000000              TAPE MARK
00536  11300000     E200   DEC     150B9
00537  32040000     E556   DEC     417B9
00540  37777777     E800   DEC     600B9
```

```
*
*              WRITE ERROR SUBROUTINE.
*
00541  0 43 00702   W01     BRM     TRSUBR          BACKSPACE AND ERASE RECORD
00542  0 02 50100           CILY                                            YBUF
00543  0 23 00406           EXU     SHIB
00544  0 13 00407           PBT     LDIL
00545  0 23 01641           EXU     ETR
00546  0 43 00674           BRM     BRSUBR
00547  1 77 00212           SPF     WEF             S(WRITE ERROR FLAG)
00550  0 43 00246           BRM     STOP
00551  0 53 00204           SKN     SW1
00552  0 01 00614           BRU     W01A            FIRST TIME
00553  0 61 01670           MIN     RWEC            SECOND TIME
00554  0 40 20200           BPT     2
00555  0 01 00572           BRU     W01B
00556  0 23 01000           EXU     BUT4
00557  0 71 01743           LDX     C17             -13
00560  2 12 00634           MIW     WEM+13,2
00561  0 41 00560           BRX     *-1
00562  0 43 01602           BRM     BMAUN
00563  0 71 01740           LDX     C14             -4
00564  2 76 00640           LDA     WEW+4,2
00565  0 75 01753           LDB     KEY
00566  0 43 00040           BRM     WBS
00567  0 41 00564           BRX     *-3
00570  0 02 14000           TBPW
00571  0 43 00674           BRM     BRSUBR
00572  0 40 20040   W01B    BPT     4
00573  0 00 00000           HLT
00574  0 43 00246           BRM     STOP
00575  1 76 00204           RPF     SW1
00576  0 43 00702           BRM     TRSUBR
00577  0 02 50100           CILY                    ERASE RECORD            YBUF
00600  0 23 00406           EXU     SHIB
00601  0 13 00407           PBT     LDIL
00602  0 23 01640           EXU     ET
00603  0 40 12710           TGTY                                            YBUF
00604  0 01 00606           BRU     *+2
00605  0 01 00603           BRU     *-2
00606  0 23 01653           EXU     ETT
00607  0 01 00611           BRU     *+2
00610  0 01 00467           BRU     W06
00611  0 43 00674           BRM     BRSUBR
00612  1 77 00201           SPF     ETF
00613  0 01 00501           BRU     W07
```

```
*
00614  1 77 00204   WO1A   SPF     SW1                 S[SW1]
00615  0 61 01667          MIN     WEC
00616  0 01 00442          BRU     WOS
*
*
00617  52121266     WEM    BCI     13.   WRITE PASS  RECORD NO.  WRITE ERRS  REWRITE ERRS
00634  0 00 01665   WEW    PZE     WPC
00635  0 00 01663          PZE     WRC
00636  0 00 01667          PZE     WEC
00637  0 00 01670          PZE     RWEC
00640  52121212     SCRC   OCT     52121212
*
00641  0 23 01000   FPE    EXU     BUT4                FILE PROTECT ERROR
00642  0 71 01727          LDX     C5                  -5
00643  2 12 00656          MIW     FPM+5,2
00644  0 41 00643          BRX     *-1
00645  0 43 01602          BRM     BMAUN
00646  0 02 14000          TBPW
00647  0 43 00674          BRM     BRSUBR
00650  0 01 00204          BRU     MC01
*
00651  52121226     FPM    BCI     5.   FILE PROTECT ON
```

```
*
*               REWIND ALL UNITS
*
00656  0 00 00000   RWAU   PZE
00657  0 02 14110           REWY    0                                    YBUF
0066C  0 02 14111           REWY    1                                    YBUF
00661  0 02 14112           REWY    2                                    YBUF
00662  0 02 14113           REWY    3                                    YBUF
00663  0 02 14114           REWY    4                                    YBUF
00664  0 02 14115           REWY    5                                    YBUF
00665  0 02 14116           REWY    6                                    YBUF
00666  0 02 14117           REWY    7                                    YBUF
00667  0 71 01735           LDX     C11     PRESET UNIT NO. TABLE INDEX
0067C  0 37 00301           STX     UNTI
00671  0 43 00312           BRM     SUOO    SET UP FIRST UNIT.
00672  0 20 00000           NOP
00673  0 51 00656           BRR     RWAU
*
*               BUFFERS READY SUBROUTINE.
*
00674  0 00 00000   BRSUBR PZE
00675  0 40 21000           BRTW
00676  0 01 00675           BRU     *-1
00677  0 40 22000           BRTY
00700  0 01 00677           BRU     *-1
00701  0 51 00674           BRR     BRSUBR
*
*               TAPE UNIT READY SUBROUTINE.
*
00702  0 00 00000   TRSUBR PZE
00703  0 23 01650           EXU     TRT
00704  0 51 00702           BRR     TRSUBR
00705  0 01 00703           BRU     *-2
*
*               CLEAR ERROR COUNTERS SUBROUTINE.
*
00706  0 00 00000   CECS   PZE
00707  0 46 30003           CLR
0071C  0 71 01741           LDX     C15     -6
00711  2 35 01703           STA     ECTL.2
00712  0 41 00711           BRX     *-1
00713  0 51 00706           BRR     CECS
```

```
*
*              OUTPUT PASS COUNTERS SUBROUTINE.
*
00714  0 00 00000   OPCS   PZE
00715  0 23 01000          EXU     OUT4
00716  0 53 00203          SKN     RPPF                READ PASS
00717  0 01 00723          BRU     *+4                 NO
00720  0 12 00640          MIW     SCRC                YES
00721  0 12 00752          MIW     PDM+6               READ
00722  0 01 00725          BRU     *+3
00723  0 12 00747          MIW     PDM+3               WRITE
00724  0 12 00750          MIW     PDM+4
00725  0 71 01744          LDX     C18                 -15
00726  2 12 00763          MIW     PDM+15.2            PASS DONE
00727  0 41 00726          BRX     *-1
00730  0 02 14000          TOPW
00731  0 43 00674          BRM     BRSUBR
00732  0 23 00777          EXU     OUT1
00733  0 71 01727          LDX     C5                  -5
00734  2 76 01714   OPCS1  LDA     OPCL+5.2
00735  0 75 00024          LDB     KEY1
00736  0 43 00040          BRM     WOS
00737  0 41 00734          BRX     OPCS1
00740  0 12 00640          MIW     SCRC
00741  0 02 14000          TOPW
00742  0 43 00674          BRM     BRSUBR
00743  0 51 00714          BRR     OPCS
*
*
00744  12472162     PDM    BCI      PASS DONE     WRITES   READS  WRITE ERR REWRITES BAD RE
00762  21246252            BCI     1.ADS
```

```
*
*               SET PUNCH OR TYPE.
*
00763  0 76 00773   TOO    LDA     TOUT1           SET TYPE
00764  0 75 00774           LDB     TOUT4
00765  0 01 00770           BRU     POC+2
00766  0 76 00775   POO    LDA     POUT1           SET PUNCH
00767  0 75 00776           LDB     POUT4
00770  0 35 00777           STA     OUT1
00771  0 36 01000           STB     OUT4
00772  0 01 00204           BRU     MC01
*
00773  0 02 02041   TOUT1   TYPW    1,1
00774  0 02 02641   TOUT4   TYPW    1,4
00775  0 02 02044   POUT1   PPTW    1,1
00776  0 02 02644   POUT4   PPTW    1,4
*
00777  0 00 00000   OUT1    PZE
01000  0 00 00000   OUT4    PZE
*
*               SET INITIAL RANDOM NUMBER.
*
01001  0 76 00243   NOO    LDA     ACCUM
01002  0 35 01655           STA     IRN
01003  0 01 00202           BRU     CLR
*
*               SET MAXIMUM NUMBER OF RECORDS.
*
01004  0 76 00243   MOO    LDA     ACCUM
01005  0 35 01662           STA     MRC
01006  0 01 00202           BRU     CLR
*
*               SET BCD OR BINARY MODE.
*
01007  1 77 00210   DOO    SPF     BCDF            SET BCD FLAG
01010  0 01 01012           BRU     *+2
01011  1 76 00210   BOO    RPF     BCDF            RESET BCD FLAG
01012  0 76 01636           LDA     RT
01013  0 14 01022           ETR     BB1
01014  0 53 00210           SKN     BCDF
01015  0 16 01023           MRG     BB2
01016  0 35 01636           STA     RT
01017  0 16 01024           MRG     BB3
01020  0 35 01635           STA     WT
01021  0 01 00204           BRU     MC01
*
01022  77776777      BB1    BCT     77776777
01023  00001000      BB2    BCT     1000
01024  00000040      BB3    BCT     40
```

```
*
*              START READ PASS.
*
01025  1 77 00203   ROO     SPF     RPPF            S[READ PASS IN PROGRESS FLAG]
01026  0 76 01656             LDA     IRN             1ST RANDOM NUMBER TO
01027  0 35 01657             STA     RRNH            RANDOM NUMBER HOLD.
01030  0 43 00656             BRM     RWAU            REWIND ALL UNITS
01031  1 77 00200             SPF     SBF             S[STARTING BLOCK FLAG]
01032  0 46 30003             CLR
01033  0 35 01664             STA     RRC
01034  0 76 01334             LDA     GORI1           INITIALIZE INTERRUPTS
01035  0 35 00030             STA     I1Y                                     YBUF
       00030   I1Y     BOOL    30                                              YBUF
01036  0 76 01335             LDA     GORI2
01037  0 35 00032             STA     I2Y                                     YBUF
       00032   I2Y     BOOL    32                                              YBUF
01040  1 76 00204   RO7     RPF     SW1             R[SW1.SW2]
01041  1 76 00205             RPF     SW2
01042  1 76 00213             RPF     SYNCF           R[SYNC FLAG]
01043  1 76 00206   RO8     RPF     SW3             R[SW3.REF]
01044  1 76 00202             RPF     REF
01045  1 76 00211             RPF     CPEF            R[CHARACTER PARITY ERROR FLAG]
01046  0 76 01657             LDA     RRNH            MOVE RANDOM NUMBER FROM
01047  0 35 01660             STA     RRN             HOLD TO RUN.
01050  0 43 00361             BRM     CRLS            COMPUTE RECORD LENGTH
01051  0 71 00410             LDX     RL
01052  0 46 30003             CLR                     CLEAR LAST WORD IN IMAGE
01053  2 35 01775             STA     IMAG-1,2
01054  2 35 01774             STA     IMAG-2,2        CLEAR NEXT TO LAST WORD
01055  0 43 00702   RO1     BRM     TRSUBR
01056  0 53 00200             SKN     SBF             STARTING BLOCK
01057  0 01 01064             BRU     RO1A            NO
01060  0 23 01652             EXU     BTT             YES. LOAD POINT
01061  0 01 01064             BRU     RO1A            YES
01062  0 23 01644             EXU     REW             NO. REWIND
01063  0 01 01055             BRU     RO1
01064  0 02 50100   RO1A    CILY                    START READ                      YBUF
01065  0 23 00406             EXU     SHIB
01066  0 13 00407             PBT     LDIL
01067  0 23 01636             EXU     RT
01070  0 02 20002             EIR
01071  0 40 20020             BETY                    ERROR                           YBUF
01072  0 01 01076             BRU     RO1B            YES
01073  0 40 12710   RO1D    TGTY                    NO.GAP                          YBUF
01074  0 01 01106             BRU     RO1C            YES
01075  0 01 01071             BRU     *-4             NO
```

```
*
01076  0 40 12710   R01B   TGTY                      GAP                                  YBUF
01077  0 01 01106          BRU     R01C              YES
01100  0 53 00202          SKN     REF               NO. FIRST ERROR
01101  0 01 01103          BRU     *+2               YES
01102  0 01 01073          BRU     R01D              NO
01103  1 77 00202          SPF     REF               S[READ ERROR FLAG]
01104  1 77 00211          SPF     CPEF              S[CHARACTER PARITY ERROR FLAG]
01105  0 01 01073          BRU     R01D
*
01106  0 02 20004   R01C   DIR
01107  0 53 00202   R03    SKN     REF               PREVIOUS ERROR
01110  0 01 01115          BRU     *+5               NO
01111  0 53 00211          SKN     CPEF              YES. CHARACTER PARITY
01112  0 01 01122          BRU     R03A              NO
01113  0 61 01672          MIN     CPEC              YES. COUNT CHARACTER PARITY
01114  0 01 01122          BRU     R03A
01115  0 40 20020          BETY                                                           YBUF
01116  0 01 01120          BRU     *+2               YES
01117  0 01 01122          BRU     R03A              NO
01120  1 77 00202          SPF     REF
01121  0 61 01673          MIN     LPEC              COUNT LONGITUDINAL PARITY
01122  0 76 01664   R03A   LDA     RRC
01123  0 75 00026          LDB     ONES
01124  0 70 01776          SKM     IMAG              1ST WORD:RECORD COUNT
01125  0 01 01336          BRU     R05               NOT EQUAL
01126  0 71 00411   R12    LDX     NRL               EQUAL. CHECK NUMBERS
01127  0 76 01750          LDA     EORN
01130  0 55 00410          ADD     RL
01131  0 35 01135          STA     R12A
01132  0 46 30003          CLR
01133  0 76 01660          LDA     RRN
01134  0 41 01135          BRX     *+1
01135  2 17 00000   R12A   EOR     **,2              COMPARE WORDS
01136  0 72 00026          SKA     ONES              CORRECT
01137  0 01 01167          BRU     R12B              NO
01140  0 76 01660          LDA     RRN               YES. GENERATE NEXT NUMBER
01141  0 67 00013          LSH     11
01142  0 55 01660          ADD     RRN
01143  0 55 01661          ADD     KK
01144  0 35 01660          STA     RRN
01145  0 41 01135          BRX     R12A
```

```
*
01146  0 43 00674          BRM     BRSUBR          WAIT FOR TAPE TO STOP
01147  0 30 00012          YIM     T1                                      YOUF
0114C  0 76 00026          LDA     ONES
01151  0 71 00026          LDX     ONES
01152  0 72 41135          SKA*    R12A            LAST WORD:0
01153  0 01 01156          BRU     *+3             NOT EQUAL
01154  2 77 37777          EAX     16383.2         EQUAL
01155  0 72 41135          SKA*    R12A            NEXT TO LAST WORD:0
01156  0 72 00012          SKA     T1              NOT EQUAL.[BUFFER]:0
01157  0 01 01162          BRU     *+3             EQUAL. NOT EQUAL
0116C  0 53 00206          SKN     SW3             EQUAL. TEST SW3
01161  0 01 01164          BRU     *+3             RESET
01162  1 77 00202          SPF     REF             SET. S[REF]
01163  0 61 01674          MIN     WCEC            WORD COUNT ERROR COUNTER + 1
01164  0 53 00204          SKN     SW1             NO. TEST SW1
01165  0 01 01221          BRU     R04             RESET
01166  0 01 01247          BRU     R09             SET
*
*
01167  0 72 01746  R12B    SKA     C77             CHARACTER CORRECT
0117C  0 01 01172          BRU     *+2             NO
01171  0 01 01215          BRU     R12D            YES
01172  0 53 00210          SKN     BCDF            IN BCD MODE
01173  0 01 01200          BRU     R12C            NO
01174  0 75 01746          LDB     C77             YES. WAS ERROR DUE TO 0
01175  0 70 01734          SKM     C10             TO 12 CONVERSION
01176  0 01 01200          BRU     *+2             NO
01177  0 01 01215          BRU     R12D            YES
0120C  1 77 00202  R12C    SPF     REF
01201  0 72 00024          SKA     ONE             TEST LSB ERROR
01202  0 61 01702          MIN     CH6
01203  0 72 01751          SKA     TWO
01204  0 61 01701          MIN     CH5
01205  0 72 01753          SKA     FOUR
01206  0 61 01700          MIN     CH4
01207  0 72 01754          SKA     EIGHT
0121C  0 61 01677          MIN     CH3
01211  0 72 01755          SKA     ZA
01212  0 61 01676          MIN     CH2
01213  0 72 01756          SKA     ZB              TEST MSB ERROR
01214  0 61 01675          MIN     CH1
01215  0 46 20005  R12D    ABC                     SHIFT CHARACTER
01216  0 66 20006          RCY     6
01217  0 46 10012          BAC
0122C  0 01 01136          BRU     R12A+1
```

```
*
01221  0 53 00202   R04    SKN     REF             WAS THERE A READ ERROR
01222  0 01 01234          BRU     R11             NO
01223  0 76 00024          LDA     ONE             YES
01224  0 35 01332          STA     RTEM
01225  0 35 01333          STA     RTC
01226  1 77 00204          SPF     SW1
01227  0 43 00702   R10    BRM     TRSUBR          BACKSPACE RECORD
01230  0 23 01643          EXU     SR
01231  0 43 00674          BRM     BRSUBR
01232  0 43 00246          BRM     STOP
01233  0 01 01043          BRU     R08
*
01234  0 43 00312   R11    BRM     SUOO            STEP UNIT NUMBER
01235  0 01 01240          BRU     *+3             DONE
01236  0 43 00246   R11A   BRM     STOP            CONTINUE
01237  0 01 01040          BRU     R07
01240  0 61 01664          MIN     RRC             READ RECORD COUNT + 1
01241  0 76 01660          LDA     RRN
01242  0 35 01657          STA     RRNH
01243  0 53 00200          SKN     SBF             IF STARTING BLOCK FLAG
01244  0 01 01236          BRU     R11A            SET RESET IT
01245  1 76 00200          RPF     SBF
01246  0 01 01236          BRU     R11A
*
*
01247  0 46 30003   R09    CLR
01250  0 76 01333          LDA     RTC
01251  0 67 00001          LSH     1
01252  0 35 01333          STA     RTC
01253  0 53 00202          SKN     REF             READ ERROR
01254  0 01 01257          BRU     *+3             NO
01255  0 16 01332          MRG     RTEM            YES. MARK ERROR THIS TRY
01256  0 35 01332          STA     RTEM
01257  0 72 01732          SKA     C8              TEN TRIES COMPLETE
01260  0 01 01262          BRU     *+2             YES
01261  0 01 01227          BRU     R10             NO
01262  0 76 01733          LDA     C9
01263  0 73 01332          SKG     RTEM            ANY GOOD READS
01264  0 61 01671          MIN     PREC            NO
01265  0 40 20200          BPT     2               YES. OUTPUT
01266  0 01 01322          BRU     R09A            NO
01267  0 43 01562          BRM     RSO             YES. OUTPUT READ STATUS
01270  0 23 01000          EXU     OUT4
01271  0 71 01730          LDX     C6
01272  2 12 01327          MIW     REM+3,2         OR READ ERROR OR
01273  0 41 01272          BRX     *-1
01274  0 02 14000          TOPW
```

```
*
01276  0 23 00777          EXU     BUT1
01277  0 71 01735          LDX     C11             -9
01300  2 76 01725          LDA     RECL+9,2
01301  0 75 00024          LDB     KEY1
01302  0 43 00040          BRM     WBS
01303  0 41 01300          BRX     *-3
01304  0 12 00640          MIW     SCRC            CR
01305  0 71 01737          LDX     C13
01306  0 76 01332          LDA     RTEM
01307  0 72 00024          SKA     BNE             TRY GOOD
01310  0 01 01313          BRU     *+3             NO
01311  0 12 01327          MIW     GCHAR           YES
01312  0 01 01314          BRU     *+2
01313  0 12 01330          MIW     BCHAR
01314  0 12 01331          MIW     SPCHAR
01315  0 66 00001          RSH     1
01316  0 41 01307          BRX     *-7
01317  0 02 14000          TSPW
01320  0 43 00674          BRM     BRSUBR
01321  0 43 00706          BRM     CECS            CLEAR ERROR COUNTERS
01322  0 43 00246  RD9A    BRM     STOP
01323  0 01 01234          BRU     R11
*
*
01324  52512521     NEM     BCI     3, READ ERROR
*
01327  27121212     GCHAR   BCI     1,G
01330  22121212     BCHAR   BCI     1,B
01331  12121212     SPCHAR  BCI     1,
*
01332  0 00 00000   RTEM    PZE                     READ TRY ERROR MARKER
01333  0 00 00000   RTC     PZE                     READ TRY COUNTER
*
01334  0 43 01513   GOR11   BRM     R11
01335  0 01 01520   GOR12   BRU     R12
```

```
*
01336  0 53 00210  ROS    SKN     BCDF     BCD MODE
01337  0 01 01361         BRU     ROSB     NO
01340  0 76 01734         LDA     C10      YES
01341  0 75 01746         LDB     C77      FOR ANY 12 IN THE RRC
01342  0 70 01664  ROSA   SKM     RRC      CONVERT THE CORRESPONDING
01343  0 01 01350         BRU     *+5      OO IN THE ID WORD TO 12.
01344  0 35 00014         STA     T3
01345  0 16 01776         MRG     IMAG
01346  0 35 01776         STA     IMAG
01347  0 76 00014         LDA     T3
01350  0 67 00006         LSH     6
01351  0 72 00024         SKA     BNE      DONE
01352  0 01 01354         BRU     *+2      YES
01353  0 01 01342         BRU     ROSA     NO
01354  0 76 01664         LDA     RRC
01355  0 75 00026         LDB     BNES
01356  0 70 01776         SKM     IMAG     CORRECTED 1ST WORD:RRC
01357  0 01 01361         BRU     ROSB     NOT EQUAL
01360  0 01 01126         BRU     R12      EQUAL
01361  0 53 00213  ROSB   SKN     SYNCF    1ST TRY
01362  0 01 01424         BRU     ROSG     YES
01363  0 53 00205         SKN     SW2      NO. TEST SW 2
01364  0 01 01366         BRU     *+2      RESET
01365  0 01 01452         BRU     R13      SET
01366  0 54 01776         SUB     IMAG     N = RRC - 1ST WORD
01367  0 54 00024         SUB     BNE      N = N - 1
01370  0 75 01776  IMAGL  LDB     IMAG     SAVE 1ST WORD
01371  0 36 01427  SAVEL  STB     SAVE
01372  0 43 00674         BRM     BRSUBR
01373  0 72 00026         SKA     BNES     N = 0
01374  0 01 01377         BRU     *+3      NOT EQUAL
01375  1 77 00205  ROSC   SPF     SW2      EQUAL
01376  0 01 01042         BRU     RO8-1
01377  0 72 00025         SKA     SIGN     N : 0
01400  0 01 01412         BRU     ROSD     LESS
01401  0 43 00702  ROSE   BRM     TRSUBR   GREATER. SPACE FORWARD
01402  0 23 01642         EXU     SF
01403  0 30 00012         YIM     T1                                YBUF
01404  0 40 13710         TFTY                END OF FILE           YBUF
01405  0 01 01430         BRU     R15      YES
01406  0 54 00024         SUB     BNE      NO
01407  0 72 00026         SKA     BNES     DONE
01410  0 01 01402         BRU     ROSE+1   NO
01411  0 01 01422         BRU     ROSF     YES
```

```
*
01412  0 43 00702   RO5D   BRM    TRSUBR
01413  0 23 01643          EXU    SR
01414  0 30 00012          YIM    T1                                    YOUF
01415  0 23 01652          EXU    ATT     LOAD POINT
01416  0 01 01430          BRU    R15     YES
01417  0 55 00024          ADD    ONE     NO
0142C  0 72 00025          SKA    SIGN    DONE
01421  0 01 01413          BRU    RO5D+1  NO
01422  0 43 00674   RO5F   BRM    BRSUBR  YES
01423  0 01 01375          BRU    RO5C
*
01424  1 77 00213   RO5G   SPF    SYNCF   SISYNC. FLAG1
01425  0 43 00674          BRM    BRSUBR  WAIT FOR TAPE TO STOP
01426  0 01 01227          BRU    R10     BACKSPACE AND READ AGAIN
*
01427  0 00 00000   SAVE   PZE            TO HOLD 1ST WORD
```

```
*
01430  0 43 00674   R15    BRM     BRSUBR
01431  0 40 13710          TFTY                    END OF FILE                    YBUF
01432  0 01 01434          BRU     *+2             YES
01433  0 01 01442          BRU     R15A            NO
01434  0 23 01000          EXU     OUT4
01435  0 12 01475          MIW     TMM
01436  0 12 01476          MIW     TMM+1
01437  0 12 01477          MIW     TMM+2
0144C  0 02 14000          TOPW
01441  0 43 00674          BRM     BRSUBR
01442  0 23 01652   R15A   EXU     BTT             LOAD POINT
01443  0 01 01445          BRU     *+2             YES
01444  0 01 01452          BRU     R13             NO
01445  0 23 01000          EXU     OUT4
01446  0 12 01500          MIW     LPM
01447  0 12 01501          MIW     LPM+1
0145C  0 12 01502          MIW     LPM+2
01451  0 02 14000          TOPW
01452  0 43 00674   R13    BRM     BRSUBR
01453  0 43 01562          BRM     RSO             OUTPUT READ STATUS
01454  0 23 01000          EXU     OUT4
01455  0 71 01726          LDX     C3              -8
01456  2 12 01513          MIW     RPAM+8,2        READ PASS ABORT MESSAGE
01457  0 41 01456          BRX     *-1
0146C  0 02 14000          TOPW
01461  0 43 00674          BRM     BRSUBR
01462  0 76 01371          LDA     SAVEL
01463  0 75 01753          LDB     KEY
01464  0 23 00777          EXU     OUT1
01465  0 43 00040          BRM     WBS
01466  0 76 01370          LDA     IMAGL
01467  0 75 01753          LDB     KEY
0147C  0 43 00040          BRM     WBS
01471  0 12 00640          MIW     SCRC
01472  0 02 14000          TOPW
01473  0 43 00674          BRM     BRSUBR
01474  0 01 01537          BRU     R14
*
01475  52632147   TMM    BCI     3, TAPE MARK
0150C  52434621   LPM    BCI     3, LOAD POINT
01503  52512521   RPAM   BCI     8, READ PASS ABORT, OUT OF SYNC.
```

```
*              READ I1 INTERRUPT.
*
01513  0 00 00000   RI1    PZE
01514  0 02 13710          SRRY                                    YBUF
01515  0 30 00012          YIM     TI                              YBUF
01516  1 77 00206          SPF     SW3             S(SW 3)
01517  0 01 41513          BRU*    RI1
*
*              READ I2 INTERRUPT.
*
01520  0 02 20004   RI2    DIR
01521  0 30 00012          YIM     TI                              YBUF
01522  0 01 41523          BRU*    *+1             CLEAR INTERRUPT
01523  0 00 01524          PZE     *+1
01524  0 40 13710          TFTY                    END OF FILE     YBUF
01525  0 01 01537          BRU     R14             YES
01526  0 40 20200          BPT     2               NO
01527  0 01 01537          BRU     R14
01530  0 43 01562          BRM     RSO             OUTPUT READ STATUS
01531  0 23 01000          EXU     OUT4
01532  0 71 01741          LDX     C15             -6
01533  2 32 01562          WIM     EFREM+6,2
01534  0 41 01533          BRX     *-1
01535  0 02 14000          TOPW
01536  0 43 00674          BRM     BRSUBR
01537  0 43 00656   R14    BRM     RWAU            REWIND ALL UNITS
01540  0 61 01666          MIN     RPC             COUNT READ PASS
01541  0 40 20200          BPT     2
01542  0 01 01544          BRU     *+2
01543  0 43 00714          BRM     OPCS            OUTPUT PASS COUNTERS
01544  0 40 20040          BPT     4               HALT
01545  0 00 00000          HLT                     YES
01546  0 43 00246          BRM     STOP            NO
01547  0 40 20100          BPT     3               REREAD
01550  0 01 01025          BRU     ROO             YES
01551  0 76 01660          LDA     RRN             NO
01552  0 35 01656          STA     IRN
01553  0 01 00412          BRU     WOO             GO TO WRITE
*
*
01554  52254524    EFREM  BCI     6. END OF FILE READ ERROR
```

```
*
*              READ STATUS OUTPUT SUBROUTINE.
*
01562  0 00 00000   RSO     PZE
01563  0 23 01000           EXU     OUT4
01564  0 71 01741           LDX     C15                 -6
01565  2 12 01765           MIW     RSOM1+6,2
01566  0 41 01565           BRX     *-1
01567  0 43 01602           BRM     OMAUN
0157C  0 76 01710           LDA     RPCL
01571  0 75 00024           LDB     KEY1
01572  0 43 00040           BRM     WOS
01573  0 76 01706           LDA     RRCL
01574  0 75 01753           LDB     KEY
01575  0 43 00040           BRM     WOS
01576  0 12 00640           MIW     SCRC
01577  0 02 14000           TOPW
0160C  0 43 00674           BRM     BRSUBR
01601  0 51 01562           BRR     RSO
*
01602  0 00 00000   OMAUN   PZE                         OUTPUT MODE AND UNIT NO. SUBR
01603  0 53 00210           SKN     BCDF                BCD MODE
01604  0 01 01607           BRU     *+3                 NO
01605  0 12 01765           MIW     RSOM2               YES
01606  0 01 01611           BRU     *+3
01607  0 12 01766           MIW     RSOM3
0161C  0 12 01767           MIW     RSOM3+1
01611  0 71 01730           LDX     C6                  -3
01612  2 23 01650           EXU     DOT+1,2             TEST FOR DENSITY
01613  0 01 01615           BRU     *+2
01614  0 41 01612           BRX     *-2
01615  2 12 01775           MIW     DNT+3,2             OUTPUT DENSITY NO.
01616  0 12 01770           MIW     RSOM4
01617  0 12 01771           MIW     RSOM4+1
0162C  0 02 14000           TOPW
01621  0 43 00674           BRM     BRSUBR
01622  0 76 01602           LDA     OMAUN               IF ENTRANCE FROM OPERATOR REQUESTED
01623  0 02 02041           TYPW    1,1                 OUTPUT ROUTINE. ALWAYS TYPE.
01624  0 72 01747           SKA     C200
01625  0 23 00777           EXU     OUT1
01626  0 76 00337           LDA     UN
01627  0 66 00006           RSH     6
0163C  0 36 00012           STB     T1
01631  0 12 01331           MIW     SPCHAR              SPACE
01632  0 12 00012           MIW     T1
01633  0 12 00640           MIW     SCRC                CR
01634  0 51 01602           BRR     OMAUN
```

```
*
*       CONTROL TABLE FOR ALL MAGNETIC TAPE FUNCTIONS. Y BUFFER.
*
*
*                BINARY OR BCD SELECTABLE FUNCTIONS.
*
01635   0 02 03750    WT      WTBY    0.4                 WRITE TAPE                      YBUF
01636   0 02 03710    RT      RTBY    0.4                 READ TAPE                       YBUF
*
*                NON SELECTABLE FUNCTIONS
*
01637   0 02 02150    WEOF    WTDY    0.1                 WRITE END OF FILE               YBUF
01640   0 02 03773    ET      EOM     03773               ERASE TAPE                      YBUF
01641   0 02 07770    ETR     EOM     07770               ERASE TAPE REVERSE              YBUF
01642   0 02 03730    SF      EOM     03730               SCAN FORWARD                    YBUF
01643   0 02 07730    SR      EOM     07730               SCAN REVERSE                    YBUF
01644   0 02 14110    REW     REWY    0                   REWIND                          YBUF
01645   0 40 16310    D2T     SKS     16310               200 BPI TEST                    YBUF
01646   0 40 16710    DST     SKS     16710               556 BPI TEST                    YBUF
01647   0 40 17310    D8T     SKS     17310               800 BPI TEST                    YBUF
01650   0 40 10510    TRT     SKS     10510               TAPE READY TEST                 YBUF
01651   0 40 14110    FPT     SKS     14110               FILE PROTECT TEST               YBUF
01652   0 40 12110    BTT     SKS     12110               BEGINNING OF TAPE TEST          YBUF
01653   0 40 11110    ETT     SKS     11110               END OF TAPE TEST                YBUF
*
01654   0 00 77761    TCTE    PZE*    WT-*                -LENGTH OF CONTROL TABLE
*
                      REWY    OPD     214110              REWIND TAPE                     YBUF
                      RTSY    OPD     214100              READ TO SCAN                    YBUF
                      TGTY    OPD     4012710             TAPE GAP TEST                   YBUF
                      TFTY    OPD     4013710             TAPE END OF FILE TEST           YBUF
                      SRRY    OPD     213710              SKIP REMAINDER OF RECORD        YBUF
                      CILY    OPD     250100              CHCK INTERLACE                  YBUF
*
*
            00023     ZERO    BOOL    23                  00000000
            00024     ONE     BOOL    24                  00000001
            00025     SIGN    BOOL    25                  40000000
            00026     ONES    BOOL    26                  77777777
            00027     ADRMSK  BOOL    27                  00037777
```

```
*
*              FLAG AND SWITCH ASSIGNMENTS.
*
            00200   SBF     EQU     MC00        STARTING BLOCK FLAG
            00201   ETF     EQU     MC00+1      END OF TAPE FLAG
            00202   REF     EQU     MC00+2      READ ERROR FLAG
            00203   RPPF    EQU     MC00+3      READ PASS IN PROGRESS FLAG
            00204   SW1     EQU     MC00+4      SWITCH 1
            00205   SW2     EQU     MC00+5      SWITCH 2
            00206   SW3     EQU     MC00+6      SWITCH 3
            00207   SW4     EQU     MC00+7      SWITCH 4
            00210   BCDF    EQU     MC00+8      BCD FLAG
            00211   CPEF    EQU     MC00+9      CHARACTER PARITY ERROR FLAG
            00212   WEF     EQU     MC00+10     WRITE ERROR FLAG
            00213   SYNCF   EQU     MC00+11     SYNC. FLAG
*
*              RANDOM NUMBER STORAGE.
*
01655   0 00 00000  IRN     PZE                 INITIAL RANDOM NUMBER
01656   0 00 00000  IRN     PZE                 FIRST RANDOM NUMBER
01657   0 00 00000  RRNH    PZE                 RUNNING RANDOM NUMBER HOLD
01660   0 00 00000  RRN     PZE                 RUNNING RANDOM NUMBER
01661   23146555    KK      OCT     23146555    KLUGE CONSTANTS
*
*              RECORD COUNTERS.
*
01662   0 00 00000  MRC     PZE                 MAXIMUM RECORD COUNT
01663   0 00 00000  WRC     PZE                 WRITE RECORD COUNT
01664   0 00 00000  RRC     PZE                 READ RECORD COUNT
*
*              PASS COUNTERS
*
01665   0 00 00000  WPC     PZE                 WRITE PASS COUNT
01666   0 00 00000  RPC     PZE                 READ PASS COUNT
*
*              ERROR COUNTERS.
01667   0 00 00000  WEC     PZE                 WRITE ERROR COUNT
01670   0 00 00000  RWEC    PZE                 REWRITE ERROR COUNT
01671   0 00 00000  PREC    PZE                 PERMANENT READ ERROR COUNT
01672   0 00 00000  CPEC    PZE                 CHARACTER PARITY ERROR COUNT
01673   0 00 00000  LPEC    PZE                 LOGITUDINAL PARITY ERROR COUNT
01674   0 00 00000  WCEC    PZE                 WORD COUNT ERROR COUNT
01675   0 00 00000  CH1     PZE                 READ ERRORS IN CHANNEL 1
01676   0 00 00000  CH2     PZE                 READ ERRORS IN CHANNEL 2
01677   0 00 00000  CH3     PZE                 READ ERRORS IN CHANNEL 3
01700   0 00 00000  CH4     PZE                 READ ERRORS IN CHANNEL 4
01701   0 00 00000  CH5     PZE                 READ ERRORS IN CHANNEL 5
01702   0 00 00000  CH6     PZE                 READ ERRORS IN CHANNEL 6
01703   0 00 77762  ECTL    PZE*    WPC-*       END OF COUNTER TABLE AND LENGTH
```

```
*
*              C8UNTER L8CATI8NS.
*
01704  0 00 01662   LLL     PZE     MRC
01705  0 00 01663           PZE     WRC
01706  0 00 01664   RRCL    PZE     RRC
*
01707  0 00 01665   8PCL    PZE     WPC
0171C  0 00 01666   RPCL    PZE     RPC
01711  0 00 01667           PZE     WEC
01712  0 00 01670           PZE     RWEC
01713  0 00 01671           PZE     PREC
*
01714  0 00 01672   RECL    PZE     CPEC
01715  0 00 01673           PZE     LPEC
01716  0 00 01674           PZE     WCEC
01717  0 00 01675           PZE     CH1
0172C  0 00 01676           PZE     CH2
01721  0 00 01677           PZE     CH3
01722  0 00 01700           PZE     CH4
01723  0 00 01701           PZE     CH5
0172⁴  0 00 01702           PZE     CH6
```

```
*
*              GENERAL CONSTANTS.
*
01725  07700000      C1       OCT      07700000
01726  77777770      C3       DEC      -8
            01726    C4       EQU      C3                    OCT   77777770
01727  77777773      C5       DEC      -5
01730  77777775      C6       DEC      -3
01731  00000007      C7       OCT      7
01732  00001000      C8       OCT      1000
01733  00001777      C9       OCT      1777
01734  00000012      C10      OCT      12
01735  77777767      C11      DEC      -9
01736  00007777      C12      OCT      7777
01737  77777766      C13      DEC      -10
01740  77777774      C14      DEC      -4
01741  77777772      C15      DEC      -6
01742  77777757      C16      DEC      -17
01743  77777763      C17      DEC      -13
01744  77777761      C18      DEC      -15
01745  00000052      CS2      OCT      52
01746  00000077      C77      OCT      77
01747  37777600      C200     OCT      37777600
*
01750  2 17 01776    ERRN     ERR      IMAG.2
*
01751  00000002      TWO      DEC      2
01752  00000003      THREE    DEC      3
01753  00000004      FOUR     DEC      4
01754  00000010      EIGHT    DEC      8
01755  00000020      ZA       OCT      20
01756  00000040      ZB       OCT      40
*
            00012    T1       BOOL     12
            00013    T2       BOOL     13
            00014    T3       BOOL     14
            00015    T4       BOOL     15
*
            01753    KEY      EQU      FOUR
            00024    KEY1     EQU      ONE
*
01757  52512521      RSOM1    BCI      6. READ PASS   RECORD NO.
01765  12222324      RSOM2    BCI      1. BCD
01766  12223145      RSOM3    BCI      2. BINARY
01770  12644531      RSOM4    BCI      2. UNIT NO
01772  12020000      DNT      BCI      4. 200 556 800 ***
```

```
*
*              CONTROL CHARACTER DEFINITIONS.
*
                    B       OPD     2200000
                    C       OPD     2300000
                    D       OPD     2400000
                    M       OPD     4400000
                    N       OPD     4500000
                    O       OPD     4600000
                    P       OPD     4700000
                    R       OPD     5100000
                    S       OPD     6200000
                    T       OPD     6300000
                    U       OPD     6400000
                    CR      OPD     5200000
                    SP      OPD     1200000
*
*
01776       07777   IMAG    BSS     4095
```

```
*
*              OCTAL WORD OUTPUT SUBROUTINE.
*
                00040          ORG     32
00040  0 00 00000   WOS        PZE
00041  0 35 00015               STA     T4
00042  0 46 00014               XAB
00043  0 54 00024               SUB     ONE
00044  0 72 00025               SKA     SIGN
00045  0 01 00050               ORU     *+3
00046  0 12 01331               MIW     SPCHAR
00047  0 01 00043               ORU     *-4
0005C  0 76 40015               LDA*    T4
00051  0 75 01726               LDB     C4                    77777770
00052  0 66 20003               RCY     3
00053  0 35 00015               STA     T4
00054  0 12 00015               MIW     T4
00055  0 67 00006               LSH     6
00056  0 72 00024               SKA     ONE
00057  0 01 00052               ORU     *-5
0006C  0 51 00040               ORR     WOS
```

```
*
*              OPERATOR REQUESTED OUTPUT ROUTINE.
*
00061  0 02 02641   800     TYPW    1,4
00062  0 12 00640           MIW     SCRC
00063  0 53 00203           SKN     RPPF                    PASS
00064  0 01 00067           BRU     *+3                     WRITE
00065  0 12 00752           MIW     PDM+6                   READ
00066  0 01 00071           BRU     *+3
00067  0 12 00747           MIW     PDM+3
0007C  0 12 00750           MIW     PDM+4
00071  0 43 01602           BRM     OMAUN
00072  0 71 01742           LDX     C16                     -17
00073  0 12 00640   801     MIW     SCRC
00074  0 02 14000           TOPW
00075  0 43 00674           BRM     BRSUBR
00076  0 02 02641           TYPW    1,4
00077  2 12 00133           MIW     OT+17,2
C010C  0 02 14000           TOPW
00101  0 43 00674           BRM     BRSUBR
00102  2 76 01725           LDA     CLL+17,2
00103  0 75 01751           LDB     TWO
00104  0 02 02041           TYPW    1,1
00105  0 43 00040           BRM     WOS
00106  0 41 00073           BRX     801
00107  0 02 14000           TOPW
0011C  0 43 00674           BRM     BRSUBR
00111  0 01 00204           BRU     MC01
```

```
*
*              OUTPUT TABLE. IDENTIFIERS.
*
00112  44512312      OT      BCI      1.MRC
00113  66512312              BCI      1.WRC
00114  51512312              BCI      1.RRC
00115  66472312              BCI      1.WPC
00116  51472312              BCI      1.RPC
00117  66252312              BCI      1.WEC
0012C  51662523              BCI      1.RWEC
00121  47512523              BCI      1.PREC
00122  23472523              BCI      1.CPEC
00123  43472523              BCI      1.LPEC
00124  66232523              BCI      1.WCEC
00125  23300112              BCI      1.CH1
00126  23300212              BCI      1.CH2
00127  23300312              BCI      1.CH3
00130  23300412              BCI      1.CH4
00131  23300512              BCI      1.CH5
00132  23300612              BCI      1.CH6
```

```
*
*              PR8GRAMMED 8PERAT8RS.
*
                         SPF     P8PD    17700000          SET PR8GRAM FLAG
00133   0 35 00147               STA     FT1
00134   0 76 40000               LDA*    0
00135   0 16 00025               MRG     SIGN
00136   0 35 40000               STA*    0
00137   0 76 00147               LDA     FT1
00140   0 51 00000               BRR     0
*
*
                         RPF     P8PD    17600000          RESET PR8GRAM FLAG
00141   0 35 00147               STA     FT1
00142   0 76 40000               LDA*    0
00143   0 14 00150               ETR     FC1
00144   0 35 40000               STA*    0
00145   0 76 00147               LDA     FT1
00146   0 51 00000               BRR     0
*
00147   0 00 00000   FT1         PZE
00150   37777777     FC1         8CT     37777777
*
*
             00200               END     MC00
```

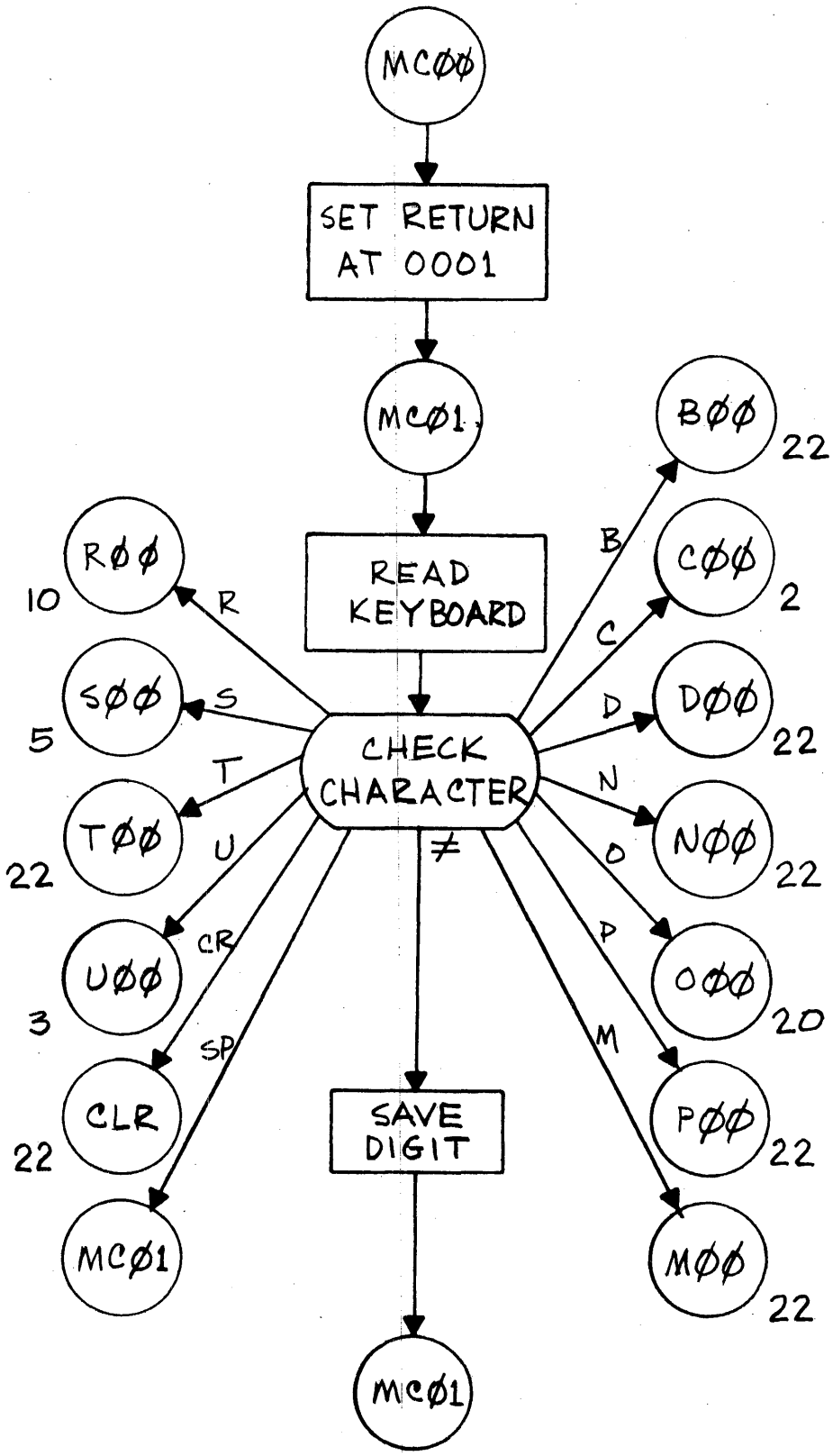
MCØØ
SET RETURN AT 0001
MCØ1
READ KEYBOARD
CHECK CHARACTER
SAVE DIGIT
MCØ1
RØØ
10
R
SØØ
5
S
TØØ
22
T
UØØ
3
U
CLR
22
CR
MCØ1
SP
BØØ
22
B
CØØ
2
C
DØØ
22
D
NØØ
22
N
OØØ
20
O
PØØ
22
P
MØØ
22
M
≠

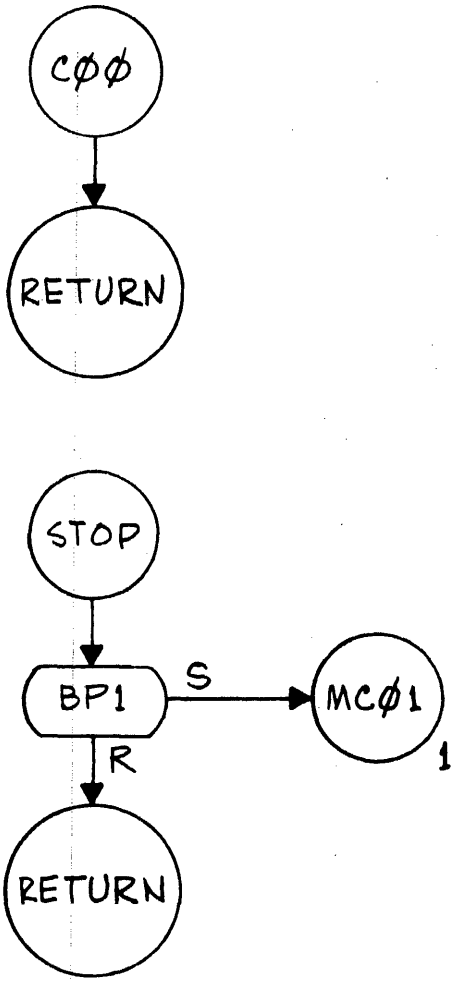
CØØ
RETURN
STOP
BP1
S
MCØ1
1
R
RETURN

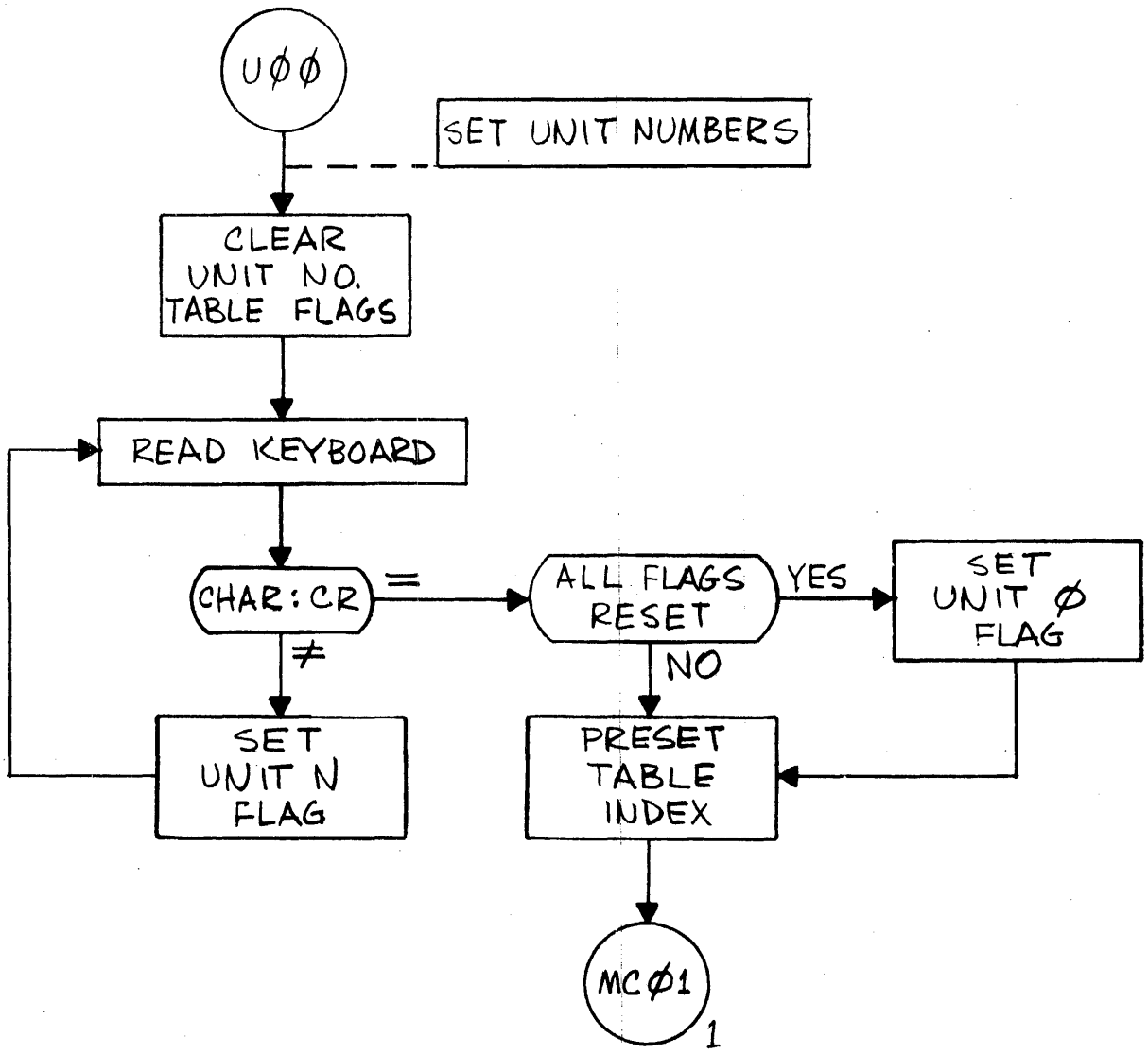
UØØ
SET UNIT NUMBERS
CLEAR UNIT NO. TABLE FLAGS
READ KEYBOARD
CHAR:CR
=
ALL FLAGS RESET
YES
SET UNIT Ø FLAG
NO
≠
SET UNIT N FLAG
PRESET TABLE INDEX
MCØ1
1

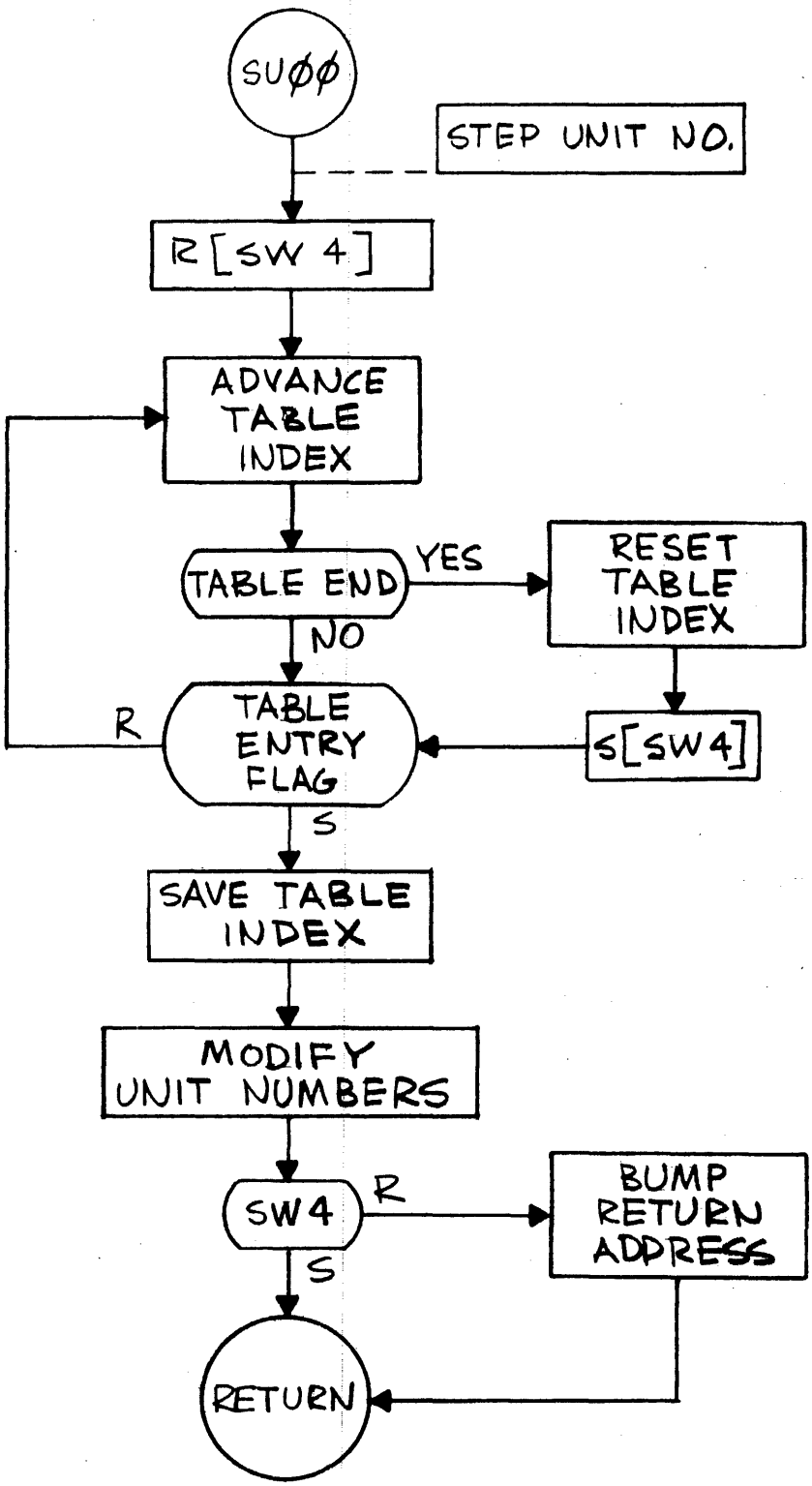
SUØØ
STEP UNIT NO.
R[SW 4]
ADVANCE TABLE INDEX
TABLE END
YES
RESET TABLE INDEX
NO
R
TABLE ENTRY FLAG
S[SW4]
S
SAVE TABLE INDEX
MODIFY UNIT NUMBERS
SW4
R
BUMP RETURN ADDRESS
S
RETURN

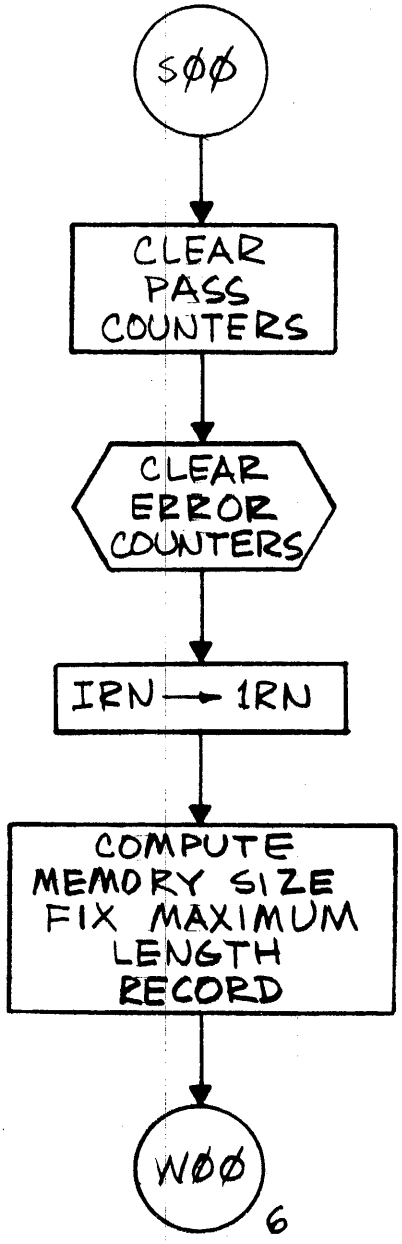
SØØ
CLEAR PASS COUNTERS
CLEAR ERROR COUNTERS
IRN → 1RN
COMPUTE MEMORY SIZE FIX MAXIMUM LENGTH RECORD
WØØ
6

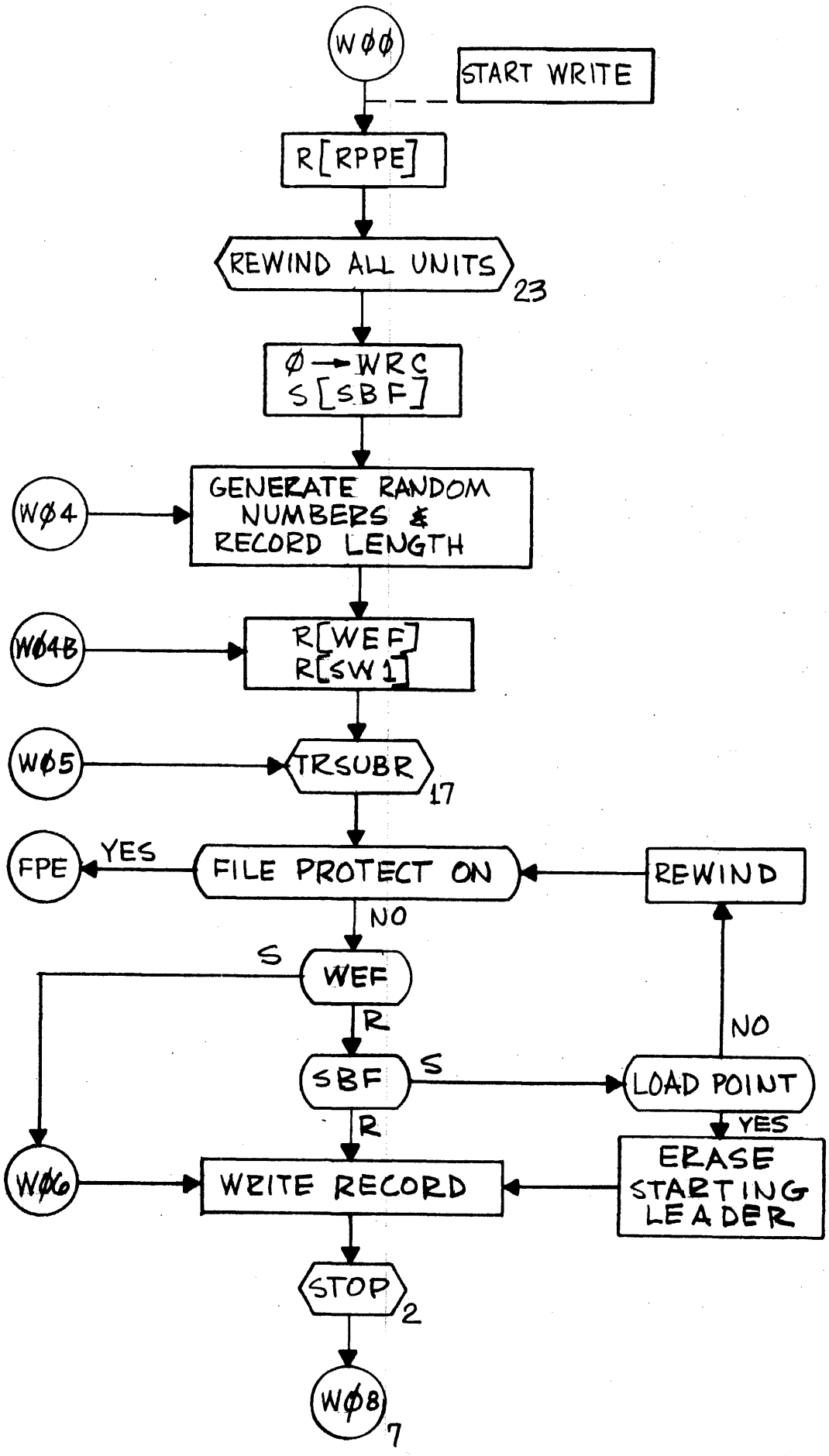
WØØ
START WRITE
R[RPPE]
REWIND ALL UNITS
23
Ø → WRC
S[SBF]
WØ4
GENERATE RANDOM NUMBERS & RECORD LENGTH
WØ4B
R[WEF]
R[SW1]
WØ5
TRSUBR
17
FPE
YES
FILE PROTECT ON
REWIND
NO
S
WEF
R
NO
SBF
S
LOAD POINT
YES
R
WØ6
WRITE RECORD
ERASE STARTING LEADER
STOP
2
WØ8
7

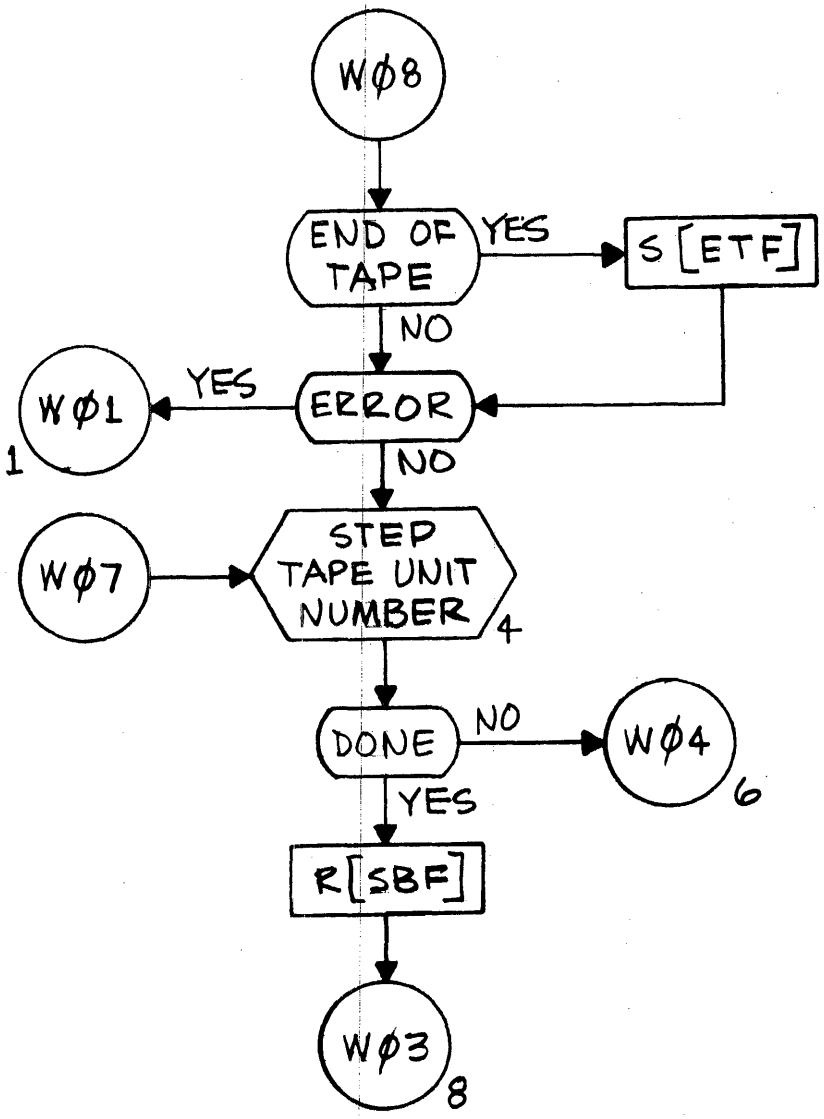
WØ8
END OF TAPE
YES
S [ETF]
NO
WØ1
YES
ERROR
1
NO
WØ7
STEP TAPE UNIT NUMBER
4
DONE
NO
WØ4
6
YES
R [SBF]
WØ3
8

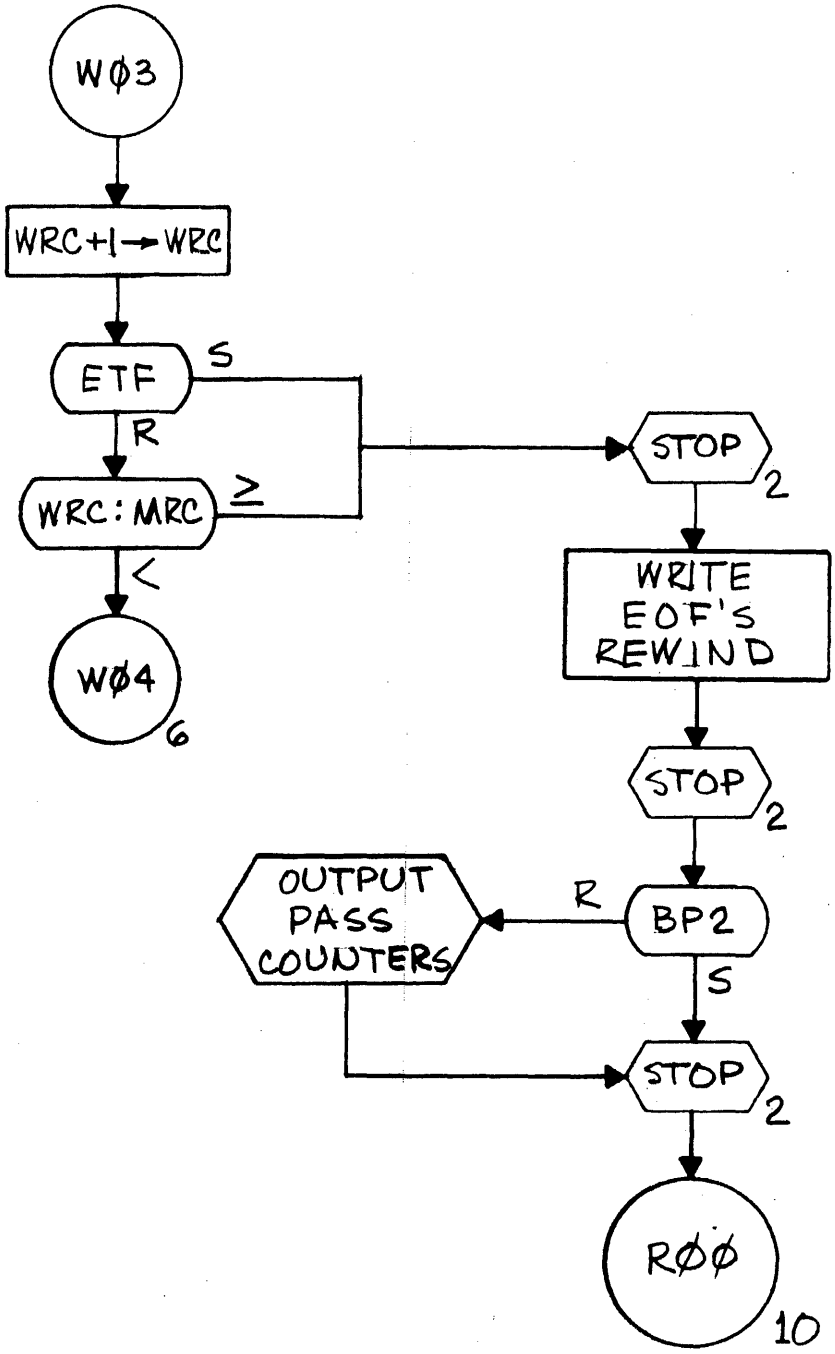
WØ3
WRC+1→WRC
ETF
S
R
WRC:MRC
≥
<
WØ4
6
STOP
2
WRITE
EOF'S
REWIND
STOP
2
OUTPUT
PASS
COUNTERS
R
BP2
S
STOP
2
RØØ
10

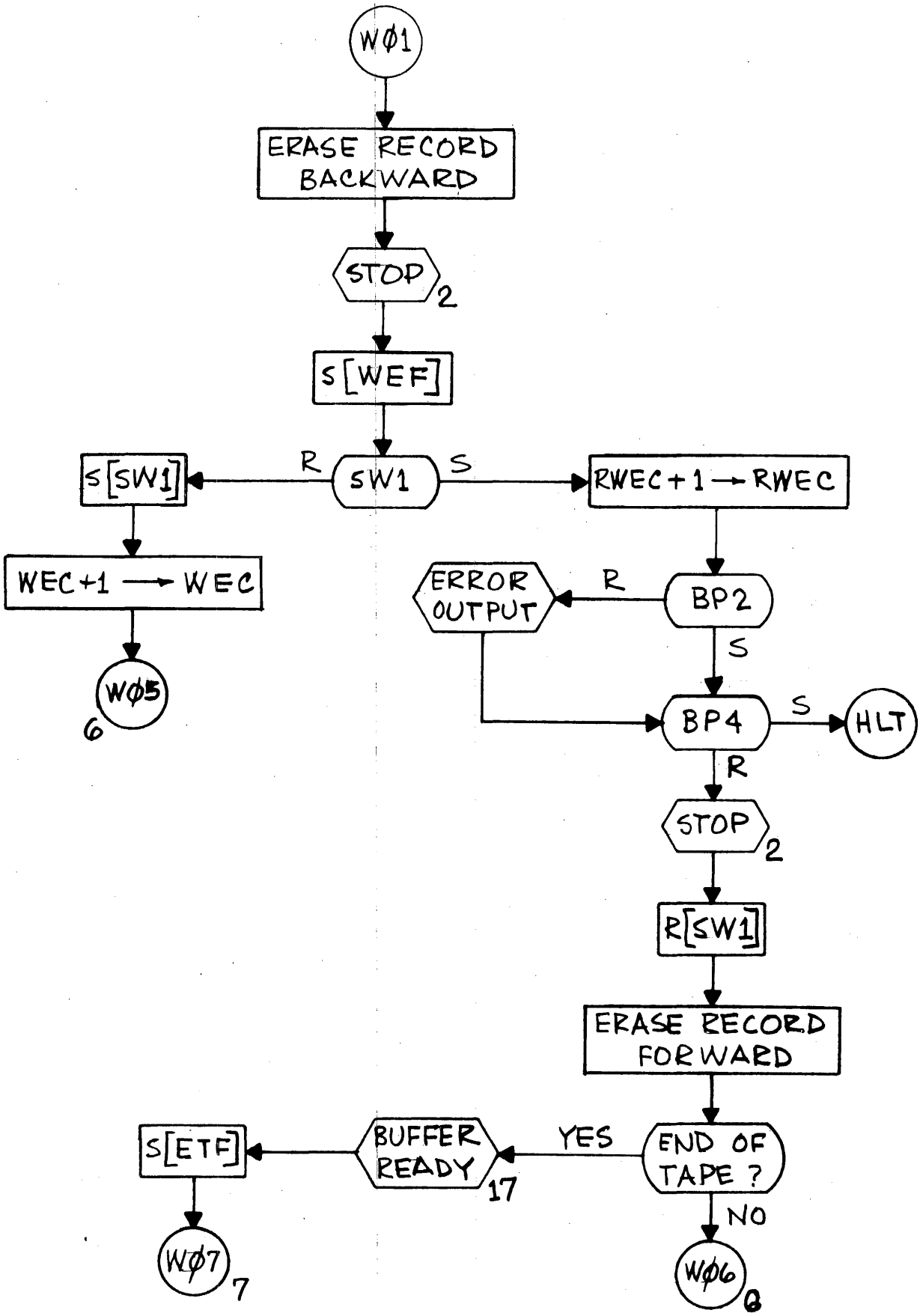
WØ1
ERASE RECORD BACKWARD
STOP 2
S[WEF]
R
SW1
S
S[SW1]
WEC+1 → WEC
WØ5 6
RWEC+1 → RWEC
ERROR OUTPUT
R
BP2
S
BP4
S
HLT
R
STOP 2
R[SW1]
ERASE RECORD FORWARD
END OF TAPE ?
YES
BUFFER READY 17
S[ETF]
WØ7 7
NO
WØ6 8

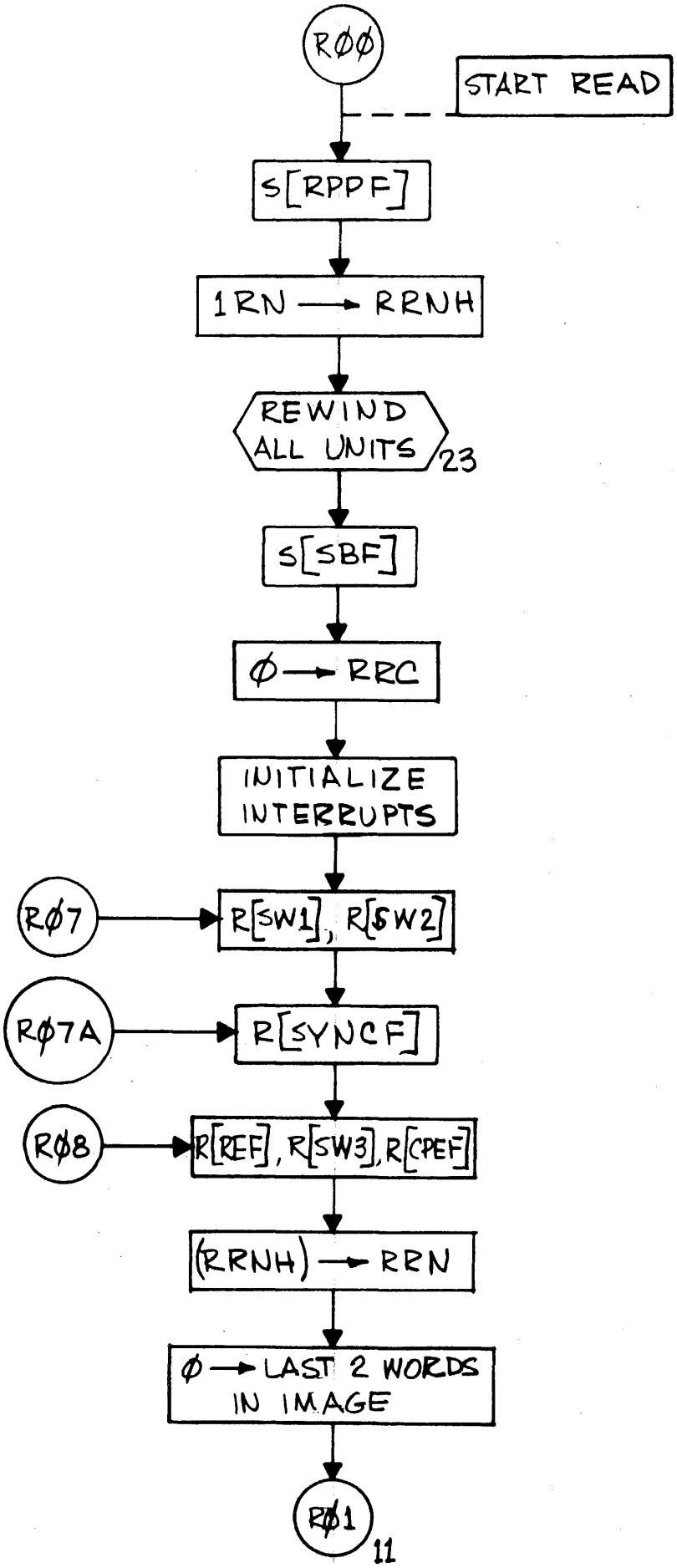
RØØ
START READ
S[RPPF]
1RN → RRNH
REWIND ALL UNITS
23
S[SBF]
Ø → RRC
INITIALIZE INTERRUPTS
RØ7
R[SW1], R[SW2]
RØ7A
R[SYNCF]
RØ8
R[REF], R[SW3], R[CPEF]
(RRNH) → RRN
Ø → LAST 2 WORDS IN IMAGE
RØ1
11

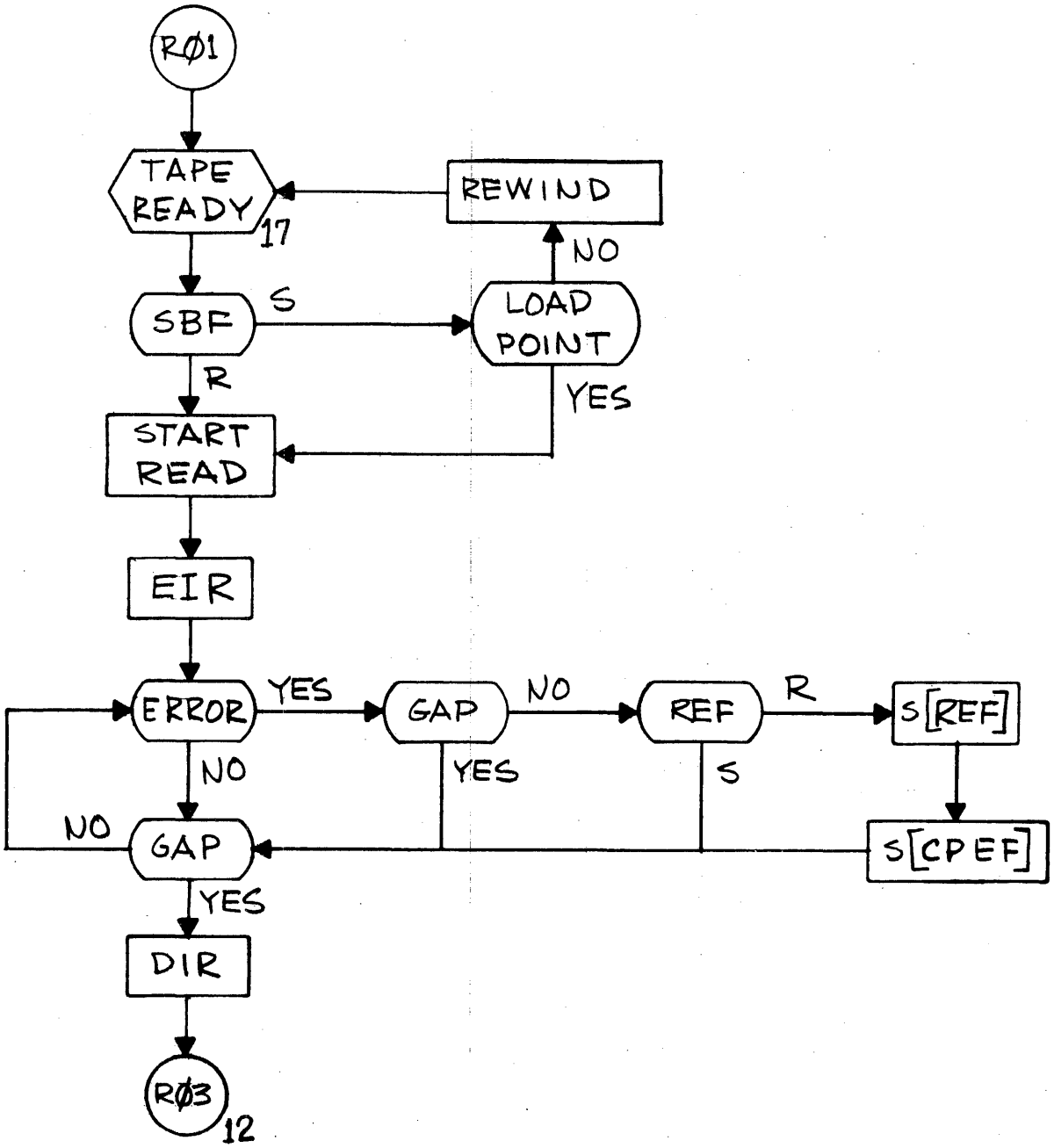
RØ1
TAPE READY
17
REWIND
NO
SBF
S
LOAD POINT
R
YES
START READ
EIR
ERROR
YES
GAP
NO
REF
R
S[REF]
NO
YES
S
NO
GAP
S[CPEF]
YES
DIR
RØ3
12

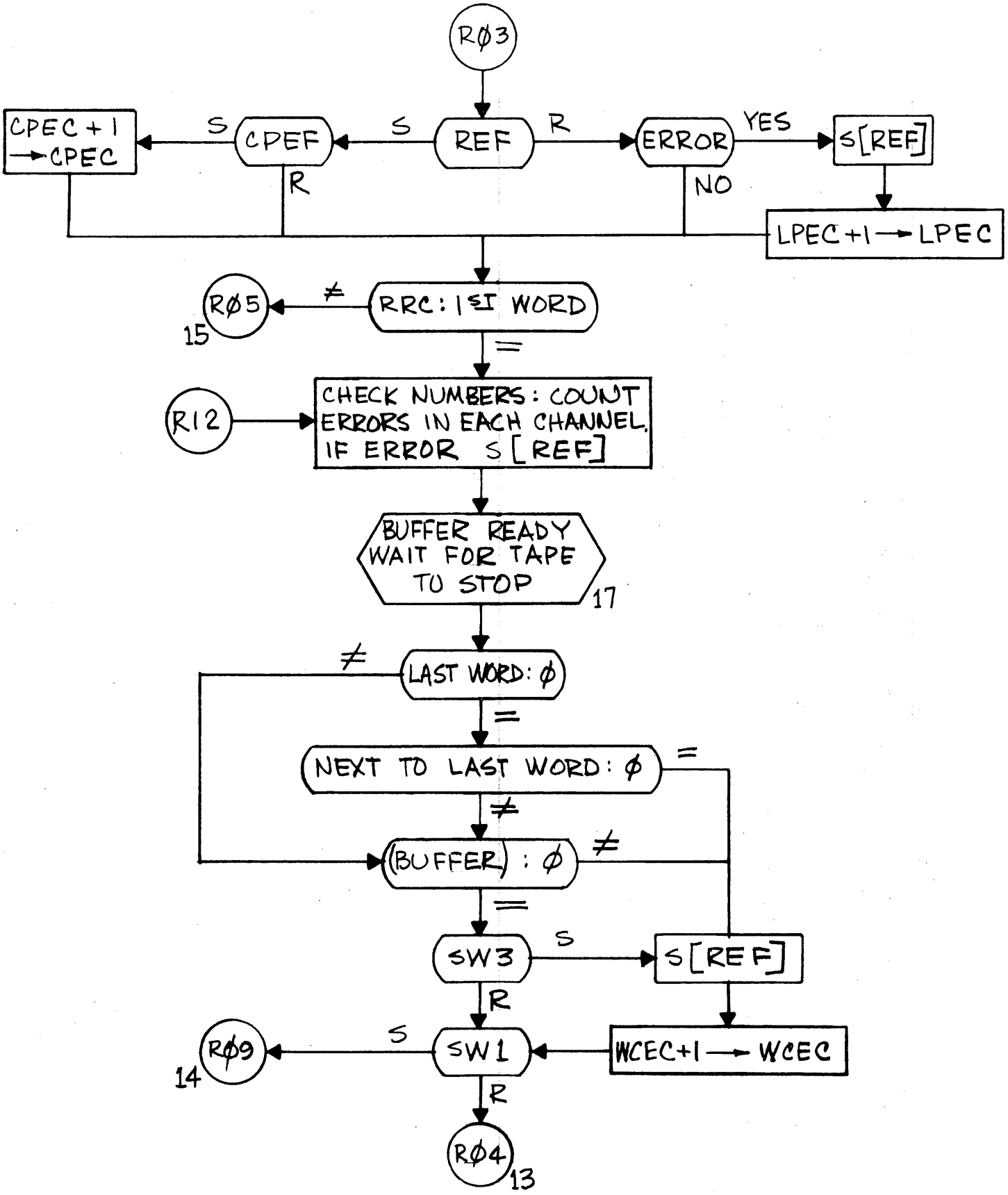
RØ3
REF
R
ERROR
YES
S[REF]
NO
S
CPEF
R
CPEC+1 → CPEC
LPEC+1 → LPEC
RRC: 1ST WORD
≠
RØ5
15
=
R12
CHECK NUMBERS: COUNT ERRORS IN EACH CHANNEL. IF ERROR S[REF]
BUFFER READY WAIT FOR TAPE TO STOP
17
LAST WORD: Ø
NEXT TO LAST WORD: Ø
(BUFFER) : Ø
SW3
S[REF]
SW1
WCEC+1 → WCEC
RØ9
14
RØ4
13

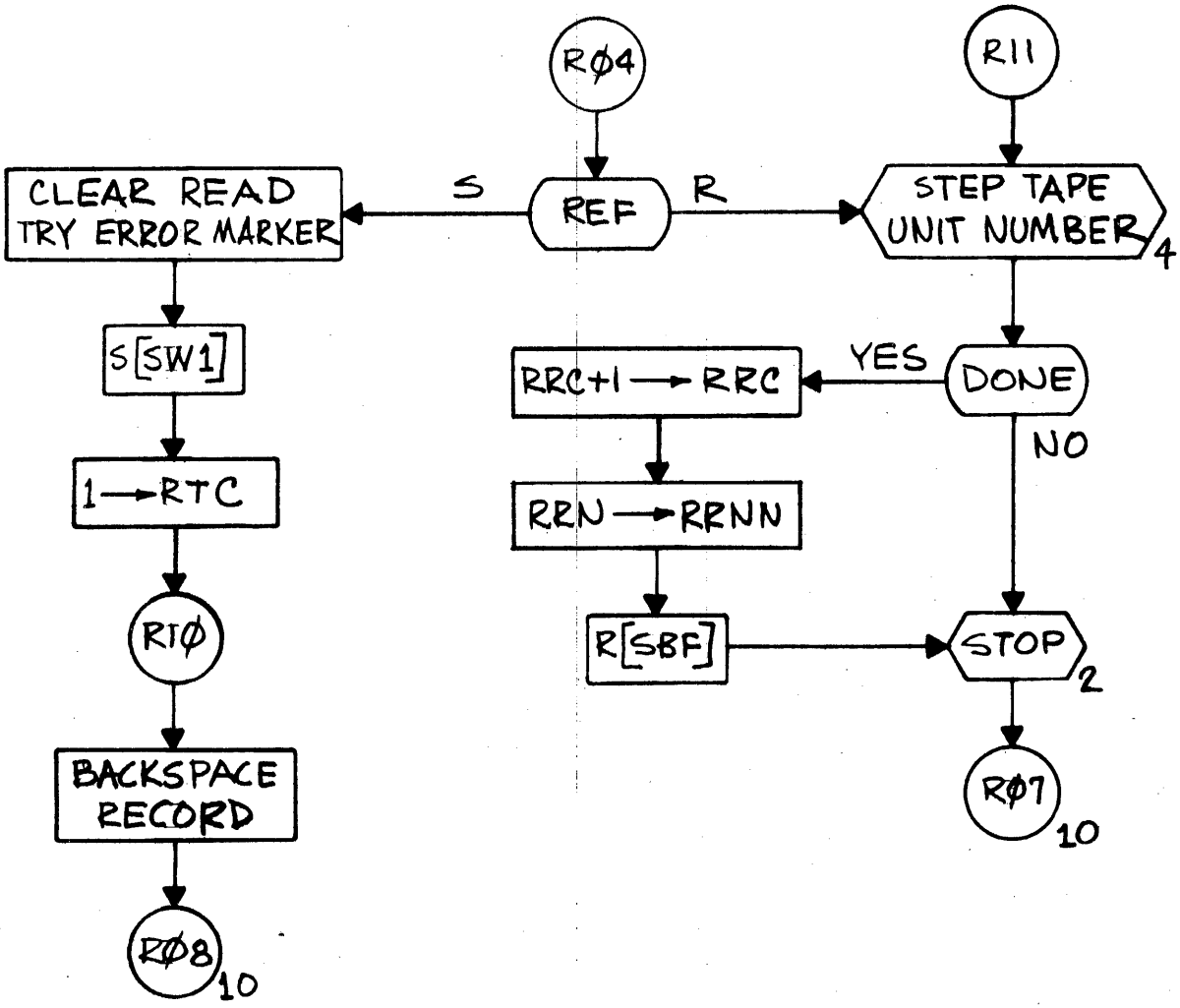
RØ4
R11
CLEAR READ
TRY ERROR MARKER
S
REF
R
STEP TAPE
UNIT NUMBER
4
S[SW1]
RRC+1 → RRC
YES
DONE
NO
1 → RTC
RRN → RRNN
RIØ
R[SBF]
STOP
2
BACKSPACE
RECORD
RØ7
10
RØ8
10

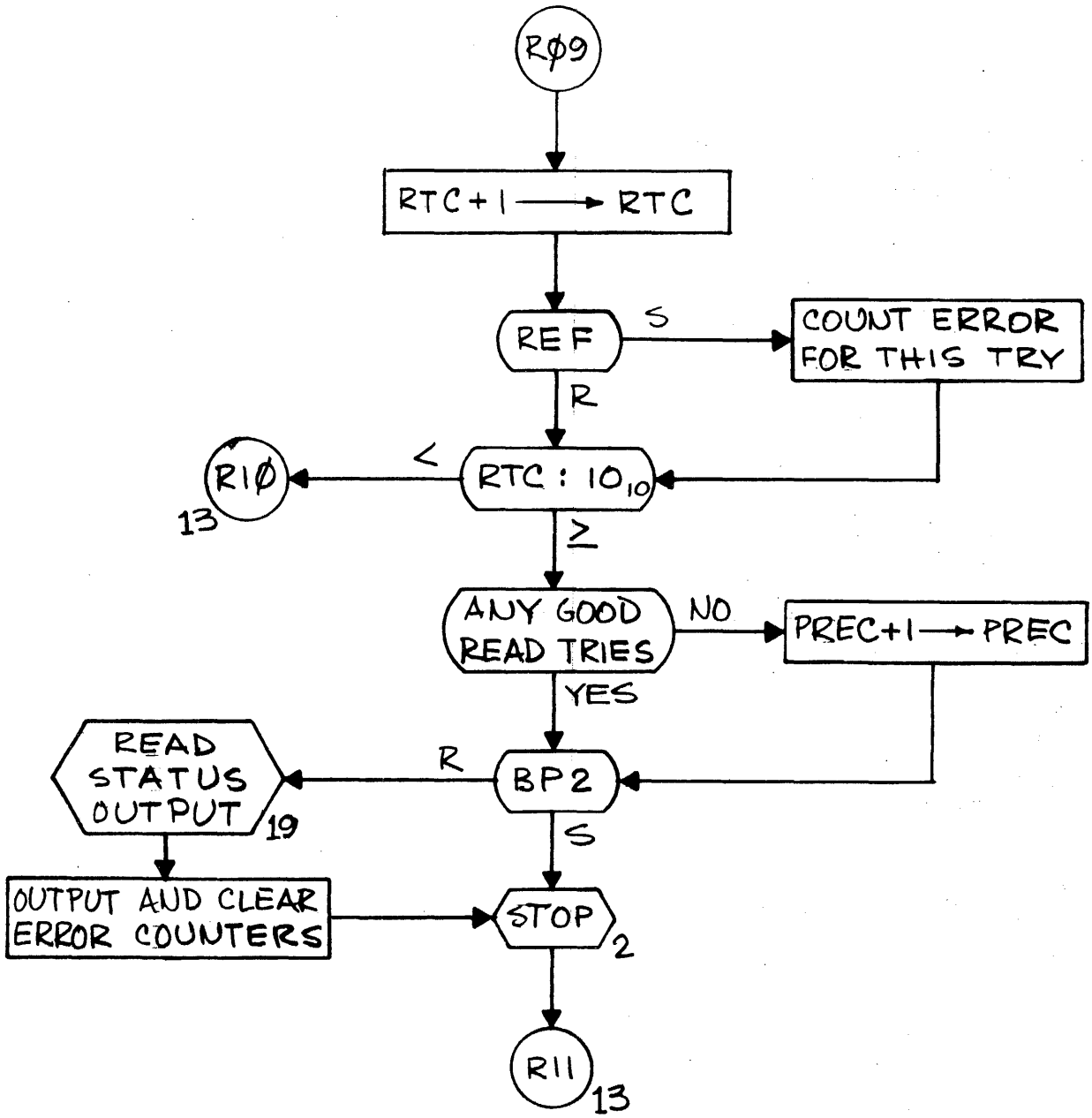
RØ9
RTC+1 → RTC
REF
S
COUNT ERROR FOR THIS TRY
R
R1Ø
13
<
RTC : 10₁₀
≥
ANY GOOD READ TRIES
NO
PREC+1 → PREC
YES
READ STATUS OUTPUT
19
R
BP2
S
OUTPUT AND CLEAR ERROR COUNTERS
STOP
2
R11
13

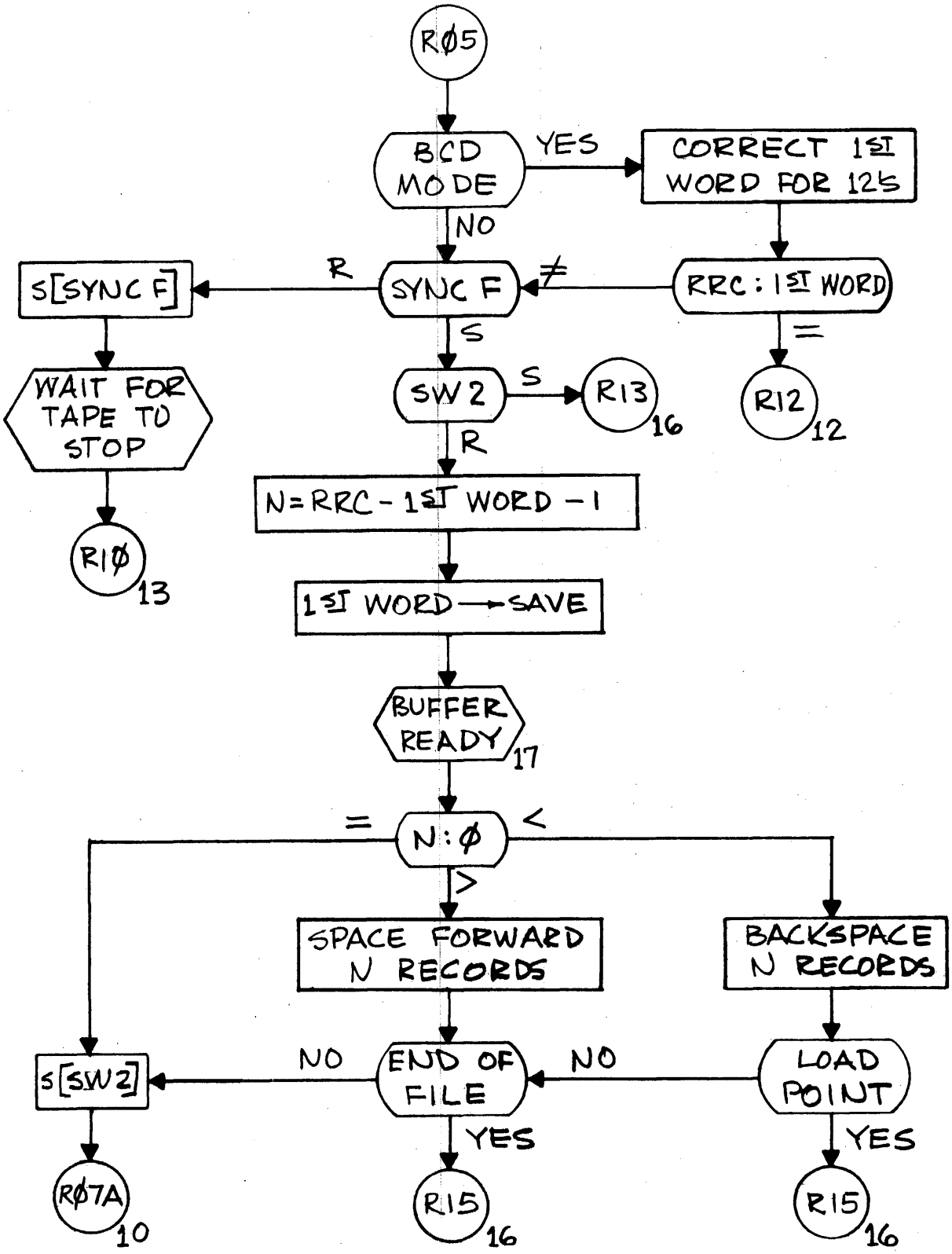
RØ5
BCD MODE
YES
CORRECT 1ST WORD FOR 125
NO
S[SYNC F]
R
SYNC F
≠
RRC : 1ST WORD
S
=
WAIT FOR TAPE TO STOP
SW 2
S
R13
16
R12
12
R
N = RRC - 1ST WORD - 1
RIØ
13
1ST WORD → SAVE
BUFFER READY
17
=
N : Ø
<
>
SPACE FORWARD N RECORDS
BACKSPACE N RECORDS
S[SW2]
NO
END OF FILE
NO
LOAD POINT
YES
YES
RØ7A
10
R15
16
R15
16

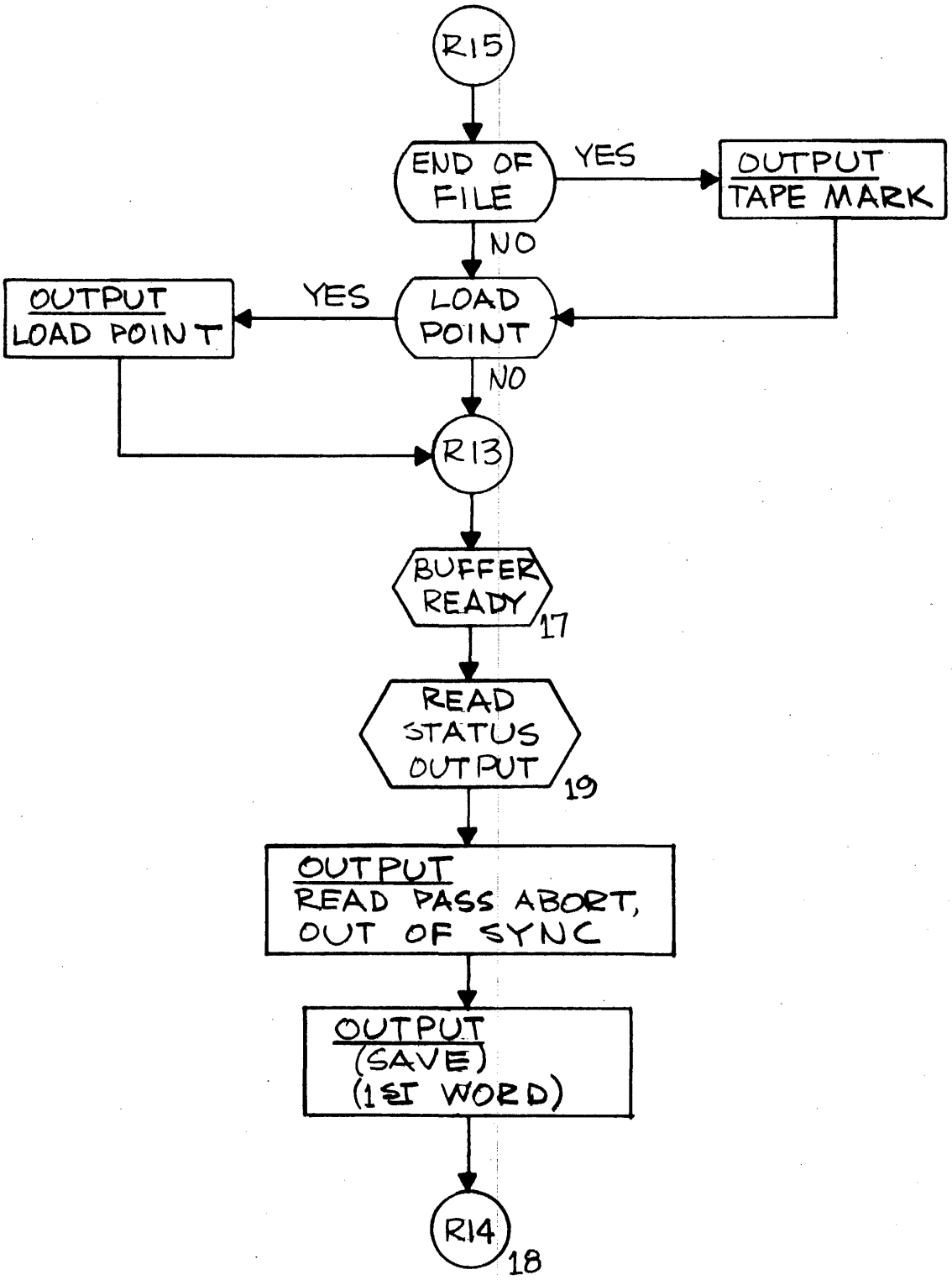
R15
END OF FILE
YES
OUTPUT TAPE MARK
NO
OUTPUT LOAD POINT
YES
LOAD POINT
NO
R13
BUFFER READY
17
READ STATUS OUTPUT
19
OUTPUT READ PASS ABORT, OUT OF SYNC
OUTPUT (SAVE) (1ST WORD)
R14
18

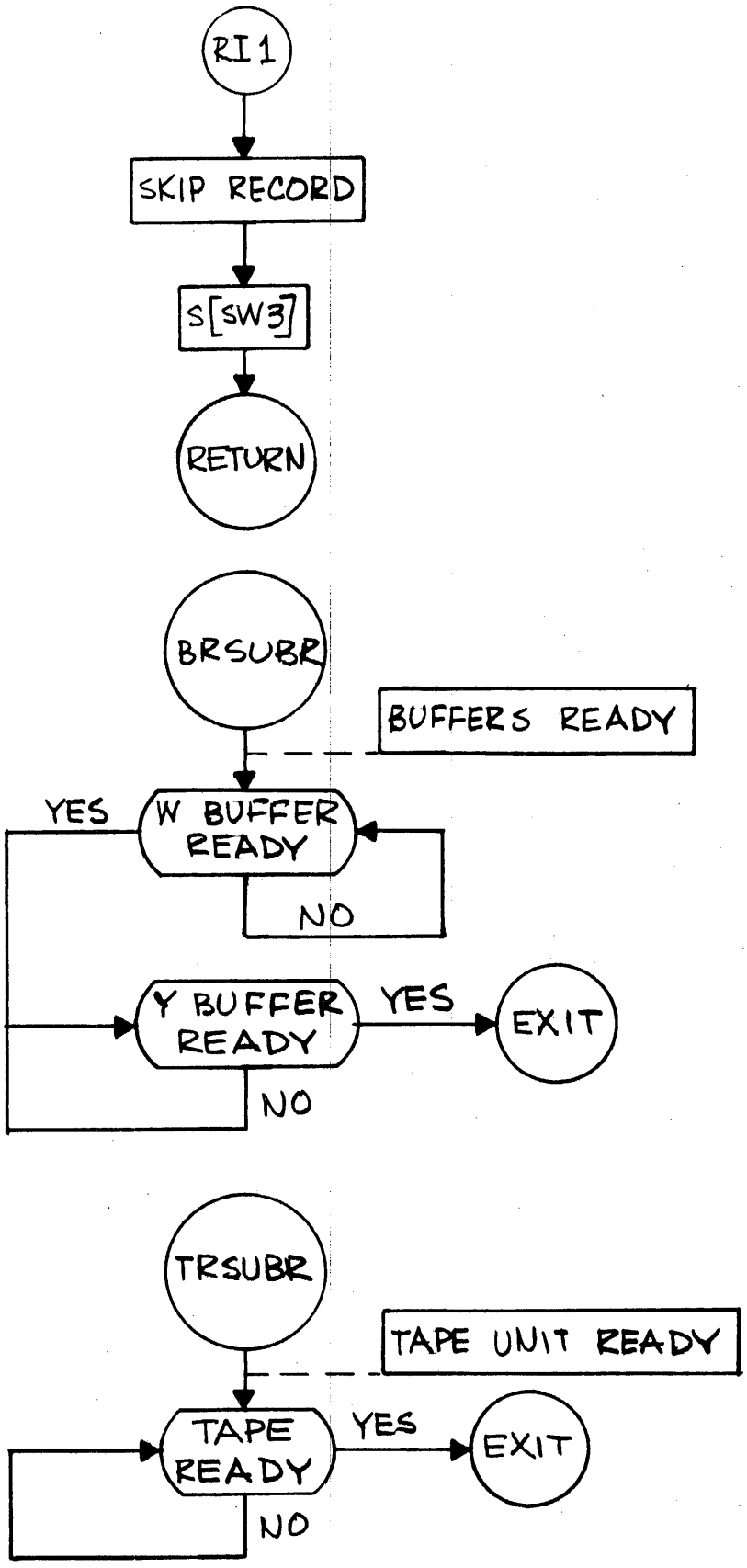
RI 1
SKIP RECORD
S[SW3]
RETURN
BRSUBR
BUFFERS READY
YES
W BUFFER READY
NO
Y BUFFER READY
YES
EXIT
NO
TRSUBR
TAPE UNIT READY
TAPE READY
YES
EXIT
NO

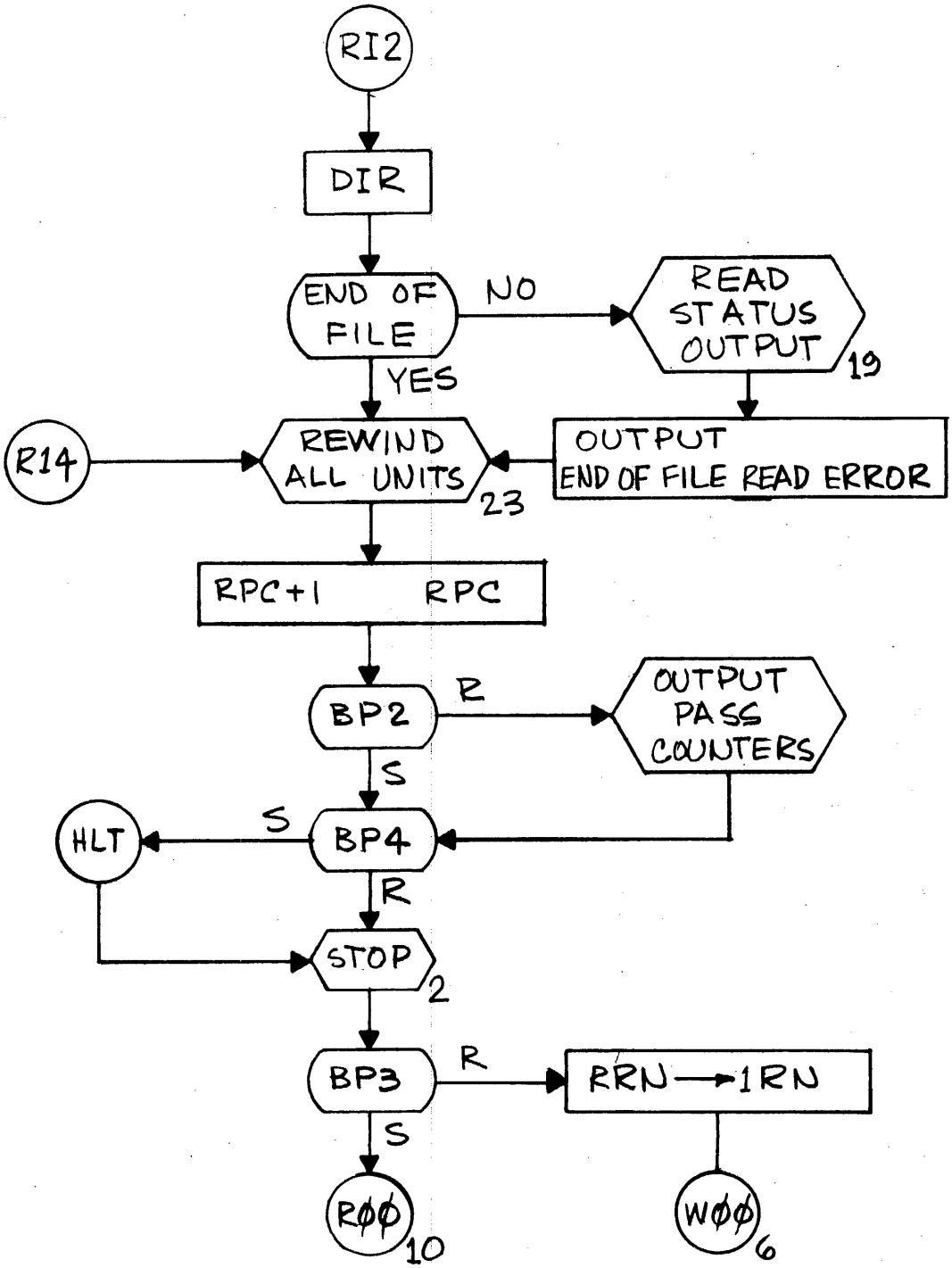
RI2
DIR
END OF FILE
NO
READ STATUS OUTPUT
19
YES
R14
REWIND ALL UNITS
23
OUTPUT END OF FILE READ ERROR
RPC+1 RPC
BP2
R
OUTPUT PASS COUNTERS
S
S
HLT
BP4
R
STOP
2
BP3
R
RRN → 1RN
S
RØØ
10
WØØ
6

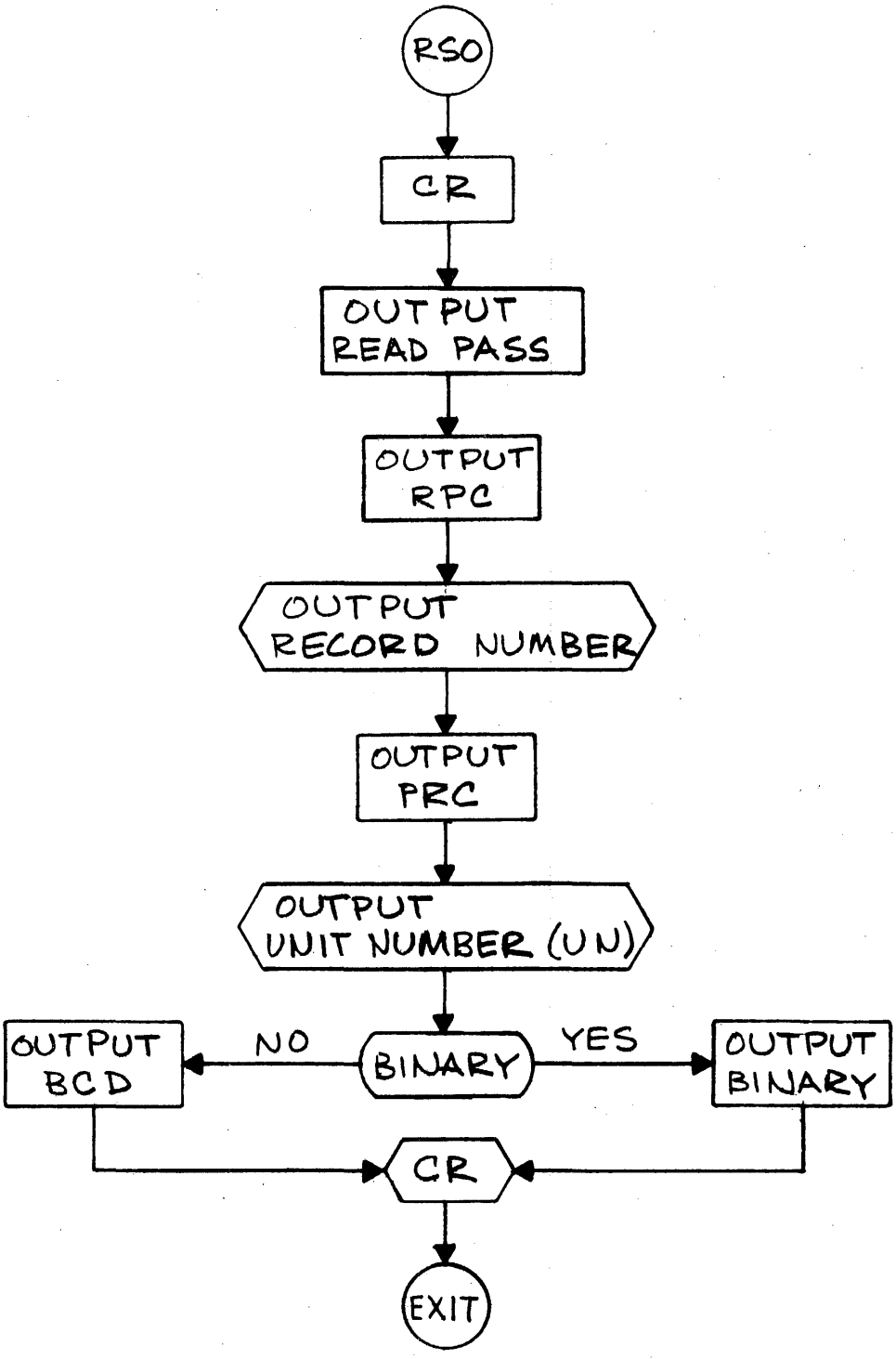
RSO
CR
OUTPUT READ PASS
OUTPUT RPC
OUTPUT RECORD NUMBER
OUTPUT PRC
OUTPUT UNIT NUMBER (UN)
OUTPUT BCD
NO
BINARY
YES
OUTPUT BINARY
CR
EXIT

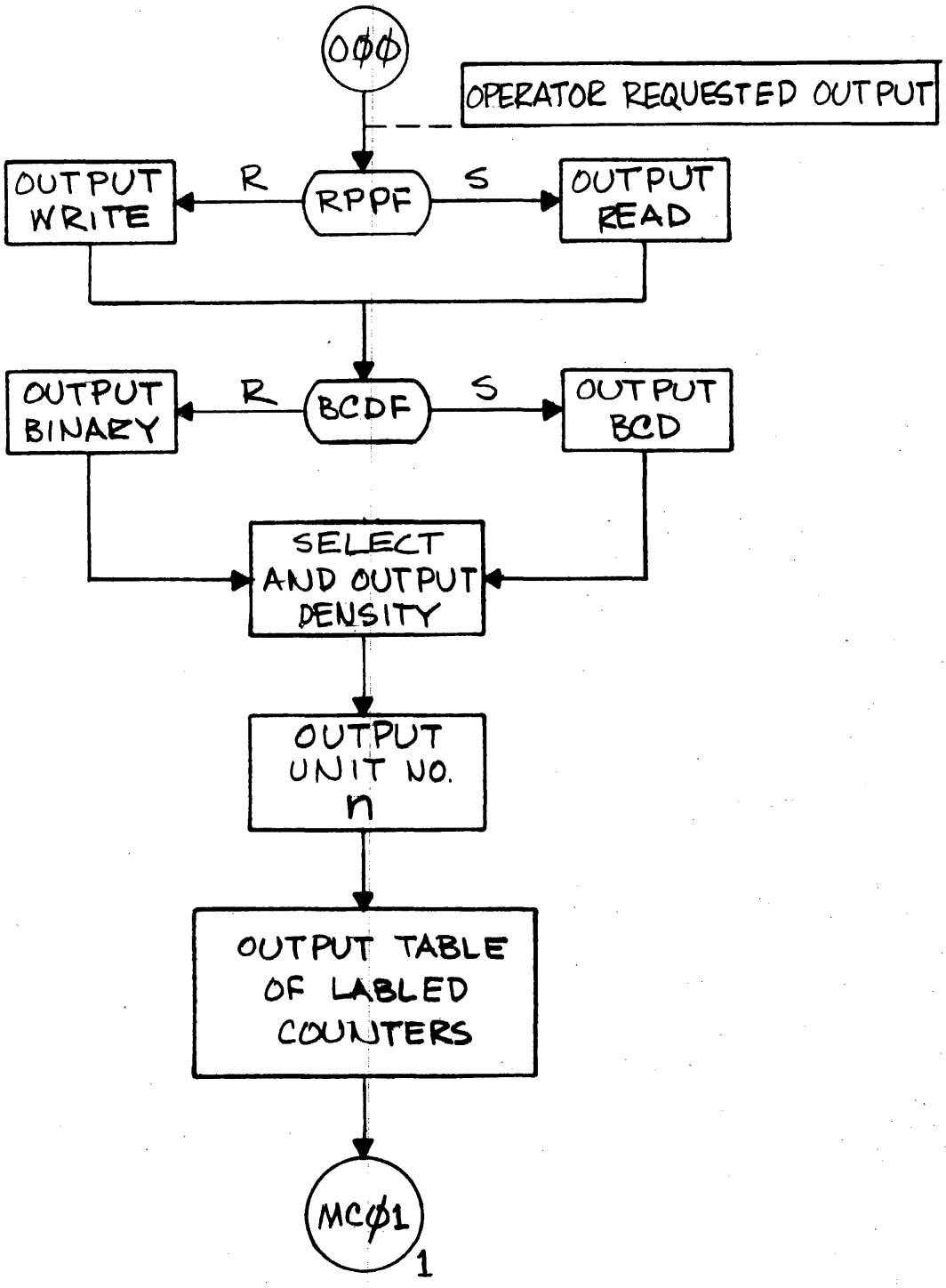
000
OPERATOR REQUESTED OUTPUT
OUTPUT WRITE
R
RPPF
S
OUTPUT READ
OUTPUT BINARY
R
BCDF
S
OUTPUT BCD
SELECT AND OUTPUT DENSITY
OUTPUT UNIT NO. n
OUTPUT TABLE OF LABLED COUNTERS
MC01
1

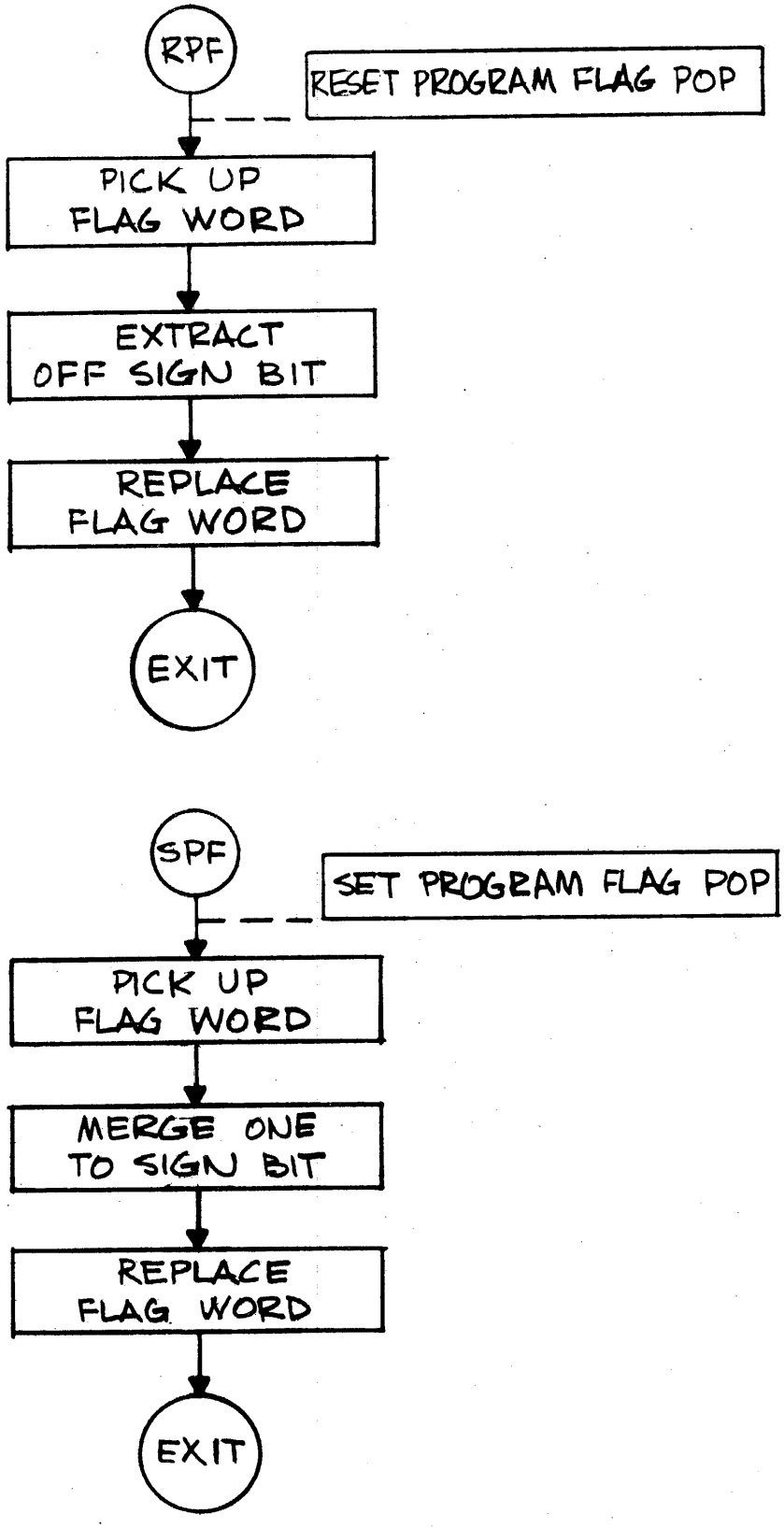
RPF
RESET PROGRAM FLAG POP
PICK UP FLAG WORD
EXTRACT OFF SIGN BIT
REPLACE FLAG WORD
EXIT
SPF
SET PROGRAM FLAG POP
PICK UP FLAG WORD
MERGE ONE TO SIGN BIT
REPLACE FLAG WORD
EXIT

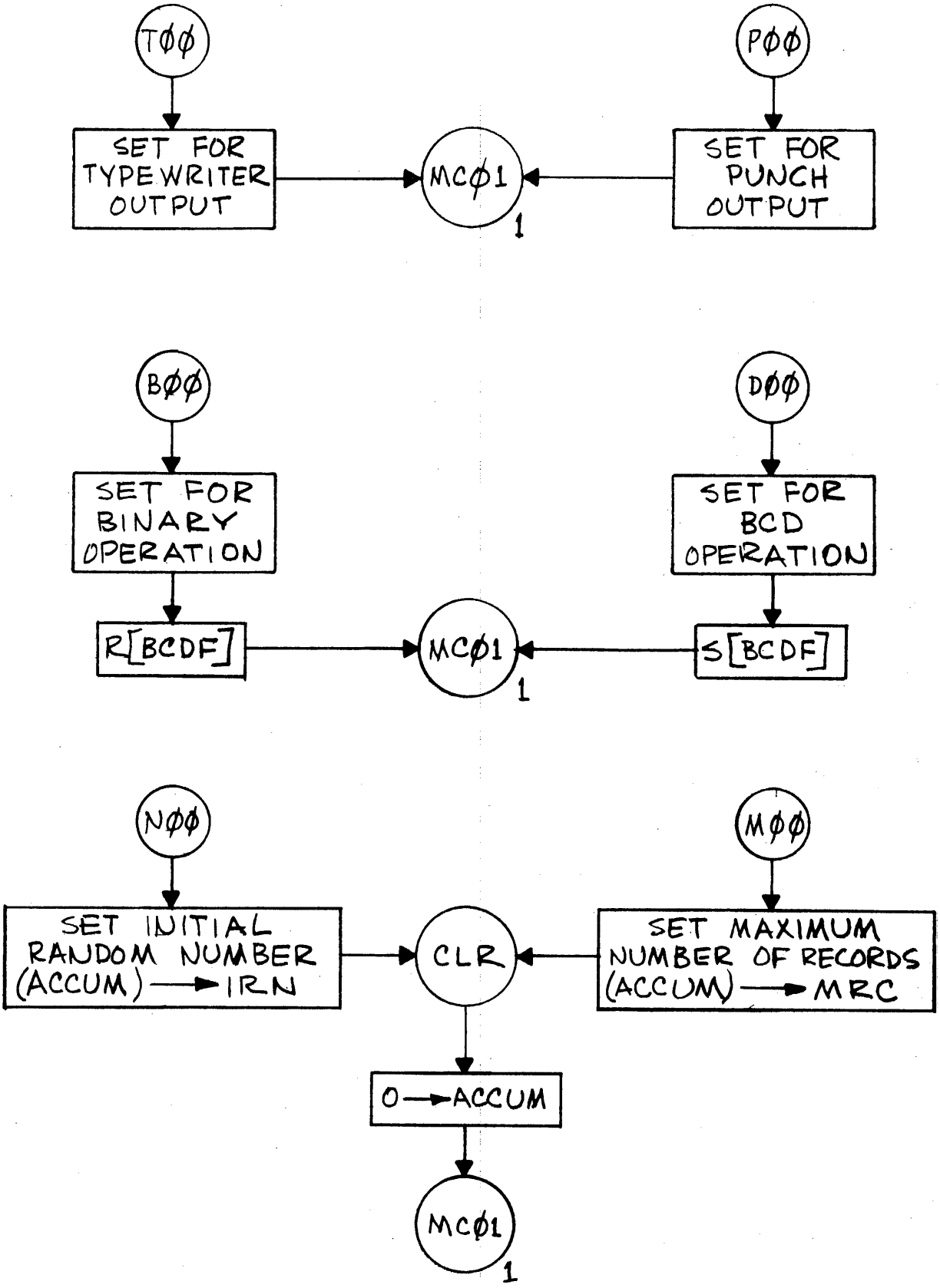
TØØ
SET FOR TYPEWRITER OUTPUT
MCØ1
1
PØØ
SET FOR PUNCH OUTPUT
BØØ
SET FOR BINARY OPERATION
R[BCDF]
MCØ1
1
DØØ
SET FOR BCD OPERATION
S[BCDF]
NØØ
SET INITIAL RANDOM NUMBER (ACCUM) → IRN
CLR
MØØ
SET MAXIMUM NUMBER OF RECORDS (ACCUM) → MRC
0 → ACCUM
MCØ1
1

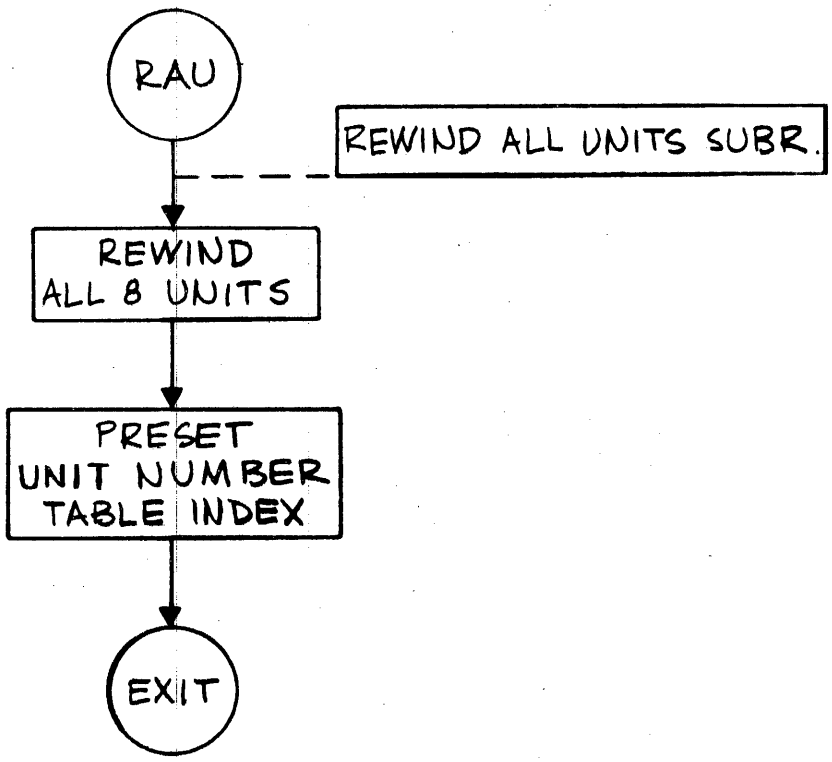
RAU
REWIND ALL UNITS SUBR.
REWIND
ALL 8 UNITS
PRESET
UNIT NUMBER
TABLE INDEX
EXIT

IDENTIFICATION: 920 Closed Loop Analog Statistical Test Program

AUTHOR: L. Bergquist, SDS

ACCEPTED: 11 May 1964

COMPUTER CONFIGURATION: Applicable to any SDS 920 computer system with EJ20 Standard Junction Box.

PURPOSE: To compute the mean and standard deviation from closed loop analog measurements for the purpose of determining system accuracy and stability.

PROGRAMMED OPERATORS: DPSS, BID, DSQ

STORAGE: Program allocation 001, 100_8 to 1756_8. Temporary storage 40_8 to 64_8. Data storage 30_8 locations per D/A channel.

TIMING: 1.3 ms/scan/channel.

USE:

1.0 LOADING

The program is in absolute format on a self-loading binary tape. All necessary Programmed Operators and their linkages are contained on the program tape. Use FILL procedure to load the program.

2.0 RESTART

If it is required at any time to restart the program, set the RUN-IDLE-STEP switch to IDLE, press START, and move the switch to STEP and then to RUN.

3.0 SYSTEM PARAMETERS

Following Loading or Restart the program will request the operator to define several system parameters. These include the number of D/A channels, the size of the ADC converter, and the starting multiplexer channel for the first D/A converter. All numerical inputs are in decimal.

USE: (Cont)

3.1 "D/A CHANNELS"

Input the number of D/A channels to be tested.

3.2 "ADC SIZE"

Input the size of the analog to digital converter including the sign.

3.3 "MX CHANNEL"

Input the multiplexer channel number associated with the first digital to analog converter. Each additional digital to analog converter will be input through succeeding multiplexer channels.

4.0 SCAN PARAMETERS

Included in the scan parameters that require operator input are the channel number, number of scans to be performed, and the output limits for the digital to analog converter.

4.1 "SCAN COUNT"

Input the number of scans to be performed for each channel.

4.2 "CHANNEL"

Input the D/A channel to be scanned (0 to N). If all D/A channels are to be scanned simultaneously, input the letter "A" instead of the decimal input.

4.3 "LIMITS"

Input the limits, as decimal fractions, indicating the low and high values to be output to the D/A converters as a step function. If a random function is desired, input the letter "R" instead of the first decimal input. The program will proceed to scan following these inputs.

5.0 SCAN

The scan consists of an accumulation of data obtained from system measurements. System measurements involve output to a D/A converter, selecting the return multiplexer channel, and input from the A/D converter. Each successive output for a particular D/A converter uses a different value computed from either a random number generator or a step generator.

USE: (Cont)

The accumulation of data consists of updating sums for mean and standard deviation computation and updating a distribution table. The distribution table represents a record of measurements deviating from their expected in converter counts. The table ranges up to plus or minus 8 converter counts. Those greater than 8 are listed as 8.

Scan will terminate when one of two conditions is attained. Either operator intervention by breakpoint control, or the Scan Count has been reached. Breakpoint control consists of depressing and raising a breakpoint switch.

5.1 Breakpoint #1

If Breakpoint #1 is depressed during Scan or listing, control is transferred to Scan Parameters (4.0).

5.2 Breakpoint #2

If Breakpoint #2 is depressed during Scan or listing, control is transferred to Output Parameters (6.0).

5.3 Scan Limit

When the number of scans have been performed, defined in Scan Parameters, Scan will terminate and control transfer will be to Output Parameters (6.0).

6.0 OUTPUT PARAMETERS

Following Scan, the program will request the operator to define two output parameters before listing the data. These are the format and the channel number to be output.

6.1 "CHANNEL"

Input the D/A channel to be output (0 to N). If there is no input, the last channel or channels previously scanned will be listed.

6.2 "FORMAT"

Input the character "M" or "D" specifying the type of listing desired (see Table II for examples). If no input is made, the previous format is assumed.

USE: (Cont)

6.2.1 General Format, Input "D"

The general format listing consists of the channel number, the number of scans performed, the maximum and minimum measurements made from the expected measurement, the mean bias (mean measurement from the expected), the standard deviation about the mean bias, and a distribution table representing deviation of measurements in ADC converter counts about the expected measurement (D/A output value).

6.2.2 Abbreviated Format, Input "M"

Only the channel number, mean bias, and standard deviation are listed.

METHOD: The mean bias and standard deviation are computed in the following manner.

For all X_i = (ADC value)$_i$ - (D/A value)$_i$

$$\text{Mean bias} = \frac{1}{n} \sum_{i=1}^{n} X_i = \delta$$

$$\text{Standard deviation} = \left[\frac{1}{n} \sum_{i=1}^{n} (X_i)^2 - (\delta)^2 \right]^{1/2}$$

TABLE I

CLOSED LOOP ANALOG STATISTICAL TEST PROGRAM

COMPUTER OUTPUT	INPUT RANGE	REMARKS
I.A. "D/A CHANNELS"	1. 1 to N	Follows Loading or Restart. Specify the total number of D/A converters under test.
I.B. "ADC SIZE"	1. 7 to 14	Specify the size of the Analog to Digital converter including the sign.
I.C. "MX CHANNEL"	1. 0 to N	Specify the multiplexer channel associated with the first D/A channel.
II.A. "SCAN COUNT"	1. 1 to N	Follows data listing or Breakpoint #1. Specify the number of scans to be performed for each channel.
	2. no entry	Assume last specified scan count.
II.B. "CHANNEL"	1. 0 to N	Perform test on specified D/A channel only.
	2. A	Perform test on all D/A channels (I.A.).
	3. no entry	Assume last specified channel or channels (II.A.).
II.C. "LIMITS"	1.a. -.99999 to .99999	Input lower limit of 'ramp' function.
	1.b. -.99999 to .99999	Input upper limit of 'ramp' function.
	2. R	Perform 'random' function over entire D/A range
	3. no entry	Assume last output function and limits.

TABLE I (Cont)

COMPUTER OUTPUT	INPUT RANGE	REMARKS
III.A. "CHANNEL"	1. 0 to N	Output the data for the specified D/A channel
	2. A	Output data for all D/A channels (I.A.)
	3. no entry	Output data for channel or channels specified under II.B.
III.B. "FORMAT"	1. M	Output the channel number, mean, and standard deviation (see Table II).
	2. D	Output the channel number, total number of scans, maximum and minimum measurements, mean measurement, standard deviation about the mean, and a distribution table (see Table III.)
	3. no entry	Assume previous specified format.

TABLE III

1. 'M' (Typical for simultaneous 3 channel scan.)

CHANNEL	MEAN	STD DEVIATION
0	1.56	.49
1	.64	1.02
2	.20	.15

2. 'D' (Typical for single channel scan)

CHANNEL	2
SCAN	25013
MAX	4.00
MIN	-3.00
MEAN BIAS	.64
STD DEV	1.02
-3	3
-2	71
-1	1405
0	11904
1	10010
2	1129
3	485
4	4

```
                                LOAD
                        *
                        *                SYSTEM PARAMETERS
                        *
00200  0 76 01251       ST1     LDA      RESTRT
00201  0 35 00001               STA      1
00202  1 00 01151       ST1A    TYPE     HDG1
00203  1 01 00000               DECI
00204  0 41 00202               BRX      ST1A
00205  0 73 00023               SKG      ZERO                X > 0
00206  0 01 00202               BRU      ST1A                NO
00207  0 35 01317               STA      DACHNS              SET D/A CHANNELS
                        *
00210  1 00 01156       ST2     TYPE     HDG2
00211  1 01 00000               DECI
00212  0 41 00210               BRX      ST2
00213  0 73 01302               SKG      P14
00214  0 73 01277               SKG      P6
00215  0 01 00210               BRU      ST2
00216  0 35 01314               STA      ADCSIZ
00217  0 76 01302               LDA      P14
00220  0 54 01314               SUB      ADCSIZ
00221  0 35 00040               STA      SIZE
00222  0 46 30003               CLR
00223  0 76 01343               LDA      O14
00224  0 67 40040               LSH*     SIZE
00225  0 35 01315               STA      INCNO
00226  0 46 30003               CLR
00227  0 54 01315               SUB      INCNO
00230  0 35 01316               STA      FIELD
                        *
00231  1 00 01162       ST3     TYPE     HDG3
00232  1 01 00000               DECI
00233  0 41 00231               BRX      ST3
00234  0 53 00041               SKN      DFLAG
00235  0 01 00231               BRU      ST3
00236  0 35 01320               STA      MXLOC
                        *                SCAN PARAMETERS
00237  1 00 01166       ST4     TYPE     HDG4
00240  1 01 00000               DECI
00241  0 41 00237               BRX      ST4
00242  0 53 00041               SKN      DFLAG
00243  0 76 01321               LDA      SCNO
00244  0 35 01321               STA      SCNO
00245  0 46 30003               CLR
00246  0 54 01321               SUB      SCNO
00247  0 35 01322               STA      SCNO1
                        *
00250  0 76 00026       ST5     LDA      NEGONE
00251  0 75 01325               LDB      POINT
00252  0 53 01341               SKN      FE
00253  0 46 30003               CLR
00254  0 36 01325               STB      POINT
00255  0 36 01326               STB      CHNO
```

```
00256  0 35 01341     55          STA     FE
00257  0 35 01342     56          STA     FA
00260  1 00 01175     57          TYPE    HDG7                CHANNEL
00261  1 01 00000     58          DECI
00262  0 53 00047     59          SKN     AFLAG
00263  0 01 00276     60          BRU     ST5A
00264  0 53 00041     61          SKN     DFLAG
00265  0 01 00311     62          BRU     ST6
00266  0 73 00026     63          SKG     NEGONE
00267  0 01 00250     64          BRU     ST5
00270  0 46 00014     65          XAB
00271  0 76 01317     66          LDA     DACHNS
00272  0 73 00044     67          SKG     SUM
00273  0 01 00250     68          BRU     ST5
00274  0 76 00026     69          LDA     NEGONE
00275  0 01 00305     70          BRU     ST5B
00276  0 53 00041     71  ST5A    SKN     DFLAG
00277  0 01 00301     72          BRU     *+2                 OK
00300  0 01 00250     73          BRU     ST5                 ERROR
00301  0 76 00042     74          LDA     CHARS
00302  0 70 01265     75          SKM     A                   TEST FOR ALL
00303  0 01 00250     76          BRU     ST5
00304  0 46 00003     77          CLR
00305  0 36 01325     78  ST5B    STB     POINT               SCAN
00306  0 36 01326     79          STB     CHNO                OUTPUT
00307  0 35 01342     80          STA     FA                  SET ALL FLAG
00310  0 35 01341     81          STA     FE
                      82  *
00311  1 00 01172     83  ST6     TYPE    HDG6
00312  1 02 00000     84          DECF                        FRACTIONAL INPUT, L
00313  0 41 00325     85          BRX     ST6A                TEST FOR R
00314  0 53 00041     86          SKN     DFLAG               DECIMAL ENTRY
00315  0 01 00317     87          BRU     ST6B                NO
00316  0 35 01324     88          STA     LOWERL
00317  1 02 00000     89  ST6B    DECF                        FRACTION INPUT, UPP
00320  0 41 00325     90          BRX     ST6A
00321  0 53 00041     91          SKN     DFLAG
00322  0 01 00335     92          BRU     STZ+1
00323  0 35 01323     93          STA     UPPERL
00324  0 01 00334     94          BRU     STZ                 RESET RANDOM
00325  0 53 00041     95  ST6A    SKN     DFLAG               TEST FOR DECIMAL
00326  0 01 00330     96          BRU     *+2                 INPUT
00327  0 01 00311     97          BRU     ST6
00330  0 76 00042     98          LDA     CHARS
00331  0 70 01257     99          SKM     R                   CHARACTER=R
00332  0 01 00311    100          BRU     ST6                 NO, RETURN
00333  0 46 00003    101          CLR                         YES, R
00334  0 36 01340    102  STZ     STB     RFLAG               SET RANDOM FLAG
00335  0 43 00652    103          BRM     BPTEST              TEST B.P.
00336  0 53 01341    104  DATCL   SKN     FE
00337  0 01 00343    105          BRU     CLALL               CLEAR
00340  0 76 01325    106  SINGLE  LDA     POINT
00341  0 43 00354    107          BRM     CLEAR
00342  0 01 01345    108          BRU     SCAN
```

```
00343  0 46 30003     109   CLALL  CLR                          ALL
00344  0 54 01317     110          SUB     DACHNS
00345  0 35 00056     111          STA     T1
00346  0 46 30003     112          CLR
00347  0 71 00056     113          LDX     T1                   COUNT
00350  0 43 00354     114          BRM     CLEAR                CLEAR CH. DATA
00351  0 55 00024     115          ADD     ONE                  INCREMENT CHANNEL
00352  0 41 00350     116          BRX     *-2                  LOOP
00353  0 01 01345     117          BRU     SCAN
                       118   *              DATA CLEAR
00354  0 00 00000     119   CLEAR  PZE
00355  0 35 00062     120          STA     TA1
00356  0 37 00061     121          STX     TX1
00357  0 43 00702     122          BRM     LOCATE
00360  0 55 01344     123          ADD     1B1                  INDEX
00361  0 54 01271     124          SUB     N24
00362  0 35 01337     125          STA     ENDAT
00363  0 71 01271     126          LDX     N24
00364  0 36 41337     127          STB*    ENDAT
00365  0 41 00364     128          BRX     *-1
00366  0 76 00025     129          LDA     SIGN                 SET MAX AND MIN
00367  0 77 37751     130          EAX     MAX-24               TO LIMITS
00370  0 35 41337     131          STA*    ENDAT
00371  0 55 00026     132          ADD     NEGONE
00372  0 77 37752     133          EAX     MIN-24
00373  0 35 41337     134          STA*    ENDAT
00374  0 76 00062     135          LDA     TA1
00375  0 71 00061     136          LDX     TX1
00376  0 51 00354     137          BRR     CLEAR
00377  0 76 00026     138   ST7    LDA     NEGONE
00400  0 75 01325     139          LDB     POINT
00401  0 53 01341     140          SKN     FE                   ALL
00402  0 46 30003     141          CLR                          YES
00403  0 35 01342     142          STA     FA
00404  0 36 01326     143          STB     CHNO
00405  1 00 01175     144          TYPE    HDG7                 'CHANNEL
00406  1 01 00000     145          DECI
00407  0 53 00047     146          SKN     AFLAG
00410  0 01 00421     147          BRU     ST7A
00411  0 53 00041     148          SKN     DFLAG
00412  0 01 00432     149          BRU     ST8
00413  0 46 00014     150          XAR
00414  0 76 01317     151          LDA     DACHNS               DA SIZE
00415  0 73 00044     152          SKG     SUM
00416  0 01 00377     153          BRU     ST7
00417  0 76 00026     154          LDA     NEGONE
00420  0 01 00430     155          BRU     SET7
00421  0 76 00042     156   ST7A   LDA     CHARS
00422  0 53 00041     157          SKN     DFLAG
00423  0 01 00425     158          BRU     *+2
00424  0 01 00377     159          BRU     ST7
00425  0 70 01265     160          SKM     A
00426  0 01 00377     161          BRU     ST7
00427  0 46 30003     162          CLR
```

```
00430  0 36 01326    163  SET7   STR    CHN0
00431  0 35 01342    164         STA    FA
00432  1 00 01201    165  ST8    TYPE   HDG8
00433  1 01 00000    166         DECI
00434  0 53 00047    167         SKN    AFLAG
00435  0 01 00441    168         BRU    ST8A
00436  0 53 00041    169         SKN    DFLAG
00437  0 01 00461    170         BRU    GAMMA
00440  0 01 00432    171         BRU    ST8
00441  0 76 00042    172  ST8A   LDA    CHARS
00442  0 70 01255    173         SKM    M                    TEST FOR M
00443  0 01 00446    174         BRU    *+3
00444  0 46 00014    175         XAR
00445  0 01 00450    176         BRU    *+3
00446  0 70 01256    177         SKM    D                    TEST FOR "D"
00447  0 01 00432    178         BRU    ST8
00450  0 35 00045    179         STA    FG                   SET FORMAT FLAG
00451  0 46 00003    180  GAMMA  CLR
00452  0 53 01342    181         SKN    FA
00453  0 35 01326    182         STA    CHN0
00454  0 53 00045    183         SKN    FG
00455  0 01 00507    184         BRU    SIGMA
00456  1 00 01204    185         TYPE   HDG9
00457  0 43 00714    186  GAMMA1 BRM    SCALE                SCALE CHAN. DATA
00460  0 76 01326    187         LDA    CHN0                 CONVERT CH. NO.
00461  0 02 20001    188         ROV                         TO DECIMAL
00462  1 72 00027    189         BID    23
00463  1 04 01261    190         INTG   TAB
00464  0 35 01243    191         STA    HDG11
00465  0 76 00063    192         LDA    MEAN
00466  1 03 01244    193         LIMB   HDG11+1
00467  0 55 01303    194         ADD    P16
00470  0 35 01245    195         STA    HDG11+2
00471  0 76 00064    196         LDA    STDEV
00472  1 03 01246    197         LIMB   HDG11+3
00473  1 00 01243    198         TYPE   HDG11
00474  0 43 00652    199  FASET  BRM    BPTEST
00475  0 53 01342    200         SKN    FA                   ALL FLAG
00476  0 01 00500    201         BRU    *+2
00477  0 01 00237    202         BRU    ST4
00500  0 61 01326    203         MIN    CHN0                 INCREMENT CHAN. NO.
00501  0 76 01317    204         LDA    DACHNS
00502  0 73 01326    205         SKG    CHN0
00503  0 01 00237    206         BRU    ST4
00504  0 53 00045    207         SKN    FG
00505  0 01 00507    208         BRU    SIGMA
00506  0 01 00457    209         BRU    GAMMA1
00507  0 76 01326    210  SIGMA  LDA    CHN0                 CHANNEL NUMBER
00510  0 02 20001    211         ROV
00511  1 72 00027    212         BID    23
00512  1 04 01262    213         INTG   CARRET
00513  0 35 01216    214         STA    HDG10+2
00514  0 76 01326    215         LDA    CHN0
00515  0 43 00702    216         BRM    LOCATE
```

```
00516  2 76 00000     217            LDA     N.2                     COUNT
00517  0 02 20001     218            ROV
00520  1 72 00027     219            BID     23
00521  1 04 01262     220            INTG    CARRET
00522  0 36 01220     221            STB     HDG10A+1
00523  0 35 01221     222            STA     HDG10A+2
00524  0 43 00714     223            BRM     SCALE
00525  2 76 00001     224            LDA     MAX.2
00526  1 03 01223     225            LIMB    HDG10B+1
00527  2 76 00002     226            LDA     MIN.2
00530  1 03 01226     227            LIMB    HDG10C+1
00531  0 76 00063     228            LDA     MEAN
00532  1 03 01233     229            LIMB    HDG10D+3
00533  0 76 00064     230            LDA     STDEV
00534  1 03 01240     231            LIMB    HDG10E+3
00535  1 00 01214     232            TYPE    HDG10
00536  2 77 00007     233            EAX     7.2
00537  0 76 01272     234            LDA     N8
00540  0 35 00057     235    STR     STA     T2
00541  0 75 00026     236            LDB     NEGONE
00542  2 76 00000     237            LDA     0.2
00543  0 70 00023     238            SKM     ZERO
00544  0 01 00546     239            BRU     *+2
00545  0 01 00561     240            BRU     CTEST
00546  0 02 20001     241            ROV
00547  1 72 00027     242            BID     23                      CONVERT COUNT
00550  1 04 01262     243            INTG    CARRET
00551  0 36 01246     244            STB     HDG11+3
00552  0 35 01247     245            STA     HDG11+4
00553  0 76 00057     246            LDA     T2                      CONVERT CHNO
00554  0 02 20001     247            ROV
00555  1 72 00027     248            BID     23
00556  1 04 01261     249            INTG    TAB
00557  0 35 01245     250            STA     HDG11+2
00560  1 00 01245     251            TYPE    HDG11+2                 OUTPUT LINE
00561  0 76 00057     252    CTEST   LDA     T2
00562  0 55 00024     253            ADD     ONE
00563  0 41 00564     254            BRX     *+1
00564  0 73 01300     255            SKG     P8
00565  0 01 00540     256            BRU     STR
00566  0 01 00474     257            BRU     FASET
                      258    *
                      259    *               DATA ACCUMULATION
                      260    *
00567  0 00 00000     261    ACCUM   PZE
00570  0 76 01326     262            LDA     CHNO
00571  0 43 00702     263            BRM     LOCATE
00572  2 61 00000     264            MIN     N.2                     INCREMENT COUNT
00573  0 46 30003     265            CLR
00574  0 76 01327     266            LDA     DATA                    ADC
00575  0 54 01330     267            SUB     EXPECT                  ADC-D/A
00576  0 14 01316     268            ETR     FIELD
00577  2 73 00001     269            SKG     MAX.2
00600  0 01 00602     270            BRU     *+2
```

```
00601  2 35 00001   271          STA     MAX,2
00602  2 73 00002   272          SKG     MIN,2
00603  2 35 00002   273          STA     MIN,2
00604  0 66 40040   274          RSH*    SIZE                    AT 13
00605  0 35 00057   275          STA     T2
00606  0 66 00012   276          RSH     10                      AT 23
00607  0 35 00056   277          STA     T1
00610  0 73 01300   278          SKG     P8                      INCREMENT
00611  0 01 00613   279          BRU     *+2                     DISTRIBUTION
00612  0 76 01300   280          LDA     P8                      TABLE
00613  0 73 01272   281          SKG     N8
00614  0 76 01272   282          LDA     N8
00615  0 55 01336   283          ADD     MINDIF
00616  0 35 00617   284          STA     *+1
00617  2 61 00017   285          MIN     DIF,2
00620  0 46 30003   286          CLR
00621  0 76 00056   287          LDA     T1
00622  0 73 01304   288          SKG     P63                     SET DEVIATION
00623  0 01 00625   289          BRU     *+2                     BANDWIDTH=64
00624  0 76 01304   290          LDA     P63
00625  0 73 01267   291          SKG     N64
00626  0 76 01270   292          LDA     N63
00627  0 66 00007   293          RSH     7
00630  0 36 00060   294          STR     T3
00631  0 46 00014   295          XAR                             COMPUTE X SQUARE
00632  0 75 00023   296          LDR     ZERO                    SET R=0
00633  0 64 00060   297          MUL     T3
00634  0 75 00023   298          LDR     ZERO
00635  0 46 00014   299          XAR
00636  3 30 00003   300          DPA     SUMXSQ,2
00637  2 35 00004   301          STA     SUMXSQ+1,2
00640  2 36 00003   302          STR     SUMXSQ,2
00641  0 46 30003   303          CLR
00642  0 76 00057   304          LDA     T2                      ACCUMULATE X
00643  0 73 00026   305          SKG     NEGONE
00644  0 75 00026   306          LDR     NEGONE
00645  0 46 00014   307          XAR
00646  3 30 00005   308          DPA     SUMX,2
00647  2 35 00006   309          STA     SUMX+1,2
00650  2 36 00005   310          STR     SUMX,2
00651  0 51 00567   311          BRR     ACCUM                   RETURN
                    312  *
                    313  *               BREAKPOINT TEST
                    314  *
00652  0 00 00000   315  BPTEST  PZE
00653  0 40 20400   316          BPT     1
00654  0 01 00660   317          BRU     BPTA
00655  0 40 20200   318          BPT     2
00656  0 01 00664   319          BRU     BPTB
00657  0 51 00652   320          BRR     BPTEST
00660  0 40 20400   321  BPTA    BPT     1
00661  0 01 00660   322          BRU     *-1
00662  0 02 00000   323          DISW                            DISCONNECT W
00663  0 01 00237   324          BRU     ST4
```

```
00664  0 40 20200     325  BPTB   BPT     2
00665  0 01 00664     326         BRU     *-1
00666  0 02 00000     327         DISW
00667  0 01 00377     328         BRU     ST7
                       329  *
                       330  *      RANDOM  NUMBER GENERATOR
                       331  *
00670  0 00 00000     332  RANDOM PZE
00671  0 46 30003     333         CLR
00672  0 76 00701     334         LDA     SEED
00673  0 67 20013     335         LCY     11
00674  0 55 00701     336         ADD     SEED
00675  0 55 00700     337         ADD     CONST
00676  0 35 00701     338         STA     SEED
00677  0 51 00670     339         BRR     RANDOM
00700  23416555       340  CONST  OCT     23416555
00701  0 00 00000     341  SEED   PZE
00702  0 00 00000     342  LOCATE PZE
00703  0 35 00055     343         STA     TEMP
00704  0 75 00023     344         LDB     ZERO
00705  0 67 00001     345         LSH     1
00706  0 55 00055     346         ADD     TEMP
00707  0 67 00003     347         LSH     3
00710  0 55 01335     348         ADD     INDEX
00711  0 35 00055     349         STA     TEMP
00712  0 71 00055     350         LDX     TEMP
00713  0 51 00702     351         BRR     LOCATE
                       352  *
00714  0 00 00000     353  SCALE  PZE
00715  0 76 01326     354         LDA     CHNO
00716  0 43 00702     355         BRM     LOCATE
00717  2 76 00006     356         LDA     SUMX+1,2        COMPUTE MEAN
00720  2 75 00005     357         LDB     SUMX,2
00721  0 67 00001     358         LSH     1
00722  2 65 00000     359         DIV     N,2
00723  0 35 00063     360         STA     MEAN
00724  0 75 00023     361         LDB     ZERO
00725  0 64 00063     362         MUL     MEAN            MEAN SQUARE
00726  0 35 00054     363         STA     MEANSQ+1
00727  0 36 00053     364         STB     MEANSQ
00730  2 76 00004     365         LDA     SUMXSQ+1,2
00731  2 75 00003     366         LDB     SUMXSQ,2
00732  2 65 00000     367         DIV     N,2
00733  0 66 00015     368         RSH     13
00734  1 31 00053     369         DPS     MEANSQ
00735  1 35 00000     370         DSQ
00736  0 73 00026     371         SKG     NEGONE
00737  0 46 30003     372         CLR
00740  0 35 00064     373         STA     STDEV           STANDARD DEVIATION
00741  0 46 30003     374         CLR
00742  0 76 00063     375         LDA     MEAN
00743  0 67 40040     376         LSH*    SIZE
00744  0 35 00063     377         STA     MEAN
00745  0 51 00714     378         BRR     SCALE
```

```
                          379   *
                          380   *       TYPEWRITER OUTPUT. ALPHA NUMERIC
                          381   *
                          382   TYPE    POPO    10000000
00746   0 37 00061        383             STX     TX1
00747   0 40 21000        384             BRTW                            BUFFER READY
00750   0 01 00747        385             BRU     *-1
00751   0 02 02641        386             TYPW    1,4                     ENABLE OUTPUT
00752   0 75 00026        387             LDB     NEGONE
00753   0 71 00000        388             LDX     0
00754   2 71 00000        389             LDX     0,2
00755   2 12 00000        390             MIW     0,2                     OUTPUT
00756   0 41 00757        391             BRX     *+1                     INCREMENT LOC
00757   2 76 00000        392             LDA     0,2                     NEXT WORD TEST
00760   0 70 01250        393             SKM     6BITS                   DONE
00761   0 01 00755        394             BRU     *-4                     OUTPUT AGAIN
00762   0 71 00061        395             LDX     TX1
00763   0 02 14000        396             TOPW                            TERMINATE OUTPUT
00764   0 51 00000        397             BRR     0
                          398   *
                          399   *               DECIMAL INPUT
                          400   *
                          401   DECI    POPO    10100000
00765   0 76 00026        402             LDA     NEGONE                  SET OFLAG
00766   0 01 00770        403             BRU     SIFG
                          404   DECF    POPO    10200000
00767   0 46 30003        405             CLR
00770   0 35 00052        406   SIFG      STA     OFLAG                   RESET OFLAG
00771   0 76 00000        407             LDA     0
00772   0 35 00060        408             STA     T3
00773   0 40 21000        409             BRTW                            BUFFER READY
00774   0 01 00773        410             BRU     *-1
00775   0 71 01266        411             LDX     N10000                  WAIT 40 MS
00776   0 41 00776        412             BRX     *
00777   0 02 02001        413             RKBW    1,1
01000   0 71 01273        414   TEMTBZ    LDX     N4
01001   0 46 30003        415             CLR
01002   0 76 00026        416             LDA     NEGONE
01003   2 36 00046        417             STA     FG,2
01004   2 35 00052        418             STA     OFLAG,2
01005   0 41 01003        419             BRX     *-2
01006   0 76 01275        420             LDA     N6
01007   0 35 00056        421             STA     T1
01010   0 32 00057        422   WIMCH     WIM     T2                      INPUT CHAR
01011   0 75 01250        423             LDB     6BITS
01012   0 76 00057        424             LDA     T2
01013   0 14 01250        425             ETR     6BITS
01014   0 71 01274        426             LDX     N5
01015   2 -4 L1265        427             SKM     CHTABL+5,2
01016   0 41 01015        428             BRX     *-1
01017   2 01 01025        429             BRU     *+6,2
01020   0 01 01000        430             BRU     TEMTBZ                  /
01021   0 01 01022        431             BRU     *+1                     *
01022   0 01 01060        432             BRU     TERMIN                  1
```

```
01023  0 01 01046    433           BRU     JPOINT          .
01024  0 01 01056    434           BRU     JMINUS          -
01025  0 73 01301    435           SKG     P9              DECIMAL
01026  0 01 01032    436           BRU     *+4
01027  0 35 00042    437           STA     CHARS
01030  0 35 00047    438           STA     AFLAG
01031  0 01 01010    439           BRU     WIMCH
01032  0 53 00056    440           SKN     T1
01033  0 01 01010    441           BRU     WIMCH
01034  0 61 00056    442           MIN     T1              TEST COUNT
01035  0 55 00043    443           ADD     10SUM
01036  0 35 00044    444           STA     SUM
01037  0 67 00002    445           LSH     2
01040  0 55 00044    446           ADD     SUM
01041  0 67 00001    447           LSH     1
01042  0 35 00043    448           STA     10SUM
01043  0 76 00026    449           LDA     NEGONE
01044  0 35 00041    450           STA     DFLAG
01045  0 01 01010    451           BRU     WIMCH
01046  0 53 00052    452   JPOINT  SKN     OFLAG           DECIMAL POINT
01047  0 01 01051    453           BRU     *+2
01050  0 01 01007    454           BRU     WIMCH-1
01051  0 35 00050    455           STA     PFLAG
01052  0 46 30003    456           CLR
01053  0 35 00043    457           STA     10SUM
01054  0 35 00044    458           STA     SUM
01055  0 01 01006    459           BRU     WIMCH-2
01056  0 35 00061    460   JMINUS  STA     MINFG
01057  0 01 01010    461           BRU     WIMCH
01060  0 53 00052    462   TERMIN  SKN     OFLAG
01061  0 01 01076    463           BRU     DIVIDE
01062  0 46 30003    464           CLR
01063  0 54 00044    465           SUB     SUM
01064  0 53 00061    466           SKN     MINFG
01065  0 01 01067    467           BRU     *+2
01066  0 76 00044    468           LDA     SUM
01067  0 35 00044    469   STASUM  STA     SUM
01070  0 75 00026    470           LDB     NEGONE          MASK
01071  0 71 00023    471           LDX     ZERO            ALPHA FLAG
01072  0 53 00047    472           SKN     AFLAG
01073  0 71 01276    473           LDX     N2
01074  0 02 00000    474           DISW
01075  0 51 00060    475           BRP     T3
01076  0 46 30003    476   DIVIDE  CLR                     FRACTION
01077  0 53 00060    477           SKN     PFLAG
01100  0 01 01102    478           BRU     *+2
01101  0 01 01067    479           BRU     STASUM
01102  0 76 00044    480           LDA     SUM
01103  0 71 00056    481           LDX     T1
01104  2 65 01313    482           DIV     POWER+6,2
01105  0 35 00044    483           STA     SUM
01106  0 01 01062    484           BRU     TERMIN+2
                     485   *
                     486   *               CONVERT AND STORE
```

```
                        *
                        LIMB    POPD    10300000                CONVERT TO DECIMAL
01107   0 37 00061              STX     TX1
01110   0 71 00000              LDX     0
01111   0 37 00062              STX     TA1
01112   1 72 00015              BID     13
01113   0 14 01252              ETR     18BITS
01114   0 55 01262              ADD     CARRET                  CARRAGE RETURN
01115   0 71 00062              LDX     TA1
01116   2 71 00000              LDX     0,2
01117   2 35 00001              STA     1,2
01120   2 36 00000              STB     0,2
01121   0 71 00061              LDX     TX1
01122   0 51 00062              BRR     TA1
                        *
                        *               DECIMAL TO DECIMAL INTEGER
                        *
                        INTG    POPD    10400000
01123   0 53 00000              SKN     0
01124   0 01 01127              BRU     *+3
01125   0 76 01332              LDA     OVFL+1
01126   0 75 01331              LDB     OVFL
01127   0 36 00056              STB     T1
01130   0 75 01250              LDB     6BITS
01131   0 70 01263              SKM     PERIOD
01132   0 01 01144              BRU     INTG1
01133   0 73 01333              SKG     ZTEST
01134   0 73 01334              SKG     ZTEST+1
01135   0 01 01140              BRU     *+3
01136   0 54 01263              SUB     PERIOD
01137   0 67 20006              LCY     6
01140   0 14 01252              ETR     18BITS
01141   0 55 40000              ADD*    0
01142   0 75 00056              LDB     T1
01143   0 51 00000              BRR     0
01144   0 14 01252      INTG1   ETR     18BITS
01145   0 55 01254              ADD     SPACE
01146   0 75 00056              LDB     T1
01147   0 66 20006              RCY     6
01150   0 01 01127              BRU     INTG+4
01151   52246121        HDG1    BCI     4,1D/A CHANNELS
01152   12233021
01153   45452543
01154   62121212
01155   00000077                OCT     77
01156   52212423        HDG2    BCI     3,1ADC SIZE
01157   12623171
01160   25121212
01161   00000077                OCT     77
01162   52446712        HDG3    BCI     3,1MX CHANNEL
01163   23302145
01164   45254312
01165   00000077                OCT     77
01166   52622321        HDG4    BCI     3,1SCAN COUNT
```

```
01167  45122346
0[illegible]0  64456312
01171  00000077        534             OCT     77
01172  52433144        535    HDG6     BCI     2,1LIMITS
01173  31636212
01174  00000077        536             OCT     77
01175  52233021        537    HDG7     BCI     3,1CHANNEL
01176  45452543
01177  12121212
01200  00000077        538             OCT     77
01201  52264651        539    HDG8     BCI     2,1FORMAT
01202  44216312
01203  00000077        540             OCT     77
01204  52233021        541    HDG9     BCI     7,1CHANNEL*MEAN BIAS*STD DEV 1
01205  45452543
01206  72442521
01207  45122231
01210  21627262
01211  63241224
01212  25651252
01213  00000077        542             OCT     77
01214  52233021        543    HDG10    BCI     3,1CHANNEL
01215  45452543
01216  12121212
01217  62232145        544    HDG10A   BCI     3,SCAN
01220  12121212
01[illegible]1  12121212
01[illegible]2  44216712        545    HDG10B   BCI     3,MAX
01223  12121212
01224  12121212
01225  44314512        546    HDG10C   BCI     3,MIN
01226  12121212
01227  12121212
01230  44252145        547    HDG10D   BCI     5,MEAN BIAS
01231  12223121
01232  62121212
01233  12121212
01234  12121212
01235  62632412        548    HDG10E   BCI     5,STD DEV
01236  24256512
01237  12121212
01240  12121212
01241  12121212
01242  00000077        549             OCT     77
01243  12121212        550    HDG11    BCI     5,
01244  12121212
01245  12121212
01246  12121212
01247  12121212
01250  00000077        551    6BITS    OCT     77
01251  0 01 00200      552    RESTRT   BRU     ST1
            00000      553    N        BOOL    0
            00001      554    MAX      BOOL    1
            00002      555    MIN      BOOL    2
```

```
          00003     556    SUMXSQ  BOOL    3
          00005     557    SUMX    BOOL    5
          00017     558    DIF     BOOL    17
          00023     559    ZERO    BOOL    23
          00024     560    ONE     BOOL    24
          00025     561    SIGN    BOOL    25
          00026     562    NEGONE  BOOL    26
          00040     563    SIZE    BOOL    40
          00041     564    DFLAG   BOOL    41
          00042     565    CHARS   BOOL    42
          00043     566    10SUM   BOOL    43
          00044     567    SUM     BOOL    44
          00045     568    FG      BOOL    45
          00047     569    AFLAG   BOOL    47
          00050     570    PFLAG   BOOL    50
          00051     571    MINFG   BOOL    51
          00052     572    0FLAG   BOOL    52
          00053     573    MEANSQ  BOOL    53
          00055     574    TEMP    BOOL    55
          00056     575    T1      BOOL    56
          00057     576    T2      BOOL    57
          00060     577    T3      BOOL    60
          00061     578    TX1     BOOL    61
          00062     579    TA1     BOOL    62
          00063     580    MEAN    BOOL    63
          00064     581    STDEV   BOOL    64
01252     77777700  582    18BITS  OCT     77777700
01253     00002000  583    14BIT   OCT     2000
01254     00000012  584    SPACE   OCT     12
01255     00000044  585    M       OCT     44
01256     00000024  586    D       OCT     24
01257     00000051  587    R       OCT     51
01260     00000061  588    CHTABL  OCT     61                      /
01261     00000072  589    TAB     OCT     72                      *
01262     00000052  590    CARRET  OCT     52                      !
01263     00000033  591    PERIOD  OCT     33                      .
01264     00000040  592            OCT     40                      -
01265     00000021  593    A       OCT     21
01266     77754360  594    N10000  DEC     -10000
01267     77777700  595    N64     DEC     -64
01270     77777701  596    N63     DEC     -63
01271     77777750  597    N24     DEC     -24
01272     77777770  598    N8      DEC     -8
01273     77777774  599    N4      DEC     -4
01274     77777773  600    N5      DEC     -5
01275     77777772  601    N6      DEC     -6
01276     77777776  602    N2      DEC     -2
01277     00000006  603    P6      DEC     6
01300     00000010  604    P8      DEC     8
01301     00000011  605    P9      DEC     9
01302     00000016  606    P14     DEC     14
01303     00000020  607    P16     DEC     16
01304     00000077  608    P63     DEC     63
01305     00000001  609    POWER   DEC     1,10,100,1000,10000,100000,1000000
```

```
01306  00000012
01307  00000144
01310  00001750
01311  00023420
01312  00303240
01313  03641100
01314  0 00 00000     610   ADCSIZ  PZE
01315  0 00 00000     611   INCNO   PZE
01316  0 00 00000     612   FIELD   PZE
01317  0 00 00000     613   DACHNS  PZE
01320  0 00 00000     614   MXLOC   PZE
01321  0 00 00000     615   SCNO    PZE
01322  0 00 00000     616   SCN01   PZE
01323  0 00 00000     617   UPPERL  PZE
01324  0 00 00000     618   LOWERL  PZE
01325  0 00 00000     619   POINT   PZE
01326  0 00 00000     620   CHNO    PZE
01327  0 00 00000     621   DATA    PZE
01330  0 00 00000     622   EXPECT  PZE
01331  63464612       623   OVFL    BCI       2,T99 LRG.
01332  43512733
01333  12122233       624   ZTEST   OCT       12122233
01334  12121232       625           OCT       12121232
01335  0 00 02377     626   INDEX   PZE       -32*24+2048-1
01336  2 61 00017     627   MINDIF  MIN       DIF,2
01337  0 00 00000     628   ENDAT   PZE
01340  0 00 00000     629   RFLAG   PZE
01341  0 00 00000     630   FE      PZE
01342  0 00 00000     631   FA      PZE
01343  00002000       632   014     OCT       2000
01344  20000000       633   181     OCT       20000000
```

```
                                  PAGE
                          *
                          * 920 SCAN, CLOSED LOOP ANALOG STATISTICAL TEST PROG.
                          *
01345  0 02 30000          SCAN   EOM    30000
01346  0 76 01324                 LDA    LOWERL          LOWER LIMIT
01347  0 35 01330                 STA    EXPECT
01350  0 43 01427                 BRM    EOMCMP          COMPUTE D/A EOM
01351  0 40 20400          SCAN1  BPT    1               B.P. 1 TEST
01352  0 01 00660                 BRU    BPTA
01353  0 40 20200                 BPT    2               B.P. 2 TEST
01354  0 01 00664                 BRU    BPTB
01355  0 02 33012          EOMA   EOM    33012           DA OUTPUT SELECT
01356  0 13 01330                 POT    EXPECT          OUTPUT
01357  0 20 00000                 NOP                    DELAY
01360  0 02 33002                 EOM    33002           MX INPUT SELECT
01361  0 13 01441                 POT    CHNOA
01362  0 67 20020                 LCY    16              ADC CONVERT DELAY
01363  0 02 33001                 EOM    33001           INPUT
01364  0 33 01327                 PIN    DATA
01365  0 43 00567                 BRM    ACCUM           ACCUMULATE DATA
01366  0 53 01341                 SKN    FE
01367  0 01 01405                 BRU    SCAN2
01370  0 61 01322          SCAN5  MIN    SCNO1
01371  0 53 01322                 SKN    SCNO1
01372  0 01 00377                 BRU    ST7             DONE, GO TO OUTPUT
01373  0 53 01340                 SKN    RFLAG
01[illegible]  0 01 01417         BRU    SCAN3           TO RANDOM
01375  0 76 01315                 LDA    INCNO           RAMP EXPECTED
01376  0 55 01330                 ADD    EXPECT
01377  0 73 01323                 SKG    UPPERL          TEST UPPER LIMIT
01400  0 01 01403                 BRU    *+3             NOT THERE
01401  0 76 01324                 LDA    LOWERL          RESET
01402  0 14 01316                 ETR    FIELD
01403  0 35 01330                 STA    EXPECT          RESTORE
1404   0 01 01351                 BRU    SCAN1
1405   0 61 01326          SCAN2  MIN    CHNO            TO NEXT CHANNEL
1406   0 76 01317                 LDA    DACHNS
1407   0 73 01326                 SKG    CHNO
1410   0 01 01423                 BRU    SCAN4
1411   0 61 01355                 MIN    EOMA
1412   0 60 01441                 SKR    CHNOA           REDUCE BY ONE
1413   0 01 01414                 BRU    *+1
1414   0 53 01340                 SKN    RFLAG           IS IT RANDOM
1415   0 01 01417                 BRU    *+2             YES
1416   0 01 01351                 BRU    SCAN1
1417   0 43 00670          SCAN3  BRM    RANDOM          RANDOM NUMBER GEN.
1420   0 14 01316                 ETR    FIELD
421    0 35 01330                 STA    EXPECT          OUTPUT VALUE
422    0 01 01351                 BRU    SCAN1           B.P. TESTS
423    0 46 30003          SCAN4  CLR                    RESET CH. NO. AND EOM
424    0 35 01326                 STA    CHNO
42[illegible]  0 43 01427         BRM    EOMCMP
42[illegible]  0 01 01370         BRU    SCAN5           TEST COUNT OF SCAN
```

```
01427  0 00 00000     688  EGMCMP  PZE
01430  0 76 01326     689          LDA     CHNG
01431  0 55 01440     690          ADD     EGM1
01432  0 35 01355     691          STA     EGMA            D/A EGM
01433  0 76 00026     692          LDA     NEGGNE
01434  0 54 01326     693          SUB     CHNG
01435  0 54 01320     694          SUB     MXLOC
01436  0 35 01441     695          STA     CHNGA           MX CHANNEL
01437  0 51 01427     696          BRE     EGMCMP          RETURN
01440  0 02 33012     697  EGM1    EGM     33012
01441  0 00 00000     698  CHNGA   PZE
               00000  699          END
```

18BITS	01252	ADCSIZ	01314	BPTEST	00652	CARRET	01262
CTABL	01260	DACHNS	01317	DIVIDE	01076	E6MCMP	01427
EXPECT	01330	GAMMA1	00457	HDG10A	01217	HDG10B	01222
HDG10C	01225	HDG10D	01230	HDG10E	01235	JMINUS	01056
JPOINT	01046	LOCATE	00702	LOWERL	01324	MEANSQ	00053
MINDIF	01336	N10000	01266	NEGONE	00026	PERIOD	01263
RANDOM	00670	RESTRT	01251	SINGLE	00340	STASUM	01067
SUMXSQ	00003	TEMTBZ	01000	TERMIN	01060	UPPERL	01323
10SUM	00043	14BIT	01253	6BITS	01250	ACCUM	00567
AFLAG	00047	CHARS	00042	CHNOA	01441	CLALL	00343
CLEAR	00354	CONST	00700	CTEST	00561	DATCL	00336
DFLAG	00041	ENDAT	01337	FASET	00474	FIELD	01316
GAMMA	00451	HDG10	01214	HDG11	01243	INCNO	01315
INDEX	01335	INTG1	01144	MINFG	00051	MXLOC	01320
NFLAG	00052	PFLAG	00050	POINT	01325	POWER	01305
RFLAG	01340	SCALE	00714	SCAN1	01351	SCAN2	01405
SCAN3	01417	SCAN4	01423	SCAN5	01370	SCNO1	01322
SIGMA	00507	SPACE	01254	STDEV	00064	WIMCH	01010
ZTEST	01333	BPTA	00660	BPTB	00664	CHNO	01326
DATA	01327	DECF	00767	DECI	00765	E6M1	01440
E6MA	01355	HDG1	01151	HDG2	01156	HDG3	01162
HDG4	01166	HDG6	01172	HDG7	01175	HDG8	01201
HDG9	01204	INTG	01123	LIMB	01107	MEAN	00063
OVFL	01331	SCAN	01345	SCNO	01321	SEED	00701
SET7	00430	SIFG	00770	SIGN	00025	SIZE	00040
ST1A	00202	ST5A	00276	ST5O	00305	ST6A	00325
ST6B	00317	ST7A	00421	ST8A	00441	SUMX	00005
TEMP	00055	TYPE	00746	ZERO	00023	191	01344
DIF	00017	MAX	00001	MIN	00002	N24	01271
N63	01270	N64	01267	O14	01343	ONE	00024
P14	01302	P16	01303	P63	01304	ST1	00200
ST2	00210	ST3	00231	ST4	00237	ST5	00250
ST6	00311	ST7	00377	ST8	00432	STR	00540
STZ	00334	SUM	00044	TA1	00062	TA8	01261
TX1	00061	FA	01342	FE	01341	FG	00045
N2	01276	N4	01273	N5	01274	N6	01275
N8	01272	P6	01277	P8	01300	P9	01301
T1	00056	T2	00057	T3	00060	A	01265
D	01256	M	01255	N	00000	R	01257